7-24-92
Vol. 57 No. 143
Pages 32879-33096

federal register

Friday
July 24, 1992

FEDERAL REGISTER Published daily, Monday through Friday, (not published on Saturdays, Sundays, or on official holidays), by the Office of the Federal Register, National Archives and Records Administration, Washington, DC 20408, under the Federal Register Act (49 Stat. 500, as amended; 44 U.S.C. Ch. 15) and the regulations of the Administrative Committee of the Federal Register (1 CFR Ch. I). Distribution is made only by the Superintendent of Documents, U.S. Government Printing Office, Washington, DC 20402.

The **Federal Register** provides a uniform system for making available to the public regulations and legal notices issued by Federal agencies. These include Presidential proclamations and Executive Orders and Federal agency documents having general applicability and legal effect, documents required to be published by act of Congress and other Federal agency documents of public interest. Documents are on file for public inspection in the Office of the Federal Register the day before they are published, unless earlier filing is requested by the issuing agency.

The seal of the National Archives and Records Administration authenticates this issue of the **Federal Register** as the official serial publication established under the Federal Register Act. 44 U.S.C. 1507 provides that the contents of the **Federal Register** shall be judicially noticed.

The **Federal Register** will be furnished by mail to subscribers for $340 per year in paper form; $195 per year in microfiche form; or $37.500 per year for the magnetic tape. Six-month subscriptions are also available at one-half the annual rate. The charge for individual copies in paper or microfiche form is $1.50 for each issue, or $1.50 for each group of pages as actually bound, or $175.00 per magnetic tape. Remit check or money order, made payable to the Superintendent of Documents. Mail to: New Orders, Superintendent of Documents, P.O. Box 371954, Pittsburgh, PA 15250–7954, or charge to your GPO Deposit Account or VISA or Mastercard.

There are no restrictions on the republication of material appearing in the **Federal Register.**

How To Cite This Publication: Use the volume number and the page number. Example: 57 FR 12345.

SUBSCRIPTIONS AND COPIES

PUBLIC

Subscriptions:

Paper or fiche	202–783–3238
Magnetic tapes	512–2235
Problems with public subscriptions	512–2303

Single copies/back copies:

Paper or fiche	783–3238
Magnetic tapes	512–2235
Problems with public single copies	512–2457

FEDERAL AGENCIES

Subscriptions:

Paper or fiche	523–5240
Magnetic tapes	512–2235
Problems with Federal agency subscriptions	523–5243

For other telephone numbers, see the Reader Aids section at the end of this issue.

Contents

Federal Register
Vol. 57, No. 143
Friday, July 24, 1992

Administrative Conference of the United States
RULES
Recommendations:
Administrative practice and procedure; correction, 32881

Agency for Health Care Policy and Research
NOTICES
Meetings:
Clinical practice guidelines development—
Low back problems, 32991
Medical review criteria, standards, and performance measures, methods of deriving and assessing, 32992

Agency for Toxic Substances and Disease Registry
NOTICES
Grants and cooperative agreements; availability, etc.:
State-based surveillance on human exposure to hazardous substances in environment and adverse health outcomes, 32993

Agriculture Department
See Animal and Plant Health Inspection Service
See Foreign Agricultural Service
See Forest Service
See Rural Electrification Administration
See Rural Telephone Bank
NOTICES
Agency information collection activities under OMB review, 32963

Animal and Plant Health Inspection Service
NOTICES
Environmental statements; availability, etc.:
Genetically engineered organisms; field test permits—
Tobacco, 32963
Genetically engineered organisms for release into environment; permit applications, 32964

Antitrust Division
NOTICES
National cooperative research notifications:
Bell Communications Research, Inc., 33011
Brass & Bronze Environmental Research Corp., 33012
Cable Television Laboratories, Inc., 33012
Cable Television Laboratories, Inc., et al., 33012
Southwest Research Institute, 33013

Army Department
See Engineers Corps

Arts and Humanities, National Foundation
See National Foundation on the Arts and the Humanities

Blind and Other Severely Handicapped, Committee for Purchase From
See Committee for Purchase From the Blind and Other Severely Handicapped

Centers for Disease Control
NOTICES
Grants and cooperative agreements; availability, etc.:
Human immunodeficiency virus epidemiological surveillance studies, 32994
Meetings:
Vital and Health Statistics National Committee, 32996

Coast Guard
NOTICES
Meetings:
Lower Mississippi River Waterways Analysis and Management Study (WAMS); hearings, 33031

Commerce Department
See International Trade Administration
See National Oceanic and Atmospheric Administration
NOTICES
Agency information collection activities under OMB review, 32968

Committee for Purchase From the Blind and Other Severely Handicapped
NOTICES
Procurement list; additions and deletions, 32975, 32976

Defense Department
See Engineers Corps
NOTICES
Federal Acquisition Regulation (FAR):
Agency information collection activities under OMB review, 32978

Drug Enforcement Administration
PROPOSED RULES
Schedules of controlled substances:
Aminorex, 32937

Education Department
NOTICES
Agency information collection activities under OMB review, 32978
Grants and cooperative agreements; availability, etc.:
Fulbright-Hays—
Faculty research abroad and doctoral dissertation research abroad programs, 32979
Training personnel for education of individuals with disabilities programs, 33068
Vocational rehabilitation services for individuals with severe handicaps; hearing research center, 33062
Meetings:
National Assessment Governing Board, 32979

Employment and Training Administration
RULES
Alien crewmembers for longshore activities in U.S. ports; attestations by employers
Correction, 32894
NOTICES
Adjustment assistance:
Cheyenne Petroleum Co., 33014
Fiber Materials, Inc., 33016
Intelligraphics, Inc., 33014
Kerr-McGee Corp., 33014
Mobil Exploration & Producing U.S., Inc., et al., 33015

National-Oilwell, 33015
Signetics Co., 33015
Sunshine Shake & Shingle Co. et al., 33016
Emergency unemployment compensation program:
Extended benefit periods; changes, 33017

Employment Standards Administration
See Wage and Hour Division
NOTICES
Minimum wages for Federal and federally-assisted construction; general wage determination decisions, 33018

Energy Department
See Energy Information Administration
See Federal Energy Regulatory Commission
See Hearings and Appeals Office, Energy Department
NOTICES
Grant and cooperative agreement awards:
Jackson State University et al., 32980

Energy Information Administration
NOTICES
Agency information collection activities under OMB review, 32980, 32981

Engineers Corps
NOTICES
Environmental statements; availability, etc.:
Milwaukee metropolitan area, WI, 32977

Environmental Protection Agency
RULES
Water pollution control:
Surface water toxics control program and water quality planning and management program, 33040
PROPOSED RULES
Water pollution control:
Clean Water Act—
National pollutant discharge elimination system: surface water toxics control program, 33051
NOTICES
Environmental statements; availability, etc.:
Agency statements—
Comment availability, 32986
Weekly receipts, 32987
Pesticide programs:
Reregistration eligibility documents availability [**Editorial note:** These documents, which appear on pages 32530, 32534, and 32538 of the **Federal Register** of July 22, 1992, were incorrectly indexed in that issue's table of contents.]
Sandoz Agro, Inc.—
Genetically altered microbial pesticides; field test [**Editorial note:** This document, which appears on page 32542 of the **Federal Register** of July 22, 1992, was incorrectly indexed in that issue's table of contents.]
Privacy Act:
Systems of records, 32988,
Toxic and hazardous substances control:
Premanufacture notices receipts, 32988, 32989

Executive Office of the President
See Presidential Documents

Farm Credit Administration
NOTICES
Meetings; Sunshine Act, 33037

Federal Aviation Administration
RULES
Transition areas, 32890

Federal Emergency Management Agency
RULES
Flood elevation determinations:
Arizona et al., 32899
California et al., 32901
PROPOSED RULES
Flood elevation determinations:
Georgia et al., 32940
NOTICES
Radiological emergency planning and preparedness document for transportation accidents; availability, 33094

Federal Energy Regulatory Commission
RULES
Natural gas companies (Natural Gas Act):
Vehicular natural gas sales, 32890

Federal Highway Administration
NOTICES
Environmental statements; notice of intent:
Wood County et al., WI, 33032

Federal Reserve System
NOTICES
Meetings; Sunshine Act, 33037
Applications, hearings, determinations, etc.:
Benner, Mildred M., et al., 32990
Firstar Corp., 32990
Meridian Bancorp, Inc., et al., 32991

Fish and Wildlife Service
NOTICES
Stone Lakes National Wildlife Refuge, CA; establishment, 33007

Food and Drug Administration
RULES
Animal drugs, feeds, and related products:
Sterile penicillin G procaine suspension, 32895
NOTICES
Meetings:
Advisory committees, panels, etc., 32996

Foreign Agricultural Service
NOTICES
Import quotas and fees:
Condensed milk from Denmark; country of origin quota adjustment, 32965
Dairy import licenses, 32965

Forest Service
NOTICES
Environmental statements; availability, etc.:
Idaho Panhandle National Forests, ID, 32966
Meetings:
Mount St. Helens Scientific Advisory Board, 32967
Newberry National Volcanic Monument Advisory Council, 32967

General Services Administration
NOTICES
Federal Acquisition Regulation (FAR):
Agency information collection activities under OMB review, 32978

Health and Human Services Department
See Agency for Health Care Policy and Research
See Agency for Toxic Substances and Disease Registry
See Centers for Disease Control
See Food and Drug Administration
See National Institutes of Health
See Public Health Service
See Social Security Administration

Health Resources and Services Administration
See Public Health Service

Hearings and Appeals Office, Energy Department
NOTICES
Cases filed, 32981
Special refund procedures; implementation, 32982

Housing and Urban Development Department
NOTICES
Grants and cooperative agreements; availability, etc.:
Facilities to assist homeless—
Excess and surplus Federal property, 33000

Indian Affairs Bureau
NOTICES
Irrigation projects; operation and maintenance charges:
Fort Hall Irrigation Project, ID, 33001
Tribal-State Compacts approval; Class III (casino) gambling:
Tulalip Tribes of Washington, 33096

Interior Department
See Fish and Wildlife Service
See Indian Affairs Bureau
See Land Management Bureau
See Mines Bureau
See Reclamation Bureau
See Surface Mining Reclamation and Enforcement Office

International Trade Administration
NOTICES
Antidumping:
Antifriction bearings, other than tapered roller bearings, and parts thereof from France et al., 32969
Countervailing duties:
Steel products from Austria et al., 32970
Scope rulings; list, 32973

Interstate Commerce Commission
RULES
Motor carriers:
Lease and interchange of vehicles; written lease requirements, 32905
NOTICES
Environmental statements; availability, etc.:
Tongue River Railroad Co., 33010
Railroad operation, acquisition, construction, etc.:
Soo Line Railroad Co. et al., 33010
Railroad services abandonment:
CSX Transportation, Inc., 33011

Justice Department
See Antitrust Division
See Drug Enforcement Administration
See Parole Commission

Labor Department
See Employment and Training Administration
See Employment Standards Administration
See Occupational Safety and Health Administration
See Pension and Welfare Benefits Administration
See Wage and Hour Division
PROPOSED RULES
Farm labor protective statutes; coordinated enforcement, 32939
NOTICES
Agency information collection activities under OMB review, 33013

Land Management Bureau
NOTICES
Environmental statements; availability, etc.:
Liberty County, MT; hardrock mineral exploration work, 33003
Meetings:
Las Vegas District Advisory Council, 33003
Richfield District Grazing Advisory Board, 33003
Roswell District Grazing Advisory Board, 33004
Realty actions; sales, leases, etc.:
North Dakota, 33004
Recreational management restrictions, etc.:
Slickrock Emergency Planning Area et al., UT; travel, camping, fire, and woodcutting restrictions, 33005
Withdrawal and reservation of lands:
Oregon, 33005
Washington, 33005, 33006

Merit Systems Protection Board
RULES
Organization, functions, and authority delegations:
St. Louis Regional Office; address change, 32881

Mines Bureau
NOTICES
Agency information collection activities under OMB review, 33007

National Aeronautics and Space Administration
NOTICES
Federal Acquisition Regulation (FAR):
Agency information collection activities under OMB review, 32978

National Commission on America's Urban Families
NOTICES
Meetings, 33021

National Credit Union Administration
NOTICES
Agency information collection activities under OMB review, 33021

National Foundation on the Arts and the Humanities
NOTICES
Agency information collection activities under OMB review, 33022

National Highway Traffic Safety Administration
RULES
Motor vehicle safety standards:
Occupant crash protection—
Seat belt assembly anchorages, 32902
PROPOSED RULES
Motor vehicle safety standards:
Lamps, reflective devices, and associated equipment—
Replaceable bulb headlamp systems, 32942

National Institutes of Health
NOTICES
Meetings:
Research Grants Division, 32997

National Oceanic and Atmospheric Administration
RULES
Fishery conservation and management:
Atlantic mackerel, squid, and butterfish, 32923
Bering Sea and Aleutian Islands groundfish, 32925
Ocean salmon off coasts of Washington, Oregon, and California, 32924
Pacific Coast groundfish, 32924
Tuna, Atlantic bluefin fisheries, 32905
PROPOSED RULES
Fishery conservation and management:
Gulf of Mexico and South Atlantic spiny lobster, 32956
Western Pacific pelagic, 32952
NOTICES
Meetings:
Gulf of Mexico Fishery Management Council Workshops, 32975

National Science Foundation
NOTICES
Agency information collection activities under OMB review, 33022

Nuclear Regulatory Commission
NOTICES
Meetings:
Reactor Safeguards Advisory Committee, 33022, 33023
Reactor Safeguards Advisory Committee et al. Proposed schedule, 33023
Applications, hearings, determinations, etc.:
Arizona Public Service Co. et al., 33025

Occupational Safety and Health Administration
NOTICES
State plans; standards approval, etc.:
Wyoming, 33017

Parole Commission
NOTICES
Meetings; Sunshine Act, 33037, 33038

Pension and Welfare Benefits Administration
NOTICES
Plan administrators; failure to file timely Form 5500 annual reports; civil penalties; top hat plan and pre-grace period late filers; guidance, 33019

Postal Service
RULES
Domestic Mail Manual:
COD article loss, claim for loss waiting period extension, 32899

Presidential Documents
EXECUTIVE ORDERS
POW and MIA records declassification (EO 12812), 32879

Public Health Service
See Agency for Health Care Policy and Research
See Agency for Toxic Substances and Disease Registry
See Centers for Disease Control
See Food and Drug Administration
See National Institutes of Health
NOTICES
Agency information collection activities under OMB review, 32998
Organization, functions, and authority delegations:
Agency for Health Care Policy and Research, 32999

Reclamation Bureau
NOTICES
Agency information collection activities under OMB review, 33007

Resolution Trust Corporation
RULES
Freedom of Information Act; implementation, 32881
NOTICES
Coastal Barrier Improvement Act; property availability:
Horse Hollow Cave, KY, 33027
Lakewood Village, TX, 33027

Rural Electrification Administration
NOTICES
Obsolete electric program bulletins; rescission, 32967

Rural Telephone Bank
NOTICES
Meetings; Sunshine Act, 33037

Securities and Exchange Commission
NOTICES
Applications, hearings, determinations, etc.:
Barclays Bank PLC, 33028
Merrill Lynch Retirement/Income Fund, Inc., 33029
Public utility holding company filings, 33029

Small Business Administration
RULES
Small business size standards:
Size determination appeals; filing date correction, 32889
PROPOSED RULES
Small business size standards:
Nonmanufacturer rule; waivers—
Printing paper, 32926

Social Security Administration
PROPOSED RULES
Social security benefits and supplemental security income:
Vocational rehabilitation services payments, 32926
NOTICES
Agency information collection activities under OMB review, 33000

State Department
RULES
Litigation; service of process; production of official information and testimony of agency employees as witnesses, 32896

Surface Mining Reclamation and Enforcement Office
NOTICES
Agency information collection activities under OMB review, 33010

Toxic Substances and Disease Registry Agency
See Agency for Toxic Substances and Disease Registry

Transportation Department
See Coast Guard
See Federal Aviation Administration

See Federal Highway Administration
See National Highway Traffic Safety Administration
NOTICES
Aviation proceedings:
Agreements filed; weekly receipts, 33030
Certificates of public convenience and necessity and foreign air carrier permits; weekly applications, 33031

Treasury Department
NOTICES
Agency information collection activities under OMB review, 33032–33035

Wage and Hour Division
RULES
Alien crewmembers for longshore activities in U.S. ports; attestations by employers
Correction, 32894

Separate Parts In This Issue

Part II
Environmental Protection Agency, 33040

Part III
Department of Education, 33062

Part IV
Department of Education, 33068

Part V
Federal Emergency Management Agency, 33094

Part VI
Department of the Interior, Bureau of Indian Affairs, 33096

Reader Aids
Additional information, including a list of public laws, telephone numbers, and finding aids, appears in the Reader Aids section at the end of this issue.

CFR PARTS AFFECTED IN THIS ISSUE

A cumulative list of the parts affected this month can be found in the Reader Aids section at the end of this issue.

1 CFR
305 32881

3 CFR
Executive Orders:
12812 32879

5 CFR
1201 32881

12 CFR
1615 32881

13 CFR
121 32889
Proposed Rules:
121 32926

14 CFR
71 32890

18 CFR
152 32890

20 CFR
655 32894
Proposed Rules:
404 32926
416 32926

21 CFR
540 32895
Proposed Rules:
1308 32937

22 CFR
172 32896

29 CFR
506 32894
Proposed Rules:
42 32939

39 CFR
111 32899

40 CFR
122 33040
123 33040
130 33040
Proposed Rules:
123 33051

44 CFR
65 (2 documents) 32899, 32901
Proposed Rules:
67 32939

49 CFR
571 32902
1057 32905
Proposed Rules:
571 32942

50 CFR
285 32905
655 32923
663 32924
661 32924
675 32925
Proposed Rules:
611 32952
640 32956
685 32952

Federal Register
Vol. 57, No. 143
Friday, July 24, 1992

Presidential Documents

Title 3—

The President

Executive Order 12812 of July 22, 1992

Declassification and Release of Materials Pertaining to Prisoners of War and Missing in Action

WHEREAS, the Senate, by S. Res. 324 of July 2, 1992, has asked that I "expeditiously issue an Executive order requiring all executive branch departments and agencies to declassify and publicly release without compromising United States national security all documents, files, and other materials pertaining to POWs and MIAs;" and

WHEREAS, indiscriminate release of classified material could jeopardize continuing United States Government efforts to achieve the fullest possible accounting of Vietnam-era POWs and MIAs; and

WHEREAS, I have concluded that the public interest would be served by the declassification and public release of materials pertaining to Vietnam-era POWs and MIAs as provided below;

NOW, THEREFORE, by the authority vested in me as President by the Constitution and the laws of the United States of America, I hereby order as follows:

Section 1. All executive departments and agencies shall expeditiously review all documents, files, and other materials pertaining to American POWs and MIAs lost in Southeast Asia for the purposes of declassification in accordance with the standards and procedures of Executive Order No. 12356.

Sec. 2. All executive departments and agencies shall make publicly available documents, files, and other materials declassified pursuant to section 1, except for those the disclosure of which would constitute a clearly unwarranted invasion of personal privacy of returnees, family members of POWs and MIAs, or other persons, or would impair the deliberative processes of the executive branch.

Sec. 3. This order is not intended to create any right or benefit, substantive or procedural, enforceable by a party against the United States, its agencies or instrumentalities, its officers or employees, or any other person.

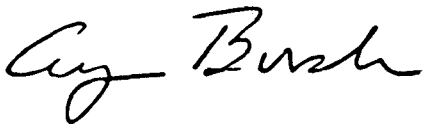

THE WHITE HOUSE,
July 22, 1992.

[FR Doc. 92-17708
Filed 7-22-92; 4:18 pm]
Billing code 3195-01-M

Rules and Regulations

Federal Register
Vol. 57, No. 143
Friday, July 24, 1992

This section of the FEDERAL REGISTER contains regulatory documents having general applicability and legal effect, most of which are keyed to and codified in the Code of Federal Regulations, which is published under 50 titles pursuant to 44 U.S.C. 1510.
The Code of Federal Regulations is sold by the Superintendent of Documents. Prices of new books are listed in the first FEDERAL REGISTER issue of each week.

ADMINISTRATIVE CONFERENCE OF THE UNITED STATES

1 CFR Part 305

Recommendations of the Administrative Conference Regarding Administrative Practice and Procedure; Correction

AGENCY: Administrative Conference of the United States.

ACTION: Recommendations; correction.

SUMMARY: The Administrative Conference of the United States is correcting an error in a recommendation regarding streamlining attorney's fee litigation adopted at its Forty-Fifth Plenary Session, previously published in the **Federal Register** on July 8, 1992 (57 FR 30101).

DATES: This correction is effective June 30, 1992.

FOR FURTHER INFORMATION CONTACT: Renee Barnow, Information Officer, or Jeffrey S. Lubbers, Research Director (202-254-7020).

SUPPLEMENTARY INFORMATION: This notice corrects an error in Administrative Conference Recommendation 92-5, Streamlining Attorney's Fee Litigation Under the Equal Access to Justice Act (1 CFR 305.92-5). The word "administrative" was omitted from footnote one to that recommendation, which should refer to "the resulting administrative order," rather than "the resulting order."

PART 305—RECOMMENDATIONS OF THE ADMINISTRATIVE CONFERENCE OF THE UNITED STATES

The following correction is made in Recommendation 92-5, Streamlining Attorney's Fee Litigation Under the Equal Access to Justice Act, published in the **Federal Register** on July 8, 1992 (57 FR 30101). Footnote 1 to paragraph 1(c) of the recommendation, which appears at the bottom of the third column of page 30109, is corrected to read as follows:

[1] "Final disposition" occurs when a party has prevailed in a proceeding and the disposition of the proceeding is final and unappealable; in proceedings involving a remand from a court to an agency, final disposition does not occur until the remanded proceeding is concluded and the resulting administrative order is final and unappealable.

Dated: July 16, 1992.

Jeffrey S. Lubbers,
Research Director.

[FR Doc. 92-17465 Filed 7-23-92; 8:45 am]

BILLING CODE 6110-01-M

MERIT SYSTEMS PROTECTION BOARD

5 CFR Part 1201

Practices and Procedures

AGENCY: Merit Systems Protection Board.

ACTION: Final rule.

SUMMARY: To reflect the move of the St. Louis Regional Office (SLRO), the Merit Systems Protection Board is amending its rules of practices and procedures by changing SLRO's address as listed in 5 CFR part 1201, appendix II.

EFFECTIVE DATE: August 8, 1992.

FOR FURTHER INFORMATION CONTACT: Thomas Lanphear, Director, Office of Regional Operations, (202) 653-7980.

SUPPLEMENTARY INFORMATION:

List of Subjects in 5 CFR 1201

Administrative practice and procedures, Civil rights, Government employees.

Accordingly, the Board amends 5 CFR part 1201 as follows:

1. The authority citation for part 1201 continues to read as follows:

Authority: 5 U.S.C. 1204 and 7701.

2. Appendix II to part 1201 is amended by revising the address in item number 8 to read as follows:

Appendix II to Part 1201—Appropriate Regions Office for Filing Appeals

* * * * *

8. St. Louis Regional Office, 911 Washington Avenue, Suite 410, St. Louis, Missouri 63101-1203 * * *

* * * * *

Shannon McCarthy,
Acting Clerk of the Board.

[FR Doc. 92-17419 Filed 7-23-92; 8:45 am]

BILLING CODE 4010-22-M

RESOLUTION TRUST CORPORATION

12 CFR Part 1615

RIN 3205-AA07

Disclosure of Information

AGENCY: Resolution Trust Corporation.

ACTION: Interim rule with request for comments.

SUMMARY: The Resolution Trust Corporation (RTC) is adopting an interim rule for the processing of requests for access to RTC records, other than the records of the RTC Inspector General, pursuant to the Freedom of Information Act (FOIA). Since its creation, the RTC has conducted its FOIA program under the auspices of the Federal Deposit Insurance Corporation (FDIC) disclosure regulations. Because the organizational and operational structure of the RTC has come to differ so greatly from that of the FDIC, this interim rule is necessary to assist the public with respect to requests for disclosure of RTC records.

DATES: This interim rule is effective July 24, 1992, except for §§ 1615.2(c) and 1615.9 which are effective October 22, 1992. Comments must be received by September 22, 1992.

ADDRESSES: Comments must be sent to: John M. Buckley, Jr., Secretary, Resolution Trust Corporation, 801 17th Street, NW., Washington, DC 20434-0001. Comments may be hand delivered to room 321 on business days between 9 a.m. and 5 p.m. Comments may also be inspected in the Public Reading Room, 801 17th Street NW., between 9 a.m. and 5 p.m. on business days. Phone number 202-416-6940; FAX 202-416-4753.

FOR FURTHER INFORMATION CONTACT: Philip Lindermuth, Acting Chief, FOIA/PA Branch, Office of the Secretary, or call (703) 908-6132. (This is not a toll-free number.)

SUPPLEMENTARY INFORMATION:

Discussion of Interim Rule

A. Scope

This rule governs release of all Corporate records, with the exception of those records created by the RTC Office of the Inspector General, pursuant to the FOIA, as amended, and by the RTC public reference facilities. This rule sets forth the procedures to be used by members of the public in requesting records from the RTC, the procedures to be used when appealing a decision to deny access to records, in whole or in part, and the fee schedule applicable to responding to requests for access to records either pursuant to the FOIA or from the RTC public reference facilities.

B. Requests for Information

The rule provides that all written requests for records pursuant to the FOIA, with the exception of records created by the RTC Office of Inspector General, should be sent to the Office of the Secretary in Washington, DC. Requests for such records must reasonably describe the records sought. The rule also provides general guidance pertaining to records made available for public inspection and copying by the RTC public reference facilities.

C. Initial and Final Decisions

The rule delegates to the Secretary of the RTC, or designee, authority to make determinations concerning requests for access to records pursuant to the FOIA. Final decisions on an appeal of an initial denial of access to records will be made by the General Counsel of the RTC or designee.

The rule also explains that it is the position of the RTC that in its receivership and conservatorship capacities, the RTC is not an agency for purposes of the FOIA. However, if a requested record is held by the RTC in its non-agency capacity, access to such record under the FOIA shall first be subject to a determination of whether such record is an agency record of the RTC in its corporate capacity. Moreover, such determination shall not preclude the RTC from disclosing certain non-agency records in response to a request as a matter of public policy.

D. Fees and Fee Waivers

The rule provides that agency records will be provided in response to FOIA requests at no charge if the total fee is $25.00 or less. The duplication charge for records requested either pursuant to the FOIA or from RTC public reference facilities is $.20 per page. The rule also provides for reasonable search and review fees applicable to certain types of requesters. It further provides that fees applicable to FOIA requests may be waived if disclosure of the information is in the public interest because it is likely to contribute significantly to public understanding of the operations and activities of the government and is not primarily in the commercial interest of the requester. The rule provides extensive guidance pertaining to how the RTC will evaluate requests for waivers of fees.

Request for Public Comment

The RTC is seeking comments on all aspects of this interim rule. Comments will be carefully reviewed for the purpose of developing final regulations.

Administrative Procedure Act

The RTC is adopting this regulation as an interim final rule effective upon publication in the **Federal Register** without the notice and comment period or delayed effective date as provided for in the Administrative Procedure Act, 5 U.S.C. 553. These requirements may be waived for "good cause."

The RTC was created in August 1989 by the Financial Institutions Reform, Recovery, and Enforcement Act of 1989, (12 U.S.C. 1441a.) Since that time, the RTC has used regulations promulgated by the Federal Deposit Insurance Corporation to process requests it receives pursuant to the FOIA. With the passage of time and establishment of separate RTC offices and files, there is a need for the RTC to have its own regulations implementing the FOIA.

The substance of much of the rule is largely mandated by the FOIA, and the rule is substantially similar to other agencies' FOIA regulations which have already been subject to public comment. In the case of those portions of the rule the need for public comment is reduced since the RTC has little discretion in adopting those provisions.

Therefore, the benefits to the public in adopting the interim regulations outweigh any harm from the delay in seeking public comment.

Regulatory Flexibility Act

The undersigned hereby certifies that the interim regulations, and any final regulations that may be adopted following comment on the interim regulations, are not expected to have a significant economic impact on a substantial number of small entities within the meaning of the Regulatory Flexibility Act (5 U.S.C. 601, *et seq.*)

List of Subjects in 12 CFR Part 1615

Confidential business information, Freedom of information.

For the reasons set forth in the preamble, the Resolution Trust Corporation adds part 1615 to title 12, Chapter XVI, of the Code of Federal Regulations to read as follows:

PART 1615—DISCLOSURE OF INFORMATION

Sec.

1615.1 General provisions.
1615.2 RTC public reference facilities.
1615.3 Requirements pertaining to requests.
1615.4 Responses to requests.
1615.5 Form and content of responses.
1615.6 Confidential commercial information.
1615.7 Appeals.
1615.8 Preservation of records.
1615.9 Fees.
1615.10 Other rights and services.

Appendix A to part 1615—Public Information Centers Address List

Authority: 5 U.S.C. 552; 12 U.S.C. 1441a; 31 U.S.C. 483a.

§ 1615.1 General provisions.

(a) *In general.* This part contains the regulations of the Resolution Trust Corporation (RTC), with the exception of the Office of the Inspector General of the RTC, implementing the Freedom of Information Act (FOIA), as amended, 5 U.S.C. 552. Information authorized for customary disclosure to the public by RTC staff in the regular course of the performance of official duties, including information made available by the RTC public reference facilities described in § 1615.2, may be sought directly from those sources rather than by a request pursuant to the FOIA under this part.

(b) *Access to records of the RTC Office of the Inspector General.* Regulations governing the disclosure of information by the Office of the Inspector General of the RTC are published in part 1680 of this chapter.

(c) *Definitions*—(1) *Agency* has the meaning given in 5 U.S.C. 551(1), 5 U.S.C. 552(e) and 12 U.S.C. 1441a(b)(1)(B).

(2) *Agency record* means a record created or obtained by the RTC and under the RTC's control at the time a request is received.

(3) *Appeal* means the letter by a requester seeking review of an adverse determination of his/her request, as described in 5 U.S.C. 552(a)(6)(A)(ii).

(4) *Clerical personnel* means RTC personnel at grade level 9 or below.

(5) *Commercial use* is a request from, or on behalf of, one who seeks information for a use or purpose that furthers the commercial, trade or profit interests of the requester or person or entity on whose behalf the request is made, which can include furthering those interests through litigation.

(6) *Confidential Commercial Information* means records provided to

the government by a submitter that arguably contain material exempt from release under Exemption 4 of the FOIA, 5 U.S.C 552(b)(4), because disclosure could reasonably be expected to cause substantial competitive harm to the submitter.

(7) *Depository institution* means a thrift savings institution as described in 12 U.S.C. 1441a(b)(3)(A).

(8) *Direct costs* means those expenditures which the RTC actually incurs in searching for and duplicating (and, in the case of commercial use requesters, reviewing) records to respond to a FOIA request. Direct costs include, for example the salary of the employee performing the work (the basic rate of pay for the employee plus 16 percent of that rate to cover benefits) and the cost of operating duplicating machinery. Not included in direct costs are overhead expenses such as costs of space and heating or lighting of the facility in which the records are stored.

(9) *Duplication* refers to the process of making a copy of a record necessary to respond to a FOIA request. Such copies can take the form of paper copy, microfilm, audio-visual material, or machine-readable information (e.g., magnetic tape or disk), among others.

(10) *Educational institution* refers to a preschool, a public or private elementary or secondary school, an institution of undergraduate higher education, an institution of graduate higher education, an institution of professional education and an institution of vocational education, which operates a program or programs of scholarly research and requests records in furtherance of scholarly research.

(11) *Noncommercial scientific institution* refers to an institution that is not operated on a "commercial"basis as that term is referenced in paragraph (c)(5) of this section, and which is operated, and requests records, solely for the purpose of conducting scientific research the results of which are not intended to promote any particular product or industry.

(12) *Offeror* means any person or entity that submits a contract proposal to the RTC in response to a solicitation of services.

(13) *Professional personnel* means RTC personnel at grade levels 10 through and including 14.

(14) *Record* includes records, files, documents, reports, correspondence, books, and accounts, or any portion thereof, whether maintained in paper, electronic or other format.

(15) *Representative of the news media* means any person actively gathering news for an entity that is organized and operated to publish or broadcast news to the public. The term "news" means information that is about current events or that would be of current interest to the public. Examples of news media entities include television or radio stations broadcasting to the public at large, and publishers of periodicals (but only in those instances where they can qualify as disseminators of "news") who make their products available for purchase or subscription by the general public. In this regard, a request for records supporting the news dissemination function of the requester shall not be considered to be for a commercial use. A freelance journalist who demonstrates a solid basis for expecting publication by a news organization and requests records solely for that purpose will be considered a representative of the news media.

(16) *Request* means any FOIA request for records made pursuant to 5 U.S.C. 552(a)(3).

(17) *Requester* means any person who submits a request to the RTC.

(18) *Review* refers to the process of examining a record located in response to a request to determine whether any portion of it is permitted to be withheld. It also includes processing any record for disclosure, i.e., doing all that is necessary to excise it and otherwise prepare it for release, including compliance with the pre-disclosure notification procedures outlined in § 1615.6. Review time does not include time spent resolving general legal or policy issues regarding the application of exemptions.

(19) *Search* includes all time spent looking for material that is responsive to a request, including page-by-page or line-by-line identification of material within documents.

(20) *Senior professional personnel* means RTC personnel at grade level 15 or above.

(21) *Solicitation of Services* means a written request for proposals distributed to an offeror by the RTC.

(22) *Submitter* means any person or entity that provides confidential commercial information, directly or indirectly, to the RTC. The term submitter includes, but is not limited to, corporations, state governments and foreign governments.

(d) *Responsibilities.* The Secretary of the RTC shall be responsible for all matters pertaining to the administration of this part with the RTC. The Secretary may take or direct such actions through the Freedom of Information Act/Privacy Act (FOIA/PA) Branch of the Office of the Secretary and the field Vice Presidents of their designees as he/she deems necessary to carry out this responsibility.

(e) *Compliance with administrative time limits.* The RTC shall comply with the time limits set forth in the FOIA for responding to and processing requests and appeals, unless there are exceptional circumstances within the meaning of 5 U.S.C. 552(a)(6)(C). The RTC shall notify a requester whenever it is unable to respond to or process the request or appeal within the time limits established by the FOIA. The RTC shall respond to and process requests and appeals in their approximate order of receipt, to the extent consistent with sound administrative practice.

§ 1615.2 RTC public reference facilities.

(a) *In general.* To disseminate certain documents, the RTC has a specially staffed and equipped public reading room located in Washington, D.C., and public reference facilities in the Public Service Centers in four field offices. Any member of the public may seek copies of documents maintained at the public reference facilities either by telephone or in person. The addresses and telephone numbers of the Public Reading Room in Washington, DC, and Public Service Center are listed in appendix A of this part. Each Public Service Centers maintains certain documents on general agency matters and documents pertaining only to activities by that particular geographic region. The Public Reading Room in Washington has available for inspection all of the publicly available documents and information available from each of the four Public Service Centers. The Public Reading Room will send any documents from its document collection to RTC's Public Service Centers for inspection in the public reference facilities at those offices as desired by a member of the public. Fees for services provided by these public reference facilities are set out in paragraph (c) of this section.

(b) *Index of public reference facility information.* Each public reference facility shall maintain and make available for public inspection and copying, and publish monthly or more frequently, a current index of the materials there available, including such materials which are required to be indexed under 5 U.S.C. 552(a)(2).

(c) *Public reference facility fees.* Pursuant to § 1615.9(i)(1), fees for services at each public reference facility are as follows:

(1) *Inspection.* Members of the public are not charged for their inspection of documents which are maintained at a public reference facility.

(2) *Duplication.* For a paper photocopy of a document, the fee shall be $0.20 per page. For copies produced by computer, such as printouts or diskettes, the actual direct costs shall be charged, including operator time. For other methods of duplication, the actual direct costs of duplicating the document shall be charged.

(3) *Research.* (i) Research fees may be assessed for time spent by public reference facility personnel determining the existence of, and/or locating, documents or information sought by members of the public if the existence of such records or information is not readily ascertainable by reference to the index required by paragraph (b) of this section. Such activity includes, but is not limited to, searches of databases by public reference facility personnel.

(ii) Fees for research conducted by public reference facility personnel will be assessed at the rates stated in § 1615.9(b)(1) (ii) and (iii).

(4) *Payment.* Requesters for information under this section shall pay fees by cash, check or money order made payable to the "Resolution Trust Corporation."

§ 1615.3 Requirements pertaining to requests.

(a) *In general.* Any person seeking copies of agency records that are not already available among the document collections of the RTC public reference facilities described in § 1615.2, or that are not included among documents authorized for customary disclosure by RTC staff to the public in the regular course of the performance of their duties, may request such records by submitting a FOIA request in accordance with this part.

(b) *How made and addressed.* A requester may make a request under this part for any agency record of the RTC by writing to the Resolution Trust Corporation, Office of the Secretary, FOIA/PA Branch, International Place, 1735 North Lynn Street, Rosslyn, Virginia 22209. Both the envelope and the request itself should be clearly marked: "Freedom of Information Act Request." A request will not be deemed to have been received by the RTC and the administrative time limits of the FOIA will not begin to run until such request, made in accordance with the requirements of this section, is received by the Office of the Secretary. To facilitate the RTC's response to requests in accordance with § 1615.4, to the extent practicable separate requests should be made for records located in separate field locations.

(c) *Request must reasonably describe the records sought.* (1) A request must describe the records sought in sufficient detail to enable RTC personnel to locate the records with a reasonable amount of effort. A request for a specific category of records shall be regarded as fulfilling this requirement if it enables responsive records to be identified by a technique or process that is not unreasonably burdensome or disruptive of RTC operations. Whenever possible, a request should include specific information about each record sought, such as the date, title or name, author, recipient and subject matter of the record. If the request relates to a pending litigation matter, the request should indicate the title of the case, the court in which the case was filed and the nature of the case. If the records are known or believed to be in a particular headquarters, field location or operational division, the request should identify such office or operational division. Organization charts and functions of each RTC operational division can be obtained from any of the public reference facilities listed at appendix A of this part.

(2) If it is determined that a request does not reasonably describe the records sought, the requester shall be advised what additional information is needed or why the request is otherwise insufficient. The requester also shall be extended the opportunity to confer with RTC personnel with the objective of reformulating the request in a manner which will meet the requirements of this section.

(3) Personnel of the FOIA/PA Branch, and field FOIA Specialists where a request covers only records of one field location as noted in § 1615.4(b)(2), are available to confer with requesters in all instances in order to assist them in conforming their requests to the requirements of this section. A telephone number for the appropriate FOIA Specialist is provided in the acknowledgment letter sent to a requester upon receipt of the request by the FOIA/PA Branch.

(d) *Fee requirements.* A request must also conform to the requirements pertaining to fees as stated in § 1615.9.

§ 1615.4 Responses to requests.

(a) *Authority to grant or deny requests.* The Secretary of the RTC, or designee, is authorized to grant or deny any request for a record of the RTC, excluding records of the Office of Inspector General which are governed by Part 1680 of this chapter.

(b) *RTC procedures.* (1) Initial requests for records will be forwarded by the FOIA/PA Branch to the head of the RTC division or office which is believed to have custody of such records.

(2) Except as otherwise provided in this section, where it is determined that all responsive agency records are located within the area of responsibility of a single RTC Field Office, the response to the request will be provided by the Office Vice President, or designee.

(3) Except as otherwise provided in this section, the headquarters FOIA/PA Branch shall ordinarily be responsible for responding to all other requests.

(c) *Records of another agency*—(1) *In general.* When it is determined that a requested record originated at or was created by another Federal agency or department, the RTC will either:

(i) Respond to the request, after consulting with the other agency or department; or

(ii) Refer the responsibility for responding to the request to the other agency or department, but only if that other agency or department is subject to the provisions of the FOIA. Ordinarily, the agency or department that originated a requested record or information contained in a responsive record shall be presumed to be the agency or department best able to determine whether or not to disclose the information in response to the request. However, nothing in this section shall prohibit an agency or department that originated a requested record, or the RTC, from referring the responsibility for responding to the request to any other agency or department, if the RTC or the agency or department that originated the requested record determines that the other agency or department has a greater interest in the requested record or the information contained therein.

(2) *Notice of referral.* Whenever the RTC refers all or any part of the responsibility for responding to a request to another agency or department, it ordinarily will inform the requester of the referral and inform the requester of the name and address of each agency or department to which the request has been referred and the portions of the request so referred.

(3) *Agreements regarding consultations and referrals.* No provision of this section shall preclude formal or informal agreements between the RTC and another agency or department to eliminate the need for consultations or referrals of requests or classes of requests.

(d) *Exemptions.* The RTC may deny access to requested records or reasonably segregable portions thereof when they contain information which

falls into one or more of the following categories:

(1) Matters which are:

(i) Specifically authorized under criteria established by an Executive Order to be kept secret in the interest of national defense or foreign policy; and

(ii) In fact properly classified pursuant to such Executive Order;

(2) Matters related solely to the personnel rules and practices of the RTC;

(3) Matters specifically exempted from disclosure by statute (other than the Privacy Act of 1974, 5 U.S.C. 552a), provided that such statute:

(i) Requires that the matters be withheld from the public in such a manner as to leave no discretion on the issue; or

(ii) Establishes particular criteria for withholding or refers to particular types of matters to be withheld;

(4) Trade secrets and commercial or financial information obtained from a person and privileged or confidential;

(5) Interagency or intra-agency memoranda or letters which would not be available by law to a party other than an agency in litigation with the RTC;

(6) Personnel and medical files and similar files the disclosure of which would constitute a clearly unwarranted invasion of personal privacy;

(7) Records or information compiled for law enforcement purposes, but only to the extent that the production of such law enforcement records or information:

(i) Could reasonably be expected to interfere with enforcement proceedings;

(ii) Would deprive a person of a right to a fair trial or an impartial adjudication;

(iii) Could reasonably be expected to constitute an unwarranted invasion of personal privacy;

(iv) Could reasonably be expected to disclose the identity of a confidential source, including a state, local or foreign agency or authority or any private institution which furnished information on a confidential basis, and, in the case of a record or information compiled by a criminal law enforcement authority in the course of a criminal investigation or by an agency conducting a lawful national security intelligence investigation, information furnished by a confidential source;

(v) Would disclose techniques and procedures for law enforcement investigations or prosecutions, or would disclose guidelines for law enforcement investigations or prosecutions if such disclosure could reasonably be expected to risk circumvention of the law; or

(vi) Could reasonably be expected to endanger the life or physical safety of an individual;

(8) Matters contained in or related to examination, operating or condition reports by or on behalf of, or for the use of an agency responsible for the regulation or supervision of financial institutions;

(9) Geological and geophysical information and data, including maps, concerning wells.

(e) *Exclusion.* The RTC may treat requested records as not subject to FOIA requirements whenever a request involves access to records described in paragraph (d)(7) of this section and—

(1) The investigation or proceeding involves a possible violation of criminal law; and

(2) There is reason to believe that:

(i) The subject of the investigation or proceeding is not aware of it pendency; and

(ii) Disclosure of the existence of the records could reasonably be expected to interfere with enforcement proceedings.

(f) *Records of receiver or conservator.* The RTC is not an agency for purposes of the FOIA when acting in its capacity as receiver or conservator. Records of the receivership or conservatorship may have been, under certain circumstances, incorporated into RTC corporate files. If a requested record is held by the RTC in its non-agency capacity, access to the record under the FOIA is therefore subject to a determination as to whether it has been incorporated into the records of the RTC in its corporate capacity. Such a determination shall not preclude the RTC from disclosing certain non-agency records in response to a request as a matter of public policy.

(g) *Date for determining responsive records.* In determining records responsive to a request, the RTC ordinarily will include only those records within the RTC's possession and control as of the date of its receipt of the request.

§ 1615.5 Form and content of responses.

(a) *Form and content of notice granting request.* After a determination to grant a request in whole or in part, the requester shall be so notified in writing. The notice shall describe the manner in which the requested records will be disclosed, whether by providing a copy of each record to the requester, including copies available at an RTC public reference facility, or, at the RTC's discretion, by making a copy of each record available to the requester for inspection at a reasonable time and place. The information provided shall be in a form specified by the RTC that is reasonably useable by the requester. The requester shall also be informed in the notice of any fees to be charged in accordance with the provisions of § 1615.9.

(b) *Form of notice denying a request.* A requester shall be informed in writing if a requested record is denied in whole or in part. The notice will be signed by the Secretary, or designee, and will include:

(1) The name and title or position of the person responsible for the denial;

(2) A brief statement of the reason or reasons for the denial, including the FOIA exemption or exemptions which were relied upon in denying the requested records in whole or in part and a brief explanation of the manner in which the exemption or exemptions apply to each record denied; and

(3) A statement that the denial may be appealed under § 1615.7 and a description of the requirement of § 1615.7.

(c) *Nonexistent records.* (1) The FOIA neither requires the compilation or creation of a record for the purposes of responding to a request for records nor does it require agencies to fulfill requests for records not yet in existence, even where such record may be expected to come into existence at a later time.

(2) If a requested record is known to have been destroyed or otherwise disposed of, or if no such record is known to exist or can be located after a reasonable search, the requester will be so notified in writing.

§ 1615.6 Confidential commercial information.

(a) *In general.* Confidential commercial information submitted to the RTC shall not be reviewed for disclosure pursuant to a request except in accordance with this section.

(b) *Notice to submitters.* Whenever the RTC receives a request for confidential commercial information and, pursuant to paragraph (c) of this section, the submitter is entitled to receive notice of that request, the RTC shall promptly notify the submitter that it has received the request, unless such notice is excused under paragraph (h) of this section. Such written notice shall either describe the exact nature of the confidential commercial information requested or provide copies of the records or portions thereof containing the confidential commercial information and be sent to the submitter by first class mail (or, in the discretion of the RTC, by certified or registered mail or other means reasonably calculated to ensure actual notice to the submitter). Where notice is required to be given to a

voluminous number of submitters, in lieu of mailing, the notice may be posted or published in a manner reasonably calculated to provide notice to the submitters. Whenever the RTC tenders notice to a submitter, it also shall notify the requester that the submitter has been provided with notice and an opportunity to object to the disclosure of all or any portion of the requested information.

(c) *When notice of receipt of request is required.* To the extent permitted by law, notice of receipt of a request shall be given to a submitter whenever:

(1) The submitter has designated the information as confidential commercial information pursuant to the requirements of this section; or

(2) The RTC has reason to believe that the disclosure of the information could reasonably be expected to cause substantial competitive harm to the submitter.

(d) *Designation of confidential commercial information—(1) In general.* Submitters of any confidential commercial information shall use good-faith efforts to designate either at the time of submission, by appropriate markings on their submissions, those portions of their submissions which they deem to contain confidential commercial information or, within a reasonable time after submission, provide to the initial submission recipient or current holder written notice clearly identifying the submission and subject confidential commercial information. Such designations shall be deemed to have expired upon the statutory expiration of the RTC or five years after the date of the submission unless the submitter requests, and provides reasonable justification for, a designation period of greater duration.

(2) *Compliance with solicitation of services and other guidance.* A solicitation of services distributed by the RTC to potential offerors may specify the kinds of information which may, may not, and must be designated as confidential commercial information in any contract proposal submitted to the RTC in response to the solicitation of services. Contract proposals submitted to the RTC in response to such solicitations of services must designate confidential commercial information in accordance with the solicitation of services and other applicable guidance. The RTC may be excused from the notice requirements of this section in the case of designations not made in accordance with the solicitation of services and other applicable guidance.

(e) *Opportunity to object to disclosure.* To the extent permitted by law, the RTC shall afford a submitter or its designee a reasonable period of time within which to provide the RTC with a detailed written statement of its objection to any portion of the disclosure of the information it submitted to the RTC and the grounds upon which such disclosure is opposed. Such statement shall specify all grounds for withholding any of the information and demonstrate why the submitter believes that the requested information is confidential commercial information. The submitter's claim of confidentiality should be supported by a statement by the submitter or the submitter's designee that the confidential commercial information has not previously been disclosed to the public. Information provided by a submitter pursuant to this paragraph may itself be subject to disclosure under the FOIA.

(f) *Notice of intent to disclose.* The RTC shall consider carefully a submitter's objections and specific grounds for nondisclosure prior to determining whether to disclose confidential commercial information. Whenever the RTC decides to disclose confidential commercial information over the objection of a submitter, a written notice shall be forwarded to the submitter which shall include: A statement of the reason(s) for which the submitter's disclosure objections were not sustained; a description of the confidential commercial information to be disclosed; and a specified disclosure date. To the extent permitted by law, such notice of intent to disclose shall be forwarded to the submitter within a reasonable number of days prior to the specified disclosure date. Whenever the RTC provides notice to the submitter of a final decision made with respect to any objection to disclosure, it also shall notify the requester.

(g) *Notice of FOIA lawsuit.* Whenever a requester brings a lawsuit seeking to compel disclosure of confidential commercial information, the RTC shall promptly notify the submitter.

(h) *Exceptions to the notice requirement.* The notice requirements of paragraph (b) of this section shall not apply if:

(1) The RTC determines that the information should not be disclosed;

(2) The information lawfully has been published or has officially been made available to the public;

(3) Disclosure of the information is required by law (other than 5 U.S.C. 552);

(4) Disclosure of the information is required by an RTC rule that:

(i) Was adopted pursuant to notice and public comment;

(ii) Specifies narrow classes of records submitted to the RTC that are to be released under the FOIA; and

(iii) Provides in exceptional circumstances for notice when the submitter provides written justification, at the time the information is submitted or a reasonable time thereafter, that disclosure of the information could reasonably be expected to cause substantial competitive harm;

(5) The information requested was not designated by the submitter as exempt from disclosure in accordance with paragraph (d) of this section when the submitter had an opportunity to do so at the time of the submission of the information or a reasonable time thereafter, unless the RTC has substantial reason to believe that the disclosure of the information would cause competitive harm; or

(6) The designation made by the submitter in accordance with paragraph (d) of this section appears obviously frivolous; except that, in such case, the submitter shall be provided with written notice of any final administrative decision to disclose confidential commercial information within a reasonable number of days prior to a specified disclosure date.

§ 1615.7 Appeals.

(a) *Appeals to the RTC General Counsel.* When a request for access to records or for a waiver of fees has been denied in whole or in part or when the RTC asserts that records do not exist or could not be located or when the RTC fails to respond to a request within the time limits set forth in the FOIA, the requester may appeal to the RTC General Counsel within 30 days of receipt of RTC's response to the request or lack thereof. An appeal to the RTC General Counsel shall be made in writing and addressed to the Office of the Secretary, FOIA/PA Branch, International Place, 1735 North Lynn Street, Rosslyn, Virginia 22209. Both the envelope and the letter of appeal itself must be clearly marked: "Freedom of Information Act Appeal." To expedite the appellate process, the appeal should be accompanied by copies of the original request and the initial denial. The appeal should contain a brief statement of the reasons why the requester believes the initial denial is in error. Appeals will be forwarded by the Secretary to the RTC General Counsel for action. An appeal not properly addressed and marked in accordance with this section will be forwarded to the RTC General Counsel as soon as it is identified. An appeal that is improperly addressed will be deemed to not have

been received by the RTC until the FOIA/PA Branch receives the appeal, or would have done so with the exercise of reasonable diligence by RTC personnel.

(b) *Action on appeals by the RTC General Counsel or designee.* The RTC General Counsel, or designee, shall notify the appellant within 20 working days after receipt of the appeal meeting the requirements of § 1615.7(a).

(c) *Extension of time.* Under certain circumstances, the RTC may require additional time, to the extent reasonably necessary, to properly process the appeal. The circumstances would arise in cases where the RTC has determined it necessary for a review or additional review of records which are in facilities, such as field offices or storage centers, that are not part of the RTC's Washington office, or which are voluminous and are not in close proximity to one another; or there is a need to consult with another agency or among two or three components of the RTC having a substantial interest in the determination. The RTC will promptly give written notification to the appellant of the estimated date it will make its determination and the reasons why additional time is required.

(d) *Form of action on appeal.* The disposition of an appeal shall be in writing. A decision affirming in whole or in part the denial of a request shall include a brief statement of the reason or reasons for the affirmance, including the FOIA exemption or exemptions relied upon and the relation to each record withheld, and a statement that judicial review of the denial is available in the U.S. District Court for the judicial district in which the requester resides or has a principal place of business, the judicial district in which the requested records are located, or in the U.S. District Court for the District of Columbia. If the denial of the request is reversed on appeal, the requester shall be so notified and the request shall be processed promptly in accordance with the decision on appeal.

§ 1615.8 Preservation of records.

The RTC shall preserve all correspondence relating to the requests it receives under this part, and all records processed pursuant to such requests, until such time as the destruction of such correspondence and records is authorized by the General Records Schedules issued by National Archives and Records Administration. Records known to be the subject of a pending request, appeal or lawsuit under the FOIA shall not be intentionally destroyed.

§ 1615.9 Fees.

(a) *In general.* The RTC will assess fees for search, duplication and review pursuant to 5 U.S.C. 552 according to the schedule contained in paragraph (b) of this section for services rendered in responding to and processing requests for records under this part. All fees so assessed shall be charged to the requester, except where the charging of fees is limited under paragraph (c) of this section or where a waiver or reduction of fees is granted under paragraph (d) of this section. Requesters shall pay fees by check or money order made payable to the "Resolution Trust Corporation."

(b) *Charges.* Subject to the limitations on charging fees pursuant to paragraph (c) of this section, and unless a waiver or reduction of fees has been granted pursuant to paragraph (d) of this section, RTC will assess the fees applicable to the request under one of the four request categories: commercial use; educational and noncommercial scientific institutions; representatives of the news media; and all other requests. The definitions in § 1615.1(c) (5), (10), (11), and (15) will be considered in determining which fee category is appropriate for assessing fees.

(1) *Search.* (i) No search fee shall be assessed with respect to requests by educational institutions, noncommercial scientific institutions, and representatives of the news media (as defined in § 1615.1 (c)(10), (11), and (15), respectively). Search fees shall be assessed in quarter-hour increments with respect to all other requests, subject to the limitations of paragraph (c) of this section. Search fees may be assessed for time spent searching even if responsive records cannot be located or where records located are subsequently determined to be entirely exempt from disclosure. The RTC shall insure, however, that searches are undertaken in the most efficient and least expensive manner reasonably possible; thus, for example, the RTC shall not engage in a line-by-line search where merely duplicating an entire document would be quicker and less expensive.

(ii) For each hour spent by clerical personnel in searching for and retrieving a requested record, the fee shall be at the rate of $12.50 per hour. Where a search cannot be performed entirely by clerical personnel (for example where the identification of records within the scope of a request requires the use of professional personnel) the fee shall be at the rate of $30.00 per hour of search time spent by such professional personnel. Where the time of senior professional personnel is required, the fee shall be at the rate of $40.00 per hour spent by such personnel.

(iii) For computer searches of records, which may be undertaken through the use of existing programming, requesters shall be charged the actual direct costs of conducting the search. These direct costs shall include the cost of operating a central processing unit for that portion of operating time that is directly attributable to searching for records responsive to a request, as well as the costs of operator/programmer salary apportionable to the search. The RTC is not required to alter or develop programming to conduct a search.

(iv) For searches that must be performed by a contractor rather than RTC staff, direct costs for the searches shall be assessed.

(2) *Duplication.* Duplication fees shall be assessed with respect to all requesters, subject to the limitations of paragraph (c) of this section. For a paper photocopy of a record (no more than one copy of which need be supplied), the fee shall be $0.20 per page. For copies produced by computer, such as tapes or printouts, the actual direct costs of producing the copy, including computer operator time, shall be charged. For other methods of duplication, actual direct costs of duplicating the record shall be charged.

(3) *Review.* (i) Review fees shall be assessed in quarter-hour increments with respect to only those requesters who seek records for a commercial use, as defined in § 1615.1(c)(5). For each hour spent by RTC professional personnel in reviewing a requested record for possible disclosure, the fee shall be at the rate of $30.00 per hour, except that where the time of senior professional personnel is required, the hourly fee shall be at the rate of $40.00 per hour. Review costs shall be recoverable even where there is ultimately no disclosure of a record.

(ii) Review fees shall be assessed only for the initial record review, i.e., all of the review undertaken when analyzing the applicability of a particular exemption to a particular record or record portion at the initial request level. No charge shall be assessed for review at the administrative appeal level of an exemption already applied. However, records or record portions withheld pursuant to an exemption that is subsequently determined not to apply may be reviewed again to determine the applicability of other exemptions not previously considered. The costs of such a subsequent review are properly assessable, particularly where that

review is made necessary by a change of circumstances.

(c) *Limitations on charging fees.* (1) No search or review fee shall be charged for a quarter-hour period unless more than half of that period is required for search or review.

(2) Except for requesters seeking records for a commercial use (as defined in § 1615.1 (c)(5)), there shall be no charge for:

(i) The first 100 pages of duplication (or its cost equivalent); and

(ii) The first two hours of search (or its cost equivalent).

(3) Whenever a total fee calculated under paragraph (b) of this section is $25.00 or less, no fee shall be charged.

(d) *Waiver or reduction of fees.* (1) Requests for a waiver or reduction of fees should be included in the initial request for records and must provide information that addresses each of the factors listed in paragraphs (d)(3) and (4) of this section. In providing information addressing each of the factors, the requester should include a full description of the intended use of the records; the specific activity, research, and analysis to be undertaken with the requested records; the manner in which the requested information will be disseminated and the nature and extent of the public to whom it will be disseminated; and any commercial interest the requester has in the requested records. Requests for a waiver or reduction of fees will be considered on a case-by-case basis.

(2) Records responsive to a request under 5 U.S.C. 552 shall be furnished without charge or at a charge reduced below that established under paragraph (b) of this section where the RTC determines, based upon information provided by a requester in support of a fee waiver request or otherwise made known to the RTC, that disclosure of the requested information is in the public interest because it is likely to contribute significantly to public understanding of the operations or activities of the government and is not primarily in the commercial interest of the requester.

(3) In order to determine whether the first fee waiver requirement (i.e., that disclosure of the requested information is in the public interest because it is likely to contribute significantly to public understanding of the operations or activities of the government) the following four factors shall be considered in sequence:

(i) The subject of the request: Whether the subject of the requested records concerns "the operations or activities of the government."

(ii) The informative value of the information to be disclosed: Whether the disclosure is "likely to contribute" to an understanding of government operations or activities.

(iii) The contribution to an understanding of the subject by the public likely to result from disclosure: Whether disclosure of the requested information will contribute to "public understanding."

(iv) The significance of the contribution to public understanding: Whether the disclosure is likely to contribute "significantly" to public understanding of government operations or activities.

(4) In order to determine whether the second fee waiver requirement (i.e., that disclosure of the requested information is not primarily in the commercial interest of the requester) the following two factors shall be considered in sequence:

(i) The existence and magnitude of a commercial interest: Whether the requester has a commercial interest that would be furthered by the requested disclosure.

(ii) The primary interest in disclosure: Whether the magnitude of the identified commercial interest of the requester is sufficiently large, in comparison with the public interest in disclosure, that disclosure is "primarily in the commercial interest of the requester."

(5) In determining whether wavier or reduction of fees is appropriate, the RTC shall also consider whether the requested records are already available to the public, or will add appreciably to the substance of information already available to the public, from RTC public reference facilities listed in Appendix A of this part, are documents authorized for customary disclosure by other RTC staff in the regular course of the performance of their duties, or are records available to the public from other sources as described in paragraph (i) of this section.

(6) Where only a portion of the requested records satisfies both of the requirements for a waiver or reduction of fees under this paragraph, a waiver or reduction shall be granted only as to that portion.

(e) *Notice of anticipated fees in excess of $25.00.* Where it is determined or estimated that the fees to be assessed under this section may amount equal to or more than $25.00 or an amount higher than any fee agreement stated in the request, the requester shall be notified as soon as practicable of the actual or estimated amount of the fees. (If only a portion of the fee can be estimated readily, the requester shall be advised that the estimated fee may be only a portion of the total fee.) In cases where a requester has been notified that actual or estimated fees may amount equal to or more than $25.00 or an amount higher than any fee agreement stated in the request, processing of the request will be held in abeyance until the requester has agreed in writing to pay the anticipated total fee. A notice to the requester pursuant to this paragraph shall offer him/her the opportunity to confer with RTC personnel to reformulate his/her request to meet his/her needs at a lower cost.

(f) *Aggregating requests.* Multiple requests by or on behalf of the same person for the same type of records or information may, in the discretion of the RTC, be aggregated for purposes of assessing search, duplication and review fees.

(g) *Advance payments.* (1) Where it is estimated that a total fee to be assessed under this section is likely to exceed $250.00, the requester may be required to make an advance payment of an amount up to the entire estimated fee, but not less than 20% of the estimated fees, before beginning to process the request, except, in the RTC's discretion, where the RTC receives a satisfactory assurance of full payment from a requester with a history of prompt payment.

(2) Where a requester has previously failed to pay a records access fee within 30 days of the date of billing, the requester may be required to pay the full amount owed, plus any applicable interest (as provided for in paragraph (h) of this section), and to make an advance payment of the full amount of any estimated fee before the RTC begins to process a new request or continues to process a pending request from that requester.

(3) For requests other than those described in paragraphs (g)(1) and (2) of this section, the RTC shall not require the requester to make an advance payment, i.e., a payment made before work is commenced or continued on a request. Payment owed for work already completed is not an advance payment.

(4) Where the RTC acts under paragraphs (g)(1) or (2) of this section, the administrative time limits prescribed in subsection (a)(6) of the FOIA, 5 U.S.C. 552(a)(6), for the processing of an initial request or an appeal, plus permissible extensions of these time limits, shall be deemed not to begin to run until the RTC has received a written agreement to pay estimated fees, payment of the estimated fees or payment of the assessed fee, whichever is applicable.

(h) *Charging interest.* The RTC may assess interest charges on an unpaid bill starting on the 31st day following the day on which the bill was sent to the

requester. Once a fee payment has been received by the RTC, even if not processed, the accrual of interest shall be stayed. Interest charges shall be assessed at the rate prescribed in 31 U.S.C. 3717 and shall accrue from the date of billing. The RTC shall follow the provisions of 31 U.S.C. 3716, 3718, and 3719 pertaining to the use of administrative offset, collection agencies, and consumer reporting agencies.

(i) *Other statutes specifically providing for fees.* (1) The fee schedule of this section does not apply with respect to the charging of fees under a statute specifically providing for setting the level of fees for particular types or records, (i.e., any statute that specifically requires a government entity such as the Government Printing Office or the National Technical Information Service, to set and collect fees for particular types of records) to:

(i) Serve both the general public and private sector organizations by conveniently making available government information;

(ii) Ensure that groups and individuals pay the cost of publications and other services that are for their special use so that these costs are not borne by the general taxpaying public;

(iii) Operate an information-dissemination activity on a self-sustaining basis to the maximum extent possible; or

(iv) Return revenue to the Treasury for defraying, wholly or in part, appropriated funds used to pay the cost of disseminating government information.

(2) Where records responsive to requests are maintained for distribution by agencies operating statutorily based fee schedule programs, the RTC shall inform requesters of the steps necessary to obtain records from those sources.

(j) *Charges for other services and materials.* Apart from the other provisions of this section, where the RTC elects, as a matter of administrative discretion, to comply with a request for a special service or materials, such as certifying that records are true copies or sending them by other than ordinary mail, the actual direct costs of providing the service or materials shall be charged.

§ 1615.10 Other rights and services.

Nothing in this part shall be construed to entitle any person, as of right, to any service or to the disclosure of any record to which the person is not entitled under 5 U.S.C. 552.

Appendix A to Part 1615—Public Information Centers Address List

The addresses of the Washington, D.C. Public Reading Room and field Public Service Centers are:

RTC Public Reading Room, 801 17th Street, NW., First Floor, Washington, DC (202-416-6940)

Public Service Center, 245 Peachtree Center Avenue, NE., Suite 1400, Atlanta, GA 30303, (404) 225-5069;

Public Service Center, 7400 W. 110th Street, Overland Park, KS 66210, (913) 344-8500;

Public Service Center, 3500 Maple Avenue, Dallas, TX 75219-3935, (214) 443-4860;

Public Service Center, 1225 17th Street, Suite 3085, Denver, CO 80202, (303) 291-5829.

By order of the Chief Executive Officer.

Dated at Washington, DC, this 8th day of July, 1992.

Resolution Trust Corporation.

John M. Buckley, Jr.,

Secretary.

[FR Doc. 92-16544 Filed 7-23-92; 8:45 am]

BILLING CODE 6714-01-M

SMALL BUSINESS ADMINISTRATION

13 CFR Part 121

Small Business Size Regulation; Date of Filing Size Determination Appeals

AGENCY: Small Business Administration.

ACTION: Final rule.

SUMMARY: On June 29, 1992, the Small Business Administration (SBA) published a final rule setting forth several amendments to its regulations governing procedure for service of process of appeals brought before SBA's Office of Hearings and Appeals (OHA) by Program Participants in or applicants to SBA's section 8(a) program (57 FR 28779). That rule erroneously stated that, with respect to appeals of size determinations, the date of filing of service is the date the pleading is received by OHA. SBA's size regulation has consistently stated that the date of filing in such cases is the date of postmark. This rule corrects the misstatement of the June 29, 1992 rule.

DATE: This rule shall be effective July 24, 1992.

FOR FURTHER INFORMATION CONTACT: David R. Kohler, Associate General Counsel for General Law, Office of the General Counsel, U.S. Small Business Administration, 409 Third Street, SW., Washington, DC 20416, (202) 205-6645.

SUPPLEMENTARY INFORMATION: On June 29, 1992, the Small Business Administration (SBA) published a final rule setting forth several amendments to its regulations governing procedure for service of process of appeals brought before SBA's Office of Hearings and Appeals (OHA) by Program Participants in or applicants to SBA's section 8(a) program. Among the regulations contained in the rule was an amendment to 13 CFR 121.1704 stating the address of OHA for purposes of filing an appeal. This amendment also incorrectly stated that, with respect to appeals of size determinations, the date of filing of the appeal is the date the pleading is received by OHA. This statement was inadvertently included in the amendent to § 121.1704 and is in direct conflict with 13 CFR 121.1702 which correctly states that the filing date of pleadings, for size determination appeal purposes, is determined by reference to the postmark date. This rule corrects this contradiction by removing the misstatement from 13 CFR 121.1704. To avoid confusion, SBA will consider the date of filing for all appeals of size determinations, including those filed while the June 29, 1992 rule was in effect, to be the date of postmark.

Due to the fact that this final rule governs matters of Agency organization, practice, and procedure and makes no substantive change to the current regulation, SBA is not required to determine if this rule constitutes a major rule for purposes of Executive Order 12291, to determine if it has a significant economic impact on a substantial number of small entities pursuant to the Regulatory Flexibility Act, 5 U.S.C. 601 *et seq.*, or to do a Federalism Assessment pursuant to Executive Order 12612. For purposes of the Paperwork Reduction Act, 44 U.S.C. ch. 35, SBA certifies that this rule will not impose any new reporting or recordkeeping requirements. Finally, for purposes of Executive Order 12778, SBA certifies that this rule is drafted, to the extent practicable, in accordance with the standards set forth in section 2 of that Order.

SBA is publishing this rule governing Agency organization, procedure, and practice without prior notice and opportunity for public comment pursuant to authority contained in the Administrative Procedure Act, 5 U.S.C. 553(b)(A).

List of Subjects in 13 CFR Part 121

Administrative practice and procedure, Government procurement, Grant programs—business, Loan programs—business, Small Business.

For the reasons set forth above, subpart A of part 121 of title 13, Code of Federal Regulations, is amended as follows:

PART 121—[AMENDED]

1. The authority citation for part 121 continues to read as follows:

Authority: 15 U.S.C. 632(a), 634(b)(6), 637(a), and 644(c).

§ 121.1704 [Amended]

2. Section 121.1704 is amended by removing the second sentence thereof.

Dated: July 20, 1992.

Patricia Saiki,

Administrator.

[FR Doc. 92-17502 Filed 7-23-92; 8:45 am]

BILLING CODE 8025-01-M

DEPARTMENT OF TRANSPORTATION

Federal Aviation Administration

14 CFR Part 71

[Airspace Docket No. 92-ANM-12]

Revocation of Transition Areas; Hanksville, UT

AGENCY: Federal Aviation Administration (FAA), DOT.

ACTION: Final rule.

SUMMARY: This action revokes the 700-foot and 1200-foot transition areas at Hanksville Airport, Hanksville, Utah. The transition areas were previously utilized to encompass an instrument approach procedure at Hanksville Airport. The approach procedure has since been canceled.

EFFECTIVE DATE: 0901 u.t.c. August 20, 1992.

FOR FURTHER INFORMATION CONTACT: James Riley, ANM-537, Federal Aviation Administration, Docket No. 92-ANM-12, 1601 Lind Avenue, SW., Renton, Washington 98055-4056, Telephone: (206) 227-2537.

SUPPLEMENTARY INFORMATION:

History

The Hanksville, Utah, 700-foot and 1200-foot transition areas were designed to encompass an instrument approach procedure at Hanksville Airport. The approach procedure has since been canceled. Therefore, I find that notice and public procedure under 5 U.S.C. 553(b) is unnecessary because this action is a minor amendment in which the public is not particularly interested.

Transition areas are published in § 71.181 of Handbook 7400.7 effective November 1, 1991, which is incorporated by reference in 14 CFR 71.1. The transition areas listed in this document will be removed subsequently from the handbook.

The Rule

This action amends part 71 of the Federal Aviation Regulations (14 CFR part 71) to revoke the Hanksville, Utah 700-foot and 1200-foot transition areas, which were designed to provide controlled airspace to encompass an instrument approach procedure at Hanksville Airport. The instrument approach procedure has been canceled.

The FAA has determined that this regulation only involves an established body of technical regulations for which frequent and routine amendments are necessary to keep them operationally current. Therefore, this regulation—(1) is not a "major rule" under Executive Order 12291; (2) is not a "significant rule" under DOT Regulatory Policies and Procedures (44 FR 11034; February 26, 1979); and (3) does not warrant preparation of a regulatory evaluation as the anticipated impact is so minimal. Since this is a routine matter that will only affect air traffic procedures and air navigation, it is certified that this rule will not have a significant economic impact on a substantial number of small entities under the criteria of the Regulatory Flexibility Act.

List of Subjects in 14 CFR Part 71

Aviation safety, Incorporation by reference, Transition area.

Adoption of the Amendment

In consideration of the foregoing, the Federal Aviation Administration amends 14 CFR part 71 as follows:

PART 71—[AMENDED]

1. The authority citation for 14 CFR part 71 continues to read as follows:

Authority: 49 U.S.C. app. 1348(a), 1354(a), 1510; E.O. 10854, 24 FR 9565, 3 CFR, 1959-1963 Comp., p. 389; 49 U.S.C. 106(g); 14 CFR 11.69.

§ 71.1 [Amended]

2. The incorporation by reference in 14 CFR 71.1 of the Federal Aviation Administration Order 7400.7, Compilation of Regulations, published April 30, 1991, and effective November 1, 1991, is amended as follows:

Section 71.181 Designation

* * * * *

ANM UT TA Hanksville, UT [Removed]

* * * * *

Issued in Seattle, Washington, on July 9, 1992.

Temple H. Johnson, Jr.,

Manager, Air Traffic Division.

[FR Doc. 92-17350 Filed 7-23-92; 8:45 am]

BILLING CODE 4910-13-M

DEPARTMENT OF ENERGY

Federal Energy Regulatory Commission

18 CFR Part 152

[Docket No. RM92-2-000 Order No. 543]

Regulations Governing Vehicular Natural Gas

July 16, 1992.

AGENCY: Federal Energy Regulatory Commission.

ACTION: Final rule.

SUMMARY: The final rule issues blanket sales certificates to all persons who engage in the sale for resale in interstate commerce of Vehicular Natural Gas (VNG). The blanket VNG sales certificates will be deemed issued automatically prior to engagement in VNG sales, thus obviating the need for filing applications requesting such authorization. The final rule also provides pre-granted abandonment authority. Finally, the final rule defines VNG as "natural gas that will be used, in either a gaseous or liquefied state, as fuel in any self-propelled vehicle."

EFFECTIVE DATE: August 24, 1992.

ADDRESSES: All requests for rehearing should refer to Docket No. RM92-2-000 and should be addressed to: Office of the Secretary, Federal Energy Regulatory Commission, 825 North Capitol Street, NE., Washington, DC 20426.

FOR FURTHER INFORMATION CONTACT: Jeffrey Gollomp, Office of the General Counsel, Federal Energy Regulatory Commission, 825 North Capitol Street, NE., Washington, DC 20426, (202) 208-1022.

SUPPLEMENTARY INFORMATION: In addition to publishing the full text of this document in the **Federal Register**, the Commission also provides all interested persons an opportunity to inspect or copy the contents of this document during normal business hours in room 3308, 941 North Capitol Street, NE., Washington, DC 20426.

The Commission's issuance Posting System (CIPS), an electronic bulletin board service, provides access to the texts of formal documents issued by the Commission. CIPS is available at no charge to the user and may be accessed using a person computer with a modem by dialing (202) 208-1397. To access CIPS, set your communications software to use 300, 1200, or 2400 baud, full duplex, no parity, 8 data bits, and 1 stop bit. The full text of this document will be available on CIPS for 30 dats from the

date of issuance. The complete text on diskette in WordPerfect format may also be purchased from the Commission's copy contractor, La Dorn Systems Corporation, located in Room 3106, 941 North Capitol Street, NE., Washington, DC 20426.

Before Commissioners: Martin L. Allday, Chairman; Charles A. Trabandt, Elizabeth Anne Moler, Jerry J. Langdon and Branko Terzic.

I. Introduction

The Federal Energy Regulatory Commission (Commission) is issuing a final rule governing the sale of Vehicular Natural Gas (VNG) for resale in interstate commerce. On March 12, 1992, the Commission issued a Notice of Proposed Rulemaking (NOPR) in this proceeding.[1] The NOPR was met with great support by those who commented on the proposed rule. Upon our further evaluation of the NOPR's provisions and the comments submitted thereto, we are adopting, in principal part, the provisions set forth in the NOPR. Certain commenters made suggestions that are reflected in the final rule and other issues are clarified as well.

The purpose of the VNG rule is to promote the availability of VNG to end users by simplifying the process by which any person may obtain certificate authority to engage in VNG sales that are subject to the Commission's jurisdiction under the Natural Gas Act (NGA). The rule also provides pre-granted abandonment authority for VNG sales for resale. By removing unnecessary regulatory impediments to the sale for resale of VNG, the Commission hopes to encourage its use as a fuel.

II. Background

In *Northern Illinois Gas Company*, 20 FERC ¶ 61,267 (1982), the Commission first addressed the issue of whether a Hinshaw pipeline's exemption from Commission jurisdiction under section 1(c) of the NGA would be lost were it to sell natural gas to customers who compressed such gas and used it as fuel in their motor vehicle fleets or resold it to others for similar use. This question arose because vehicles utilizing compressed natural gas (CNG) as fuel might leave the state, even though gas sold by a Hinshaw pipeline must, under section 1(c), be "ultimately consumed" in the state in which the Hinshaw pipeline receives the gas.[2] The Commission resolved this issue by finding that "the subject gas is 'ultimately consumed' within the meaning of Section 1(c) of the Natural Gas Act when the fuel is sold and delivered into the fuel tanks of the vehicles." [3] The Commission reached this finding even though some of the CNG fuel might actually be consumed outside the state of the Hinshaw pipeline.[4]

Shortly after the Commission's decision in *Northern Illinois*, Kansas-Nebraska Natural Gas Company filed a petition for a declaratory order that its sales of compressed natural gas (CNG) [5] were not subject to the Commission's jurisdiction under the NGA.[6] In its order, the Commission found that CNG is natural gas as defined in the NGA and that a sale of CNG for resale in interstate commerce invoked the Commission's jurisdiction under section 1(b) of the NGA. In addition, the Commission affirmed its determination in *Northern Illinois* of what constitutes "ultimate consumption" for purposes of section 1(c) of the NGA.[7]

III. Discussion

The Commission's jurisdiction under section 1(b) of the NGA extends to (1) the transportation of natural gas in interstate commerce; (2) sales of natural gas in interstate commerce for resale for ultimate public consumption; and (3) natural-gas companies engaged in such transportation or sales. The advent of technology facilitating the production and distribution of VNG on a widespread level [8] coupled with an apparent uncertainty on the part of the natural gas industry as to the scope of the Commission's jurisdiction in this area, is the impetus for this VNG rule.

One commenter, Amoco Production Company and Amoco Oil Company, although supportive of the rule, questioned the Commission's decision to exercise jurisdiction over the VNG sales regulated by this rule. Amoco asks the Commission to revisit the *Kansas-Nebraska* decision which, as described above, addressed the Commission's jurisdiction over interstate sales for resale of VNG. According to Amoco, the Commission's exercise of jurisdiction as proposed in the NOPR is too expansive and unjustified due to the fact that the consuming public in this instance will not be purchasing a public utility service but, rather, a vehicle fuel; Amoco asserts that the competitive motor vehicle fuel industry will protect the public from monopoly prices for VNG.

In response to Amoco's comments, we emphasize that the Commission is exercising jurisdiction over VNG sales only to the extent necessary to satisfy the Commission's mandate under the NGA with respect to sales for resale of natural gas (including VNG) in interstate commerce. To decline jurisdiction over such sales, as Amoco suggests, would contravene the Supreme Court's declaration that "[t]he Commission cannot 'disclaim' or waive jurisdiction conferred upon it by the Act." [9] In the alternative, Amoco requests that the Commission clarify that Amoco's sales for resale to its dealers are nonjurisdictional transactions. In response, we note that these sales would be nonjurisdictional to the extent that they are "first sales" as that term is defined in section 2(21) of the Natural Gas Policy Act of 1978 (NGPA).[10]

A. What is Vehicular Natural Gas?

For purposes of the VNG rule, the NOPR proposed to define "vehicular natural gas" or "VNG" as "natural gas that is ultimately used as a fuel in a motor vehicle."

Five commenting parties [11] suggest that this definition be broadened to specifically state that "VNG" includes liquefied natural gas (LNG), or derivatives thereof, as well as CNG to the extent such gas is used as a vehicle fuel. The concern that an ambiguity may arise as to whether the definition of "VNG" encompasses LNG is well-taken. Therefore, we will modify the definition

---

[1] 57 FR 9515 (Mar. 19, 1992).

[2] Section 1(c) of the Natural Gas Act provides that "[t]he provisions of this Act shall not apply to any person engaged in or legally authorized to engage in the transportation in interstate commerce or the sale in interstate commerce for resale, of natural gas received by such person from another person within or at the boundary of a State if all the natural gas so received is ultimately consumed within such State, or to any facilities used by such person for such transportation or sale, provided that the rates and service of such person and facilities may be subject to regulation by a State Commission.

[3] Northern Illinois Gas Co., 20 FERC ¶ 61,267, at p. 61,504.

[4] *Id* at 61,505.

[5] For purposes of this rule, CNG is synonymous with VNG.

[6] Kansas-Nebraska Natural Gas Company, Inc., 22 FERC ¶ 61,176 (1983), *reh'g denied*, 24 FERC ¶ 61,200 (1983).

[7] 22 FERC ¶ 61,176, at p. 61,307.

[8] The U.S. Department of Energy estimates that there are 30,000 natural gas vehicles in use today in the United States.

[9] Federal Power Commission v. Natural Gas Pipeline Co., 315 U.S. 575, 586 (1942).

[10] Certain categories of wholesale gas were not removed from the Commission's jurisdiction by section 601 of the NGPA. However, pursuant to the Natural Gas Wellhead Decontrol Act of 1989, all remaining "first sales" of gas will be removed from Commission jurisdiction by January 1, 1993.

[11] See comments by Cincinnati Gas & Electric Company; Union Pacific Fuels, Inc.; Consolidated Natural Gas Company; Washington Gas Light Company, Frederick Gas Company, Inc., and Shenandoah Gas Company; and the American Gas Association and the Natural Gas Vehicle Coalition

specifically to incorporate liquefied natural gas.[12]

The U.S. Department of Energy commented that the term "motor vehicle" may be too restrictive a term because "motor vehicle" is commonly defined to include only vehicles with rubber tires. We agree. Accordingly, because there are other types of vehicles that may utilize "VNG," (*e.g.*, boats [13] and locomotives), we shall modify the proposed definition. Specifically, the revised definition of "VNG" is as follows: "VNG is natural gas that will be used, in either a gaseous or liquefied state, as fuel in any self-propelled vehicle." This definition shall be broadly construed to include, among other things, automobiles, trucks, buses, trains, aircraft, boats, non-road farm vehicles, and construction vehicles, or any other self-propelled vehicle.

B. What Persons Are Subject to the Commission's Regulation Under the VNG Rule?

The NOPR provided that the VNG rule would issue a generic blanket certificate to (1) any local distribution company (LDC) that does not qualify for exemption under section 1(c) of the Natural Gas Act, (2) any holder of a service area determination under section 7(f)(1) of the NGA, and (3) any other person, including all interstate pipelines, all natural gas marketers, as well as other persons not otherwise natural-gas companies for purposes of the NGA.

This enumeration in the NOPR of the persons who require, and are eligible for, the authorization granted in the VNG rule was an effort to highlight those persons who might fall within the Commission's jurisdiction should they decide to engage in the sale for resale in interstate commerce of VNG. In the final VNG rule we shall consolidate this group of eligible VNG certificate holders as: "all persons who engage in sales for resale of VNG that are subject to the Commission's jurisdiction under section 1(b) of the NGA."

1. VNG Rule Impact on NGA Exemptions

We shall adopt the NOPR's proposed codification of the Commission's finding in *Northern Illinois Gas Company* that VNG "is 'ultimately consumed' within the meaning of the Natural Gas Act when the fuel is sold and delivered into the fuel tanks of the vehicles." [14] The Commission has determined, and a number of commenters have concurred, that this provision of the VNG rule will foster the sale of VNG, particularly by Hinshaw pipelines that might otherwise have been deterred from making such sales for fear of losing their exemption from Commission jurisdiction under section 1(c) of the NGA.[15] Regarding the comment by Associated Gas Distributors that there are circumstances in which VNG can be delivered into tanks that are then transferred to vehicular use, we will clarify that VNG is "ultimately consumed" under section 1(c) of the NGA when it is delivered into a vehicle fuel tank, even if the fuel tank is not attached to the vehicle at the time it is filled.

Certain commenters raised concerns regarding possible state deregulation of VNG sales.[16] That is, some states have, or may in the future, deregulate VNG sales that are within the ambit of state jurisdiction. Such sales include direct sales by LDCs and Hinshaws and sales for resale by Hinshaws. With respect to direct sales by Hinshaws or LDCs, the Commission has no jurisdiction over such transactions since they constitute local distribution.[17] However, if a state deregulates sales for resale of VNG that prior to deregulation had been covered by a Hinshaw exemption, the Commission would have jurisdiction with respect to these sales of VNG because the NGA section 1(c) proviso that such activities be subject to state regulation would not be satisfied.[18] In situations where a state has deregulated VNG sales by a Hinshaw pipeline, the pipeline will require the certificate authorized herein. As indicated in the NOPR, this rule issues limited-jurisdiction blanket certificates, which would not subject the holders to any recordkeeping or reporting requirements or any other regulation under the Natural Gas Act jurisdiction of the Commission. Hence, should a Hinshaw pipeline engage in VNG sales that require the certificate authorization issued by this VNG rule, that pipeline's exemption from jurisdiction would not be impaired as to the non-VNG activities that remain exempt under section 1(c) of the NGA.

Similarly, an LDC (not otherwise a Hinshaw pipeline) that engages in sales for resale of VNG will require the VNG certificate issued by this rule; however, an LDC's exemption from NGA jurisdiction pursuant to section 1(b) of the Act would also remain intact with respect to its non-VNG activities.

2. Rates Issues Concerning VNG Sales For Resale

The Commission recognizes that VNG is a relatively new form of vehicle fuel and that due to VNG's status as an "alternative fuel," most VNG powered vehicles have a dual capability to run on either gasoline or natural gas. This built-in competition leads the Commission to find that negotiated rates are appropriate for VNG sales for resale in interstate commerce. Rate determinations for direct VNG sales and other sales outside the Commission's NGA jurisdiction will be subject to the state agencies' determinations. The Commission is not preempting state regulation of VNG sales rates and services that are properly within the jurisdiction of the state agencies; rather, the VNG rule encompasses only those sales of VNG for resale in interstate commerce within the Commission's jurisdiction.[19]

The American Gas Association and the Natural Gas Vehicle Coalition submit that section 1(b) companies (presumably LDCs) should have the option of selling VNG at market rates or at a rate approved by the state public utility commission that was arrived at by rate basing the applicable VNG facilities. The latter scenario exceeds the authorization granted by this rule. As emphasized above, the VNG rule only authorizes negotiated rates—rates

[12] See Distrigas Corporation, 47 FPC 752, 759 (1972) (where the Federal Power Commission found that "LNG is natural gas as defined by section 2(5) of the [Natural Gas] Act."). See also Air Products and Chemical, Inc., 58 FERC ¶ 61,199 (1992) (where the Commission found that refrigerated liquid methane is tantamount to LNG and, therefore, is natural gas).

[13] See Washington Gas Light Company, 29 FERC ¶ 61,170 (1984) (where the Commission exempted from the section 7(c) certificate requirement the sale of compressed natural gas for experimental use as boat fuel).

[14] See footnote 3, *supra*.

[15] See comments of Public Service Electric and Gas Company and Battle Creek Gas Company, Michigan Gas Company and Southeastern Michigan Gas Company.

[16] See comments by Kansas Power and Light Company; National Association of Regulatory Utility Commissioners; and New Mexico Dept. of Energy, Minerals and Natural Resources and the Commissioner of Public Lands for the State of New Mexico.

[17] Section 1(b) of the NGA provides in relevant part that the provisions of the act "shall not apply to * * * the local distribution of natural gas or to the facilities used for such distribution."

[18] A state statute providing for regulation of VNG sales on the basis of market based rates or any other light-handed state regulatory approach to VNG sales would not vitiate a Hinshaw exemption.

[19] See comments by Delmarva Power & Light Company; Consolidated Natural Gas Company; and Washington Gas Light Company, Frederick Gas Company, Inc., and Shenandoah Gas Company.

arrived at through negotiation between the buyer and seller of VNG. The rate basing alternative suggested by these commenters would amount to a state commission authorized rate for a VNG sale subject to the Commission's NGA jurisdiction.

Tenneco Gas urges the Commission to include in the final VNG rule a provision that would allow pipelines to recover their investment in their VNG infrastructure from their traditional pipeline customers. Any such allowances would have to be based on evidence that the customers of a particular pipeline would benefit from the activity. Therefore, we will not further address this issue in this generic rulemaking proceeding. The Ohio Consumers' Counsel is concerned that the final rule "would create an unnecessary incentive or subsidization of VNG development, marketing, and use by LDC's at the expense of the captive residential customers." In addition, the Ohio Consumers' Counsel believes that the rule may have the effect of altering the demand for natural gas in such a way as to increase the cost of gas to existing users, including captive residential customers.

The Commission notes that although this rule will have the effect of removing regulatory barriers to VNG sales for resale, *supra*, such use will account for a small percentage of the total United States natural gas consumption.[20] We also recognize the possibility, as suggested by Enron Interstate Pipeline, that increased VNG use could decrease the per unit cost of gas service by increasing utilization of gas systems. In view of these considerations, the concerns of increased prices are too speculative to alter our public convenience and necessity finding underlying this rule. Moreover, state commissions may ensure that any increased costs incurred due to an LDC's decision to develop and market VNG are not shifted inappropriately to non-VNG users. Although, as noted by Ohio Consumers' Counsel, a state commission cannot find that a natural gas company's Commission approved sales rate is unjust and unreasonable, the state commission can determine if the LDC's purchase of VNG was prudent and the state can dictate how the LDC's costs are flowed through to its customers and can prevent an LDC from recovering its VNG related costs from the LDC's traditional utility customers.

Tacoma, Washington Public Schools asks the Commission to incorporate in the rule prohibitions regarding minimum take term contracts. In response, we note that the production and distribution of VNG is a developing industry with few established suppliers. Hence, we believe, and no evidence has been submitted to provide otherwise, that there are no competitive goals advanced by prohibiting such contracts.

C. What Is Required to Obtain a VNG Blanket Certificate?

In order to avoid unnecessary regulatory impediments to the use of VNG, the Commission has determined that the most expedient means of accomplishing our regulatory oversight of VNG is by providing the authorization granted in the VNG rule on a generic basis. This regulatory scheme will remove the additional costs and delays associated with filing for case specific authorization. Simply stated, a person will not need to file any type of application or any other filing prior to engaging in jurisdictional VNG sales when a person engages in a jurisdictional sale of VNG. The blanket VNG sales certificate will be deemed issued automatically prior to engagement in such activity. This rule will not require notice of acceptance or reporting of information concerning VNG sales. Consistent with General Instruction No. 2 of the Commission's Uniform System of Accounts,[21] pipelines must maintain sufficient accounting records so that they can identify and segregate VNG related costs. The Commission puts interstate natural gas pipelines on notice that they must separate and identify their VNG sales within their Purchased Gas Adjustment (PGA) mechanism.

AGD requests clarification that the VNG certificate holders will not be subject to any other NGA requirements, including abandonment and the obligation to serve in conjunction with the generic sales for resale authorization, the rule provides pregranted abandonment authority, under § 152.1(b)(2)(iii), such that upon expiration of any contractual term or upon termination of each individual sales arrangement the VNG sales authorization is deemed to be abandoned pursuant to section 7(b) of the NGA. Thus, the certificate holder's "obligation to serve" a VNG sales customer is determined by the terms of the sales contract.

IV. Environmental Analysis

Commission regulations require that an Environmental Assessment or an Environmental Impact Statement be prepared for any Commission action that may have a significant adverse effect on the human environment.[22] The Commission has categorically excluded certain actions from these requirements as not having a significant effect on the human environment.[23] The subject action here will not have a significant adverse impact on the human environment and falls within the categorical exemption provided in the Commission's regulations for sales of natural gas that require no construction of facilities. Therefore, an environmental assessment is unnecessary and was not prepared in this rulemaking.

V. Information Collection Requirements

The Office of Management and Budget's (OMB) regulations require that OMB approve certain information collection requirements imposed by agency rules.[24] However, this rule contains no new information collection requirements nor does it make any change to existing information collection requirements in part 152 (1902–0016) and therefore is not subject to OMB approval.

VI. Regulatory Flexibility Act Certification

The Commission certifies, pursuant to the Regulatory Flexibility Act (RFA),[25] that the VNG rule would not have a "significant economic impact on a substantial number of small entities."[26] The RFA is intended to ensure careful and informed agency consideration of rules that may significantly affect small entities and to encourage consideration of alternative approaches to minimize harm or burdens to small entities.

The Commission finds that this rule would not have a significant economic impact, within the meaning of the RFA, on a substantial number of small entities. This rule issues blanket certificates to all persons that make VNG sales for resale under the Commission's jurisdiction, thereby eliminating the necessity of such companies having to apply for case-specific authority for each sale of VNG for resale. In addition, this rule codifies

[20] For example, 5 to 8.4 million CNG-fueled vehicles would consume only 500 bcf, or less than three percent of the total U.S. natural gas consumption. Automakers, Fuel Suppliers Enter Era of Fuel Diversity, Fuel Reformulation, January/February 1992 (Information Resources, Inc.).

[21] 18 CFR Part 201, General Instruction No. 2.

[22] Order No. 486, Regulations Implementing National Environmental Policy Act, 52 FR 47897 (Dec. 17, 1987), FERC Stats. & Regs. ¶ 30,783, *codified at* 18 CFR part 380.

[23] 18 CFR 380.4.

[24] 5 CFR part 1320.

[25] 5 U.S.C. 601–612.

[26] 5 U.S.C. 605(b).

the Commission's prior determination that a Hinshaw pipeline does not lose its NGA section 1(c) exemption from the Commission's jurisdiction by reason of selling VNG that may eventually move across state lines in a VNG-powered vehicle.

VII. Effective Date

This final rule is effective on August 24, 1992.

List of Subjects in 18 CFR Part 152

Natural gas, Reporting and recordkeeping requirements.

In consideration of the foregoing, the Commission amends part 152, chapter I, title 18, *Code of Federal Regulations*, as set forth below.

By the Commission.

Linwood A. Watson, Jr.,

Acting Secretary.

1. The authority citation for part 152 is revised to read as follows:

Authority: 15 U.S.C. 717–717w, 3301–3432; 42 U.S.C. 7101–7352.

2. The title of part 152 is revised to read as follows:

PART 152—APPLICATION FOR EXEMPTION FROM THE PROVISIONS OF THE NATURAL GAS ACT PURSUANT TO SECTION 1(C) THEREOF AND ISSUANCE OF BLANKET CERTIFICATES AUTHORIZING CERTAIN SALES FOR RESALE

3. In § 152.1, the heading is revised, the existing text is redesignated paragraph (a), and a new paragraph (b) is added to read as follows:

§ 152.1 Exemption applications and blanket certificates.

(a) * * *

(b)(1)(i) For purposes of the Commission's regulations implementing the Natural Gas Act, "vehicular natural gas" or "VNG" means natural gas that will be used, in either a gaseous or liquefied state, as fuel in any self-propelled vehicle.

(ii) For purposes of the Commission's regulations implementing the Natural Gas Act, vehicular natural gas, or VNG, is deemed to be ultimately consumed in the state in which the gas is physically delivered into the vehicle's fuel tank regardless of whether the tank is attached to the vehicle at the time it is filled.

(2)(i) Blanket certificates of public convenience and necessity are issued pursuant to section 7(c) of the Natural Gas Act to all persons that engage in sales for resale of VNG that are subject to the Commission's authority under section 1(b) of the NGA, such authorization to be effective upon that person's engagement in the jurisdictional sale. A blanket certificate issued under this paragraph (b)(2)(i) is a certificate of limited jurisdiction which will not subject the certificate holder to any other regulation under the Natural Gas Act jurisdiction of the Commission by virtue of transactions under the certificate. Such certificate will not impair the continued validity of any Natural Gas Act exemption from Commission jurisdiction.

(ii) A blanket certificate issued under paragraph (b)(2)(i) of this section authorizes the holder to make sales of VNG for resale in interstate commerce at market rates.

(iii) Abandonment of the sales service authorized in paragraph (b)(2)(i) of this section is authorized pursuant to section 7(b) of the Natural Gas Act upon the expiration of the contractual term or upon termination of each individual sales arrangement.

Note: This appendix will not be published in the Code of Federal Regulations.

Appendix—Commenters

Docket No. RM92–2–000

American Gas Association and Natural Gas Vehicle Coalition
Amoco Production Company and Amoco Oil Company
Associated Gas Distributors
Atmos Energy Corporation
Battle Creek Gas Company, Michigan Gas Company and Southeastern Michigan Gas Company
California Natural Gas Vehicle Coalition
Cincinnati Gas & Electric Company
Colorado Interstate Gas Company
Consolidated Natural Gas Company
Consumers Power Company
Delmarva Power & Light Company
Enron Interstate Pipelines
Equitable Gas Company
Indiana Gas Company, Inc.
Interstate Natural Gas Association of America
K N Energy, Inc.
Kansas Power and Light Company
Louisiana, State of
National Association of Regulatory Utility Commissioners
Natural Gas Supply Association
New Mexico Department of Energy, Minerals and Natural Resources and the Commissioner of Public Lands for the State of New Mexico
Northern Illinois Gas Company
Ohio Consumers' Counsel
Peoples Gas Light and Coke Company and North Shore Gas Company
Public Service Company, Western Gas Supply Company, and Cheyenne Light, Fuel and Power Company of Colorado
Public Service Electric and Gas Company
San Diego Gas & Electric Company
Southern California Gas Company
Southern Union Econofuel Company
Tacoma, Washington Public Schools
Tenneco Gas
Texas Gas Transmission Corporation
Union Pacific Fuels, Inc.
United States Department of Energy
Washington Gas Light Company, Frederick Gas Company, Inc., and Shenandoah Gas Company

[FR Doc. 92–17493 Filed 7–23–92; 8:45 am]

BILLING CODE 6717–01–M

DEPARTMENT OF LABOR

Employment and Training Administration

20 CFR Part 655

RIN 1205–AA90

Wage and Hour Division

29 CFR Part 506

RIN 1215–AA76

Attestations by Employers Using Alien Crewmembers for Longshore Activity in U.S. Ports; Correction

AGENCIES: Employment and Training Administration, Labor; and Wage and Hour Division, Employment Standards Administration, Labor.

ACTION: Correction to extension of effective dates.

SUMMARY: This document contains corrections to three documents which extended the effective dates of an interim final rule. The interim final rule concerned the filing and enforcement of attestations by employers seeking to use certain alien crewmembers to perform longshore work at U.S. ports. This document corrects the three extension documents which were published on Wednesday, April 1, 1992 (57 FR 10989), Wednesday, July 1, 1992 (57 FR 29203) and Friday, July 10, 1992 (57 FR 30640).

EFFECTIVE DATE: July 24, 1992.

FOR FURTHER INFORMATION CONTACT: On 20 CFR part 655, subpart F, and 29 CFR part 506, subpart F, contact Flora Richardson, Chief, Division of Foreign Labor Certifications, United States Employment Service, Employment and Training Administration, Department of Labor, room N–4456, 200 Constitution Avenue, NW., Washington, DC 20210. Telephone: (202) 535–0169 (this is not a toll-free number).

On 20 CFR part 655, subpart G, and 29 CFR part 506, subpart G, contact Solomon Sugarman, Wage and Hour Division, Employment Standards Administration, Department of Labor, room S-3502, 200 Constitution Avenue, NW., Washington, DC 20210. Telephone: (202) 523-7605 (this is not a toll-free number).

SUPPLEMENTARY INFORMATION:

Background

On May 30, 1991, the Department of Labor (DOL) published an interim final rule adding, at 20 CFR part 655, subparts F and G, and at 29 CFR part 506, subparts F and G, regulations for filing and enforcement of attestations by employers seeking to use certain alien crewmembers to perform longshore work at U.S. ports, pursuant to section 258 of the Immigration and Nationality Act. 56 FR 24648 (May 30, 1991); see 8 U.S.C. 1288. Public comments were invited through July 29, 1991, and the interim final rule was effective from May 28, 1991 through December 31, 1991. The expiration date later was extended through March 31, 1992, 57 FR 182 (January 3, 1992). It was further extended through June 30, 1992, 57 FR 10989 (April 1, 1992), and later extended through July 10, 1992, 57 FR 29203 (July 1, 1992). It was thereafter extended through September 8, 1992, 57 FR 30640 (July 10, 1992).

Need for Correction

Due to inadvertence, the three extension documents, which were published on April 1, 1992, July 1, 1992, and July 10, 1992, contained partial errors in that the words "29 CFR part 507" were used in certain places. The correct words are "29 CFR part 506". This document corrects that error.

Correction of Publications

A. Accordingly, the publication on April 1, 1992, of FR Doc. 92-7616, extending the expiration date of the interim final rule through June 30, 1992, is corrected as follows:

Paragraph 1. On page 10989, in the second column, in the heading of the document, the words "29 CFR part 507" are corrected to read "29 CFR part 506".

Paragraph 2. On page 10989, in the third column, in the first sentence of the category for "**SUPPLEMENTARY INFORMATION,**" which is on line 5 of that category, the words "29 CFR part 507" are corrected to read "29 CFR part 506".

B. Accordingly, the publication on July 1, 1992, of FR Doc. 92-15522, extending the expiration date of the interim final rule through July 10, 1992, is corrected to read as follows:

Paragraph 1. On page 29203, in the third column, in the heading of the document, the words "29 CFR part 507" are corrected to read "29 CFR part 506".

Paragraph 2. On page 29204, in the first column, in the first sentence of the category for "**SUPPLEMENTARY INFORMATION,**" which is on line 5 of that category, the words "29 CFR part 507" are corrected to read "29 CFR part 506".

C. Accordingly, the publication on July 10, 1992, of FR Doc. 92-16317, extending the expiration date of the interim final rule through September 8, 1992, is corrected as follows:

Paragraph 1. On page 30640, in the third column, in the heading of the document, the words "29 CFR part 507" are corrected to read "29 CFR part 506".

Paragraph 2. On page 30640, in the third column, in the first sentence of the category for "**SUPPLEMENTARY INFORMATION,**" which is on line 5 of that category, the words "29 CFR part 507" are corrected to read "29 CFR part 506".

Signed at Washington, D.C. this 16th day of July, 1992.

Lynn Martin,

Secretary of Labor.

[FR Doc. 92-17543 Filed 7-23-92; 8:45 am]

BILLING CODE 4510-30-M 4510-27-M

DEPARTMENT OF HEALTH AND HUMAN SERVICES

Food and Drug Administration

21 CFR Part 540

Penicillin Antibiotic Drugs for Animal Use; Sterile Penicillin G Procaine Suspension

AGENCY: Food and Drug Administration, HHS.

ACTION: Final rule.

SUMMARY: The Food and Drug Administration (FDA) is amending the animal drug regulations to reflect approval of a supplemental new animal drug application (NADA) filed by Norbrook Laboratories, Ltd. The NADA provides for the use of sterile penicillin G procaine suspension in cattle, sheep, swine, and horses for the treatment of bacterial infections due to penicillin susceptible microorganisms. The supplement provides for reduction of the milk withholding period from 72 hours to 48 hours.

EFFECTIVE DATE: July 24, 1992.

FOR FURTHER INFORMATION CONTACT: Naba K. Das, Center for Veterinary Medicine (HFV-133), Food and Drug Administration, 7500 Standish Pl., Rockville, MD 20855, 301-295-8659.

SUPPLEMENTARY INFORMATION: Norbrook Laboratories, Ltd., Station Works, Newry BT35 6JP, Northern Ireland, has filed a supplement to NADA 65-010. The NADA provides for the use of penicillin G procaine suspension in cattle, sheep, swine, and horses for the treatment of bacterial infections due to penicillin susceptible microorganisms, specifically for intramuscular use for cattle and sheep for the treatment of bacterial pneumonia caused by *Pasteurella multocida*, swine for erysipelas caused by *Erysipelothrix insidiosa*, and horses for strangles caused by *Streptococcus equi*. The supplement provides for reduction of the milk withholding period from 72 hours (6 milkings) to 48 hours. The supplemental NADA is approved as of July 16, 1992, and the regulations are amended in 21 CFR 540.274b to reflect the approval. The basis for approval is discussed in the freedom of information summary.

Under section 512(c)(2)(F)(iii) of the Federal Food, Drug, and Cosmetic Act (21 U.S.C. 360b(c)(2)(F)(iii)), this approval does not qualify for marketing exclusivity because no new clinical or field investigations (other than bioequivalence or residue studies) and no new human food safety studies (other than bioequivalence or residue studies) were essential to the approval and conducted or sponsored by the applicant.

In accordance with the freedom of information provisions of part 20 (21 CFR part 20) and § 514.11(e)(2)(ii) (21 CFR 514.11(e)(2)(ii)), a summary of human food safety data and information submitted to support approval of this supplement may be seen in the Dockets Management Branch (HFA-305), Food and Drug Administration, Rm. 1-23, 12420 Parklawn Dr., Rockville, MD 20857, from 9 a.m. to 4 p.m., Monday through Friday.

The agency has determined under 21 CFR 25.24(d)(1)(i) that this action is of a type that does not individually or cumulatively have a significant effect on the human environment. Therefore, neither an environmental assessment nor an environmental impact statement is required.

List of Subjects in 21 CFR Part 540

Animal drugs, Antibiotics.

Therefore, under the Federal Food, Drug, and Cosmetic Act and under authority delegated to the Commissioner of Food and Drugs and redelegated to the Center for Veterinary Medicine, 21 CFR Part 540 is amended as follows:

PART 540—PENICILLIN ANTIBIOTIC DRUGS FOR ANIMAL USE

1. The authority citation for 21 CFR part 540 continues to read as follows:

Authority: Secs. 507, 512 of the Federal Food, Drug, and Cosmetic Act (21 U.S.C. 357, 360b).

§ 540.274b [Amended]

2. Section 540.274b *Procaine penicillin G aqueous suspension* is amended in paragraph (c)(3)(iv)(*c*) by removing the phrase "72 hours (six milkings)" and adding in its place the phrase "48 hours".

Dated: July 16, 1992.

Robert C. Livingston,

Director, Office of New Animal Drug Evaluation, Center for Veterinary Medicine.

[FR Doc. 92-17499 Filed 7-23-92; 8:45 am]

BILLING CODE 4160-01-F

DEPARTMENT OF STATE

Office of the Legal Adviser

22 CFR Part 172

[Public Notice 1658]

Litigation: Service of Process; Production of Official Information and Testimony of Department of State Employees as Witnesses

AGENCY: Office of the Legal Adviser, State.

ACTION: Final rule.

SUMMARY: This final rule establishes and clarifies policies, practices, responsibilities, and procedures for the service of legal process upon the Department of State (DOS), its officers, and employees and the production of official DOS information and the appearance of and testimony by DOS employees as witnesses in connection with litigation. This rule is procedural in nature.

EFFECTIVE DATE: This rule is effective July 24, 1992.

ADDRESSES: Office of the Legal Adviser, U.S. Department of State, Washington, DC 20520-6310.

FOR FURTHER INFORMATION CONTACT: Mr. Jim Hergen, Assistant Legal Adviser for East Asian and Pacific Affairs, Office of the Legal Adviser, U.S. Department of State, telephone (202) 647-3044.

SUPPLEMENTARY INFORMATION: This final rule was published as a proposed rule for public comment in 57 FR 20656 (May 14, 1992). No public comments were made with respect to the proposed rule.

List of Subjects in 22 CFR Part 172

Administrative practice and procedure, Courts, Government employees, Investigations.

Accordingly, 22 CFR chapter I is amended by adding a new part 172 to read as follows:

PART 172—SERVICE OF PROCESS; PRODUCTION OR DISCLOSURE OF OFFICIAL INFORMATION IN RESPONSE TO COURT ORDERS, SUBPOENAS, NOTICES OF DEPOSITIONS, REQUESTS FOR ADMISSIONS, INTERROGATORIES, OR SIMILAR REQUESTS OR DEMANDS IN CONNECTION WITH FEDERAL OR STATE LITIGATION; EXPERT TESTIMONY

Sec.
172.1 Purpose and scope; definitions.
172.2 Service of summonses and complaints.
172.3 Service of subpoenas, court orders, and other demands or requests for official information or action.
172.4 Testimony and production of documents prohibited unless approved by appropriate Department officials.
172.5 Procedure when testimony or production of documents is sought; general.
172.6 Procedure when response to demand is required prior to receiving instructions.
172.7 Procedure in the event of an adverse ruling.
172.8 Considerations in determining whether the Department will comply with a demand or request.
172.9 Prohibition on providing expert or opinion testimony.

Authority: 5 U.S.C. 301; 8 U.S.C. 1202(f); 22 U.S.C. 2658, 2664, 3926.

§ 172.1 Purpose and scope; definitions.

(a) This part sets forth the procedures to be followed with respect to:

(1) Service of summonses and complaints or other requests or demands directed to the Department of State (Department) or to any Department employee or former employee in connection with federal or state litigation arising out of or involving the performance of official activities of the Department; and

(2) The oral or written disclosure, in response to subpoenas, orders, or other requests or demands of federal or state judicial or quasi-judicial authority (collectively, "demands"), whether civil or criminal in nature, or in response to requests for depositions, affidavits, admissions, responses to interrogatories, document production, or other litigation-related matters, pursuant to the Federal Rules of Civil Procedure, the Federal Rules of Criminal Procedure, or applicable state rules (collectively, "requests"), of any material contained in the files of the Department, any information relating to material contained in the files of the Department, or any information acquired while the subject of the demand or request is or was an employee of the Department as part of the performance of that person's duties or by virtue of that person's official status.

(b) For purposes of this part, and except as the Department may otherwise determine in a particular case, the term "employee" includes the Secretary and former Secretaries of State, and all employees and former employees of the Department of State or other federal agencies who are or were appointed by, or subject to the supervision, jurisdiction, or control of the Secretary of State or his Chiefs of Mission, whether residing or working in the United States or abroad, including United States nationals, foreign nationals, and contractors.

(c) For purposes of this part, the term "litigation" encompasses all pre-trial, trial, and post-trial stages of all judicial or administrative actions, hearings, investigations, or similar proceedings before courts, commissions, boards (including the Board of Appellate Review), or other judicial or quasi-judicial bodies or tribunals, whether criminal, civil, or administrative in nature. This part governs, *inter alia*, responses to discovery requests, depositions, and other pre-trial, trial, or post-trial proceedings, as well as responses to informal requests by attorneys or others in situations involving litigation. However, this part shall not apply to any claims by Department of State employees (present or former), or applicants for Department employment, for which jurisdiction resides with the U.S. Equal Employment Opportunity Commission; the U.S. Merit Systems Protection Board; the Office of Special Counsel; the Federal Labor Relations Authority; the Foreign Service Labor Relations Board; the Foreign Service Grievance Board; or a labor arbitrator operating under a collective bargaining agreement between the Department and a labor organization representing Department employees; or their successor agencies or entities.

(d) For purposes of this part, "official information" means all information of any kind, however stored, that is in the custody and control of the Department, relates to information in the custody and control of the Department, or was acquired by Department employees as part of their official duties or because of their official status within the Department while such individuals were employed by or served on behalf of the Department.

(e) Nothing in this Part affects disclosure of information under the Freedom of Information Act (FOIA), 5 U.S.C. 552, the Privacy Act, 5 U.S.C. 552a, Executive Order 12356 on national security information (3 CFR, 1982 Comp., p. 166), the Government in the Sunshine Act, 5 U.S.C. 552b, the Department's implementing regulations in 22 CFR part 171 or pursuant to congressional subpoena. Nothing in this part otherwise permits disclosure of information by the Department or its employees except as provided by statute or other applicable law.

(f) This part is intended only to inform the public about Department procedures concerning the service of process and responses to demands or requests and is not intended to and does not create, and may not be relied upon to create any right or benefit, substantive or procedural, enforceable at law by a party against the Department or the United States.

(g) Nothing in this part affects:

(1) The disclosure of information during the course of legal proceedings in non-United States courts, commissions, boards, or other judicial or quasi-judicial bodies or tribunals; or

(2) The rules and procedures, under applicable U.S. law and international conventions, governing diplomatic and consular immunity.

(h) Nothing in this part affects the disclosure of official information to other federal agencies or Department of Justice attorneys in connection with litigation conducted on behalf or in defense of the United States, its agencies, officers, and employees, or to federal, state, local, or foreign prosecuting and law enforcement authorities in conjunction with criminal law enforcement investigations, prosecutions, or other proceedings, *e.g.*, extradition, deportation.

§ 172.2 Service of summonses and complaints.

(a) Only the Executive Office of the Office of the Legal Adviser (L/EX) is authorized to receive and accept summonses or complaints sought to be served upon the Department or Department employees. All such documents should be delivered or addressed to The Executive Office, Office of the Legal Adviser, room 5519, United States Department of State, 2201 C Street, NW., Washington, DC 20520–6310.

(b) In the event any summons or complaint described in § 172.1(a) is delivered to an employee of the Department other than in the manner specified in this part, such attempted service shall be ineffective, and the recipient thereof shall either decline to accept the proffered service or return such document under cover of a written communication which directs the person attempting to make service to the procedures set forth herein.

(c) Except as otherwise provided §§ 172.2(d) and 173.3(c), the Department is not an authorized agent for service of process with respect to civil litigation against Department employees purely in their personal, non-official capacity. Copies of summonses or complaints directed to Department employees in connection with legal proceedings arising out of the performance of official duties may, however, be served upon L/EX.

(d) Although the Department is not an agent for the service of process upon its employees with respect to purely personal, non-official litigation, the Department recognizes that its employees stationed overseas should not use their official positions to evade their personal obligations and will, therefore, counsel and encourage Department employees to accept service of process in appropriate cases, and will waive applicable diplomatic or consular privileges and immunities when the Department determines that it is in the interest of the United States to do so.

(e) Documents for which L/EX accepts service in official capacity only shall be stamped "Service Accepted in Official Capacity Only". Acceptance of service shall not constitute an admission or waiver with respect to jurisdiction, propriety of service, improper venue, or any other defense in law or equity available under the laws of rules applicable for the service of process.

§ 172.3 Service of subpoenas, court orders, and other demands or requests for official information or action.

(a) Except in cases in which the Department is represented by legal counsel who have entered an appearance or otherwise given notice of their representation, only L/EX is authorized to receive and accept subpoenas, or other demands or requests directed to the Department, or any component thereof, or its employees, or former employees, whether civil or criminal nature, for

(1) Material, including documents, contained in the files of the Department;

(2) Information, including testimony, affidavits, declarations, admissions, responses to interrogatories, or informal statements, relating to material contained in the files of the Department or which any Department employee acquired in the course and scope of the performance of his official duties;

(3) Garnishment or attachment of compensation of current or former employees; or

(4) The performance or non-performance of any official Department duty.

(b) In the event that any subpoena, demand, or request is sought to be delivered to a Department employee (including former employees) other than in the manner prescribed in paragraph (a) of this section, such attempted service shall be ineffective. Such employee shall, after consultation with the Office of the Legal Adviser, decline to accept the subpoena, demand or request or shall return them to the server under cover of a written communication referring to the procedures prescribed in this part.

(c) Except as otherwise provided in this part, the Department is not an agent for service, or otherwise authorized to accept on behalf of its employees any subpoenas, show-cause orders, or similar compulsory process of federal or state courts, or requests from private individuals or attorneys, which are not related to the employees' official duties except upon the express, written authorization of the individual Department employee to whom such demand or request is directed.

(d) Acceptance of such documents by L/EX does not constitute a waiver of any defenses that might otherwise exist with respect to service under the Federal Rules of Civil or Criminal Procedure or other applicable rules.

§ 172.4 Testimony and production of documents prohibited unless approved by appropriate Department officials.

(a) No employee of the Department shall, in response to a demand or request in connection with any litigation, whether criminal or civil, provide oral or written testimony by deposition, declaration, affidavit, or otherwise concerning any information acquired while such person is or was an employee of the Department as part of the performance of that person's official duties or by virtue of that persons's official status, unless authorized to do so by the Director General of the Foreign Service and Director of Personnel (M/DGP) or the Legal Adviser (L), or delegates of either, following consultation between the two bureaus, or as authorized in § 172.4(b).

(b) With respect to the official functions of the Passport Office, the Visa Office, and the Office of Citizens Services, the Assistant Secretary of State for Consular Affairs or delegate thereof may, subject to concurrence by the Office of the Legal Adviser,

authorize employees to provide oral or written testimony.

(c) No employee shall, in response to a demand or request in connection with any litigation, produce for use at such proceedings any document or any material acquired as part of the performance of that employee's duties or by virtue of that employee's official status, unless authorized to do so by the Director General of the Foreign Service and Director of Personnel, the Legal Adviser, or the Assistant Secretary of State for Consular Affairs, or the delegates thereof, as appropriate, following consultations between the concerned bureaus.

§ 172.5 Procedure when testimony or production of documents is sought; general.

(a) If official Department information is sought, through testimony or otherwise, by a request or demand, the party seeking such release or testimony must (except as otherwise required by federal law or authorized by the Office of the Legal Adviser) set forth in writing, and with as much specificity as possible, the nature and relevance of the official information sought. Where documents or other materials are sought, the party should provide a description using the types of identifying information suggested in 22 CFR 171.10(a) and 171.31. Subject to § 172.7, Department employees may only produce, disclose, release, comment upon, or testify concerning those matters which were specified in writing and properly approved by the appropriate Department official designated in § 172.4. See United States ex rel. Touhy v. Ragen, 340 U.S. 462 (1951). The Office of the Legal Adviser may waive this requirement in appropriate circumstances.

(b) To the extent it deems necessary or appropriate, the Department may also require from the party seeking such testimony or documents a plan of all reasonably foreseeable demands, including but not limited to the names of all employees and former employees from whom discovery will be sought, areas of inquiry, expected duration of proceedings requiring oral testimony, and identification of potentially relevant documents.

(c) The appropriate Department official designated in § 172.2 will notify the Department employee and such other persons as circumstances may warrant of its decision regarding compliance with the request or demand.

(d) The Office of the Legal Adviser will consult with the Department of Justice regarding legal representation for Department employees in appropriate cases.

§ 172.6 Procedure when response to demand is required prior to receiving instructions.

(a) If a response to a demand is required before the appropriate Department official designated in section 172.4 renders a decision, the Department will request that either a Department of Justice attorney or a Department attorney designated for the purpose:

(1) Appear with the employee upon whom the demand has been made;

(2) Furnish the court or other authority with a copy of the regulations contained in this Part;

(3) Inform the court or other authority that the demand has been, or is being, as the case may be, referred for the prompt consideration of the appropriate Department official; and

(4) Respectively request the court or authority to stay the demand pending receipt of the requested instructions.

(b) In the event that an immediate demand for production or disclosure is made in circumstances which would preclude the proper designation or appearance of a Department of Justice or Department attorney on the employee's behalf, the employee shall respectfully request the demanding court or authority for a reasonable stay of proceedings for the purpose of obtaining instructions from the Department.

§ 172.7 Procedure in the event of an adverse ruling.

If the court or other judicial or quasi-judicial authority declines to stay the effect of the demand in response to a request made pursuant to § 172.6, or if the court or other authority rules that the demand must be complied with irrespective of the Department's instructions not to produce the material or disclose the information sought, the employee upon whom the demand has been made shall respectfully decline to comply with the demand, citing this part and *United States ex rel. Touhy* v. *Ragen*, 340 U.S. 462 (1951).

§ 172.8 Considerations in determining whether the Department will comply with a demand or request.

(a) In deciding whether to comply with a demand or request, Department officials and attorneys shall consider, among others:

(1) Whether such compliance would be unduly burdensome or otherwise inappropriate under the applicable rules of discovery or the rules of procedure governing the case or matter in which the demand arose;

(2) Whether compliance is appropriate under the relevant substantive law concerning privilege or disclosure of information;

(3) The public interest;

(4) The need to conserve the time of Department employees for the conduct of official business;

(5) The need to avoid spending the time and money of the United States for private purposes;

(6) The need to maintain impartiality between private litigants in cases where a substantial government interest is not implicated;

(7) Whether compliance would have an adverse effect on performance by the Department of its mission and duties; and

(8) The need to avoid involving the Department in controversial issues not related to its mission.

(b) Among those demands and requests in response to which compliance will not ordinarily be authorized are those with respect to which, *inter alia*, any of the following factors exist:

(1) Compliance would violate a statute or a rule of procedure;

(2) Compliance would violate a specific regulation or executive order;

(3) Compliance would reveal information properly classified in the interest of national security;

(4) Compliance would reveal confidential commercial or financial information or trade secrets without the owner's consent;

(5) Compliance would reveal the internal deliberative processes of the Executive Branch; or

(6) Compliance would potentially impede or prejudice an on-going law enforcement investigation.

§ 172.9 Prohibition on providing expert or opinion testimony.

(a) Except as provided in this section, and subject to 5 CFR 2635.805, Department employees shall not provide opinion or expert testimony based upon information which they acquired in the scope and performance of their official Department duties, except on behalf of the United States or a party represented by the Department of Justice.

(b) Upon a showing by the requestor of exceptional need or unique circumstances and that the anticipated testimony will not be adverse to the interests of the United States, the appropriate Department official designated in § 172.4 may, consistent with 5 CFR 2635.805, in their discretion and with the concurrence of the Office of the Legal Adviser, grant special, written authorization for Department

employees to appear and testify as expert witnesses at no expense to the United States.

(c) If, despite the final determination of the appropriate Department official designated in § 172.4, a court of competent jurisdiction or other appropriate authority orders the appearance and expert or opinion testimony of a Department employee, such employee shall immediately inform the Office of the Legal Adviser of such order. If the Office of the Legal Adviser determines that no further legal review of or challenge to the court's order will be made, the Department employee shall comply with the order. If so directed by the Office of the Legal Adviser, however, the employee shall respectfully decline to testify. *See United States ex rel. Touhy* v. *Ragen*, 340 U.S. 462 (1951).

Dated: June 15, 1992.

Edwin D. Williamson,

Legal Adviser.

[FR Doc. 92-16941 Filed 7-23-92; 8:45 am]

BILLING CODE 4710-08-M

POSTAL SERVICE

39 CFR Part 111

Indemnity Claims

AGENCY: Postal Service.

ACTION: Final rule.

SUMMARY: The Postal Service is amending its regulations to extend the waiting period from 45 days to 60 before a claim for loss of a COD article may be filed. In addition, regulations are changed to allow a claim for loss of an insured article to be filed only by the mailer. This change is consistent with filing procedures for insured, registered, COD, and Express Mail, and the provision of the Domestic Mail Classification Schedule. Since loss claims will be filed only by the mailer, the procedures for addressee filing in 149.333 are eliminated.

EFFECTIVE DATE: The final rule is effective with Domestic Mail Manual (DMM) Issue 44 (September 20, 1992).

FOR FURTHER INFORMATION CONTACT: Mary Bronson, (202) 268-5181.

SUPPLEMENTARY INFORMATION: A recent Postal Inspection Service audit found that the 45-day waiting period before a claim for loss of a COD article may be filed is insufficient. Claims are filed for COD articles that are in the process of being returned to the sender because they are unclaimed by the addressee during the 30-day holding period at the delivery post office. The increased waiting period to 60 days will allow time to transport the article to its destination, return it to the sender if unclaimed, and accommodate the required holding period if the post office is unable to deliver the article after the first attempt.

List of Subjects in 39 CFR Part 111

Postal Service.

PART 111—[AMENDED]

1. The authority citation for 39 CFR part 111 continues to read as follows:

Authority: 5 U.S.C. 552(a); 39 U.S.C. 101, 401, 403, 404, 3001-3011, 3201-3219, 3403-3406, 3621, 5001.

2. Amend 149.21, 149.222, 149.312, 149.333, and 914.18 of the Domestic Mail Manual to read as follows:

149 INDEMNITY CLAIMS

* * * * *

149.2 General Instructions for Filing Claims on Insured, COD, and Registered Mail

149.21 Who May File

A claim for complete loss (wrapper and contents) of an insured, COD, or registered article may be filed only by the mailer. All claims for loss of contents, partial loss, or damage may be filed by the mailer or addressee.

* * * * *

149.22 When to File

* * * * *

149.222 Loss Claims

* * * * *

b. COD. For COD articles, a claim may not be filed until 60 days after the date of mailing, except as specified in 149.222c.

c. Exceptions. Claims for insured and COD articles originating at or addressed to post offices outside the contiguous United States (including insured articles to APO and FPO addresses) may not be filed: (1) until 60 days after the date of mailing for articles sent by First-Class, SAM or PAL mail; and (2) until 75 days after the date of mailing for parcels sent by surface ocean transportation.

* * * * *

149.3 Insured and COD Claims

149.31 How to File

* * * * *

149.312 Evidence of Loss or Damage

[Delete 149.312b and renumber 149.312c and 149.312d as 149.312b and 149.312c, respectively.]

* * * * *

149.33 Processing Form 3812

* * * * *

149.333 Forwarding Claims

[Delete 149.333b and renumber 149.333c, 149.333d, and 149.333e as 149.333b, 149.333c, and 149.333d, respectively.]

* * * * *

914 COLLECT ON DELIVERY (COD) MAIL

914.1 Description

* * * * *

914.18 Delays in Remittance

[Revise the first two sentences as follows:]

"Mailers are encouraged to report instances in which there has been undue delay in receiving money orders or recipient's checks in payment for COD articles. The mailer should normally receive payment within 60 days of the date of mailing (75 days for parcels sent by surface ocean transportation)."

A transmittal letter making these changes in the pages of the Domestic Mail Manual will be published and transmitted to subscribers automatically. Notice of issuance of the transmittal letter will be published in the Federal Register as provided by 39 CFR 111.3.

Stanley F. Mires,

Assistant General Counsel Legislative Division.

[FR Doc. 92-17568 Filed 7-23-92; 8:45 am]

BILLING CODE 7710-12-M

FEDERAL EMERGENCY MANAGEMENT AGENCY

44 CFR Part 65

Changes in Flood Elevation Determinations

AGENCY: Federal Insurance Administration, FEMA.

ACTION: Final rule.

SUMMARY: Modified base (100-year) flood elevations are finalized for the communities listed below. These modified elevations will be used to calculate flood insurance premium rates for new buildings and their contents.

EFFECTIVE DATES: The effective dates for these modified base flood elevations are indicated on the following table and revise the Flood Insurance Rate Map(s) (FIRMs) in effect for each listed community prior to this date.

ADDRESSES: The modified base flood elevations for each community are

available for inspection at the office of the Chief Executive Officer of each community. The respective addresses are listed in the following table.

FOR FURTHER INFORMATION CONTACT: William R. Locke, Chief, Risk Studies Division, Federal Insurance Administration, 500 C Street, SW., Washington, DC 20472, (202) 646-2754.

SUPPLEMENTARY INFORMATION: The Federal Emergency Management Agency gives notice of the final determinations of modified base flood elevations for each community listed. These modified elevations have been published in newspapers of local circulation and ninety (90) days have elapsed since that publication. The Administrator has resolved any appeals resulting from this notification.

The modified base (100-year) flood elevations are not listed for each community in this notice. However, this rule includes the address of the Chief Executive Officer of the community where the modified base flood elevation determinations are available for inspection.

The modifications are made pursuant to section 206 of the Flood Disaster Protection Act of 1973, 42 U.S.C. 4105, and are in accordance with the National Flood Insurance Act of 1968, 42 U.S.C. 4001 *et seq.*, and with 44 CFR part 65.

For rating purposes, the currently effective community number is shown and must be used for all new policies and renewals.

The modified base (100-year) flood elevations are the basis for the floodplain management measures that the community is required to either adopt or to show evidence of being already in effect in order to qualify or to remain qualified for participation in the National Flood Insurance Program.

These modified elevations, together with the floodplain management criteria required by 44 CFR 60.3, are the minimum that are required. They should not be construed to mean that the community must change any existing ordinances that are more stringent in their floodplain management requirements. The community may at any time enact stricter requirements of its own, or pursuant to policies established by other Federal, state or regional entities.

These modified base flood elevations shall be used to calculate the appropriate flood insurance premium rates for new buildings and their contents and for second layer coverage on existing buildings and their contents.

The changes in base flood elevations are in accordance with 44 CFR 65.4.

National Environmental Policy Act

This rule is categorically excluded from the requirements of 44 CFR Part 10, Environmental Consideration. No environmental impact assessment has been prepared.

Regulatory Flexibility Act

This rule will not have a significant economic impact on a substantial number of small entities in accordance with the Regulatory Flexibility Act, 5 U.S.C. 601 et seq.

Regulatory Impact Analysis

This proposed rule is not a major rule under Executive Order 12291, February 17, 1981. No regulatory impact analysis has been prepared.

Executive Order 12612, Federalism

This rule involves no policies that have federalism implications under Executive Order 12612, Federalism, dated October 26, 1987.

Executive Order 12778, Civil Justice Reform

This rule meets the applicable standards of section 2(b)(2) of Executive Order 12778.

List of Subjects in 44 CFR Part 65

Flood insurance, Floodplains, Reporting and recordkeeping requirements.

Accordingly, 44 CFR part 65 is amended to read as follows:

PART 65—[AMENDED]

1. The authority citation for part 65 continues to read as follows:

Authority: 42 U.S.C. 4001 *et seq.;* Reorganization Plan No. 3 of 1978, 3 CFR, 1978 Comp., p. 329; E.O. 12127, 44 FR 19367, 3 CFR, 1979 Comp., p. 376.

§ 65.4 [Amended]

2. The tables published under the authority of § 65.4 are amended as follows:

State and county	Location	Dates and name of newspaper where notice was published	Chief Executive Officer of community	Effective date of modification	Community No.
Arizona: Pima	Unincorporated Areas (Docket No. 7043).	Mar. 6, 1992 and Mar. 13, 1992, *Arizona Daily Star.*	The Honorable Reg Morrison, Chairman, Pima County Board of Supervisors, 130 West Congress Street, 11th Floor, Tucson, Arizona 85701.	Feb. 10, 1992	040073
California:					
Monterey	Unincorporated Areas (Docket No. 7043).	Mar. 5, 1992 and Mar. 12, 1992, *Salinas Californian.*	The Honorable Sam Karas, Chairman, Monterey County Board of Supervisors, 1200 Aguagito Road, Monterey, California 93940.	Feb. 21, 1992	060195
Napa	City of Calistoga (Docket No. 7043).	Mar. 19, 1992 and Mar. 26, 1992, *Weekly Calistogan.*	The Honorable Jim Hughes, Mayor, City of Calistoga, 1232 Washington Street, Calistoga, California 94515.	Feb. 26, 1992	060206
Riverside	City of Palm Springs (Docket No. 7043).	Feb. 27, 1992 and Mar. 5, 1992, *The Desert Sun.*	The Honorable Lloyd Maryanov, Mayor, City of Palm Springs, City Hall, P.O. Box 2743, Palm Springs, California 92263.	Feb. 14, 1992	060257
Sacramento	Unincorporated Areas (Docket No. 7043).	Mar. 31, 1992 and Apr. 7, 1992, *Sacramento Bee.*	Mr. Douglas M. Fraleigh, Director, Sacramento County Department of Public Works, 827 Seventh Street, Room 301, Sacramento, California 95814.	Mar. 19, 1992	060262
Santa Clara	City of Milpitas (Docket No. 7043).	Mar. 18, 1992 and Mar. 25, 1992, *Milpitas Post.*	The Honorable Peter McHugh, Mayor, City of Milpitas, 455 East Calaveras Boulevard, Milpitas, California 95035.	Mar. 9, 1992	060344
New York: Cattaraugus (FEMA Docket No. 7041).	Town of Allegany	Dec. 5, 1991 and Dec. 12, 1991, *Olean Times Herald.*	Mr. Daniel F. Eaton, Sr., Supervisor of the Town of Allegany, Town Hall, 52 West Main Street, Allegany, New York 14706.	Nov. 25, 1991	360061B
Ohio: Montgomery (Docket No. FEMA-7041).	City of Kettering	Feb. 14, 1992 and Feb. 21, 1992, *Daily News.*	The Honorable Richard Hartmann, Mayor, City of Kettering, 3600 Shroyer Road, Kettering, Ohio 45429.	Jan. 31, 1992	390412

(Catalog of Federal Domestic Assistance No. 83.100, "Flood Insurance.")

Issued: July 15, 1992.

C.M. "Bud" Schauerte,

Administrator, Federal Insurance Administration.

[FR Doc. 92-17379 Filed 7-23-92; 8:45 am]

BILLING CODE 6718-03-M

44 CFR Part 65

[Docket No. FEMA-7046]

Changes in Flood Elevation Determinations

AGENCY: Federal Insurance Administration, FEMA.

ACTION: Interim rule.

SUMMARY: This interim rule lists communities where modification of the base (100-year) flood elevations is appropriate because of new scientific or technical data. New flood insurance premium rates will be calculated from the modified base (100-year) flood elevations for new buildings and their contents.

DATES: These modified base flood elevations are currently in effect on the dates listed in the table and revise the Flood Insurance Rate Map(s) (FIRMs) in effect prior to this determination for each listed community.

From the date of the second publication of these changes in a newspaper of local circulation, any person has ninety (90) days in which to request through the community that the Administrator reconsider the changes. The modified elevations may be changed during the 90-day period.

ADDRESSES: The modified base flood elevations for each community are available for inspection at the office of the Chief Executive Officer of each community. The respective addresses are listed in the following table.

FOR FURTHER INFORMATION CONTACT: William R. Locke, Chief, Risk Studies Division, Federal Insurance Administration, 500 C Street, SW., Washington, DC 20472, (202) 646-2754.

SUPPLEMENTARY INFORMATION: The modified base (100-year) flood elevations are not listed for each community in this interim rule. However, the address of the Chief Executive Officer of the community where the modified base flood elevation determinations are available for inspection is provided.

Any request for reconsideration must be based upon knowledge of changed conditions, or upon new scientific or technical data.

The modifications are made pursuant to section 201 of the Flood Disaster Protection Act of 1973, 42 U.S.C. 4105, and are in accordance with the National Flood Insurance Act of 1968, 42 U.S.C. 4001 *et seq.*, and with 44 CFR part 65.

For rating purposes, the currently effective community number is shown and must be used for all new policies and renewals.

The modified base (100-year) flood elevations are the basis for the floodplain management measures that the community is required to either adopt or to show evidence of being already in effect in order to qualify or to remain qualified for participation in the National Flood Insurance Program.

These modified elevations, together with the floodplain management criteria required by 44 CFR 60.3, are the minimum that are required. They should not be construed to mean that the community must change any existing ordinances that are more stringent in their floodplain management requirements. The community may at any time enact stricter requirements of its own, or pursuant to policies established by other Federal, state or regional entities.

The changes in base flood elevations are in accordance with 44 CFR 65.4.

National Environmental Policy Act

This interim rule is categorically excluded from the requirements of 44 CFR part 10, Environmental Consideration. No environmental impact assessment has been prepared.

Regulatory Flexibility Act

This rule will not have a significant economic impact on a substantial number of small entities in accordance with the Regulatory Flexibility Act, 5 U.S.C. 601 et seq.

Regulatory Impact Analysis

This proposed rule is not a major rule under Executive Order 12291, February 17, 1981. No regulatory impact analysis has been prepared.

Executive Order 12612, Federalism

This interim rule involves no policies that have federalism implications under Executive Order 12612, Federalism, dated October 26, 1987.

Executive Order 12778, Civil Justice Reform

This interim rule meets the applicable standards of section 2(b)(2) of Executive Order 12778.

List of Subjects in 44 CFR Part 65

Flood insurance, Floodplains, Reporting and recordkeeping requirements.

Accordingly, 44 CFR part 65 is amended to read as follows:

PART 65—[AMENDED]

1. The authority citation for part 65 continues to read as follows:

Authority: 42 U.S.C. 4001 *et seq.*; Reorganization Plan No. 3 of 1978, 3 CFR, 1978 Comp., p. 329; E.O. 12127, 44 FR 19367, 3 CFR, 1979 Comp., p. 376.

§ 65.4 [Amended]

2. The tables published under the authority of § 65.4 are amended as follows:

State and county	Location	Dates and Name of newspaper where notice was published	Chief executive officer of community	Effective date of modification	Community No.
California, San Diego	City of San Diego	June 19, 1992, June 26, 1992, *San Diego Daily Transcript.*	The Honorable Maureen O'Conner, Mayor, City of San Diego, 202 "C" Street, 11th Floor, San Diego, California 92101.	June 23, 1992	060295
California, San Diego	Unincorporated areas	June 19, 1992, June 26, 1992, *San Diego Union Tribune.*	The Honorable George F. Bailey, Chairman, San Diego County, Board of Supervisors, 1600 Pacific Highway, Room 335, San Diego, California 92101.	June 12, 1992	060284

State and county	Location	Dates and Name of newspaper where notice was published	Chief executive officer of community	Effective date of modification	Community No.
Illinois, Cook	Village of Orland Park	June 24, 1992, July 1, 1992, *Orland Park Star.*	The Honorable Frederick T. Owens, Mayor of the Village of Orland Park, Cook County, 14700 South Ravinnia Avenue, Orland Park, Illinois 60462.	June 17, 1992	170140 D
Illinois, Cook and Will	Village of Tinley Park	June 24, 1992, July 1, 1992, *Tinley Park Star.*	The Honorable Edward J. Zabrocki, Mayor of the Village of Tinley Park, Cook and Will Counties, 16250 Oak Park Avenue, Tinley Park, Illinois 60477.	June 17, 1992	170169 E
Nevada, Washoe	Unincorporated areas	June 19, 1992, June 26, 1992, *Reno Gazette-Journal.*	The Honorable Gene McDowell, Chairman, Washoe County, Board of Commissioners, P.O. Box 11130, Reno, Nevada 89520.	June 10, 1992	320019
Tennessee, Shelby	City of Germantown	June 18, 1992, June 25, 1992, *Germantown News.*	The Honorable Charles Salvaggio, Mayor of the City of Germantown, 1930 Germantown Road, P.O. Box 38809, Germantown, Tennessee 38183-0809.	June 5, 1992	470353 C

(Catalog of Federal Domestic Assistance No. 83.100, "Flood Insurance")

Issued: July 15, 1992.

C.M. "Bud" Schauerte,

Administrator, Federal Insurance Administration.

[FR Doc. 92-17396 Filed 7-23-92; 8:45 am]

BILLING CODE 6718-03-M

DEPARTMENT OF TRANSPORTATION

National Highway Traffic Safety Administration

49 CFR Part 571

[Docket No. 87-02; Notice 6; 90-26; Notice 3]

RIN 2127-AD43; 2127-AD44

Federal Motor Vehicle Safety Standards; Seat Belt Assembly Anchorages

AGENCY: National Highway Traffic Safety Administration (NHTSA), DOT.

ACTION: Final rule; delay of effective date and response to petitions for reconsideration.

SUMMARY: In response to petitions for reconsideration, this final rule amends Standard No. 210 to clarify the location for measuring compliance with the anchorage location requirements, and to allow for other means of attaching the anchorage to the vehicle structure. In addition, this final rule extends the effective date for a number of recent amendments to Standard No. 210 one year. These amendments imposed significant new requirements which are still not clear to the vehicle and equipment manufacturers. This delay will allow sufficient time for the manufacturers to make any necessary changes in their vehicle designs to accommodate these new requirements.

DATES: The amendments made in this rule are effective September 1, 1993.

Any petitions for reconsideration must be received by NHTSA no later than August 24, 1992.

ADDRESSES: Any petitions for reconsideration should refer to the docket and notice numbers of this notice and be submitted to: Administrator, National Highway Traffic Safety Administration, 400 Seventh Street, SW., Washington, DC 20590. (Docket Room hours are 9:30 a.m.-4 p.m., Monday through Friday.).

FOR FURTHER INFORMATION CONTACT: Mr. Clarke B. Harper, Frontal Crash Protection Division, NRM-12, room 5320, National Highway Traffic Safety Administration, 400 Seventh Street, SW., Washington, DC 20590. Telephone: (202) 366-4916.

SUPPLEMENTARY INFORMATION:

Background

On April 30, 1990, the agency published a final rule amending several requirements of Federal motor vehicle safety standard No. 210, *Seat belt assembly anchorages*, (55 FR 17970). On December 4, 1991, the agency further amended Standard No. 210 in response to seven petitions for reconsideration of the April 1990 final rule (56 FR 63676). On the same day, the agency also published a final rule clarifying the definition of "anchorage" in Standard No. 210 (56 FR 63682).

As a result of these three final rules, the following amendments were made to Standard No. 210:

1. The definition of "seat belt anchorage" was amended to explicitly state that any vehicle part or component that transfers the load from a safety belt to the vehicle structure is part of the anchorage (effective 9/1/92).

2. The amendment to the definition of "seat belt anchorage" had the effect of requiring the attachment hardware to withstand the 3,000 pound forces during the strength test. While attachment hardware for manual safety belts is still affected, the attachment hardware for dynamically-tested and automatic safety belts was excluded (effective 9/1/92).

3. The minimum lap belt angle for front seats was increased from 20° to 30° (effective 9/1/92).

4. The minimum lap belt angle for rear seats was increased from 20° to 30° (effective 9/1/93).

5. Simultaneous testing of all anchorages common to a single occupant seat and of anchorages not common to the same occupant seat but within 12 inches of each other was required (effective 9/1/92).

6. The use of a narrower body block during strength testing was allowed as an option (effective 9/1/92).

7. Use of wire cable or strong webbing to restrain the body block during strength tests was allowed (effective 9/1/92).

8. The term "hip point" was substituted for the term "seating reference point" in the definition of "outboard designated seating position"

and for the location of the upper anchorage zone (effective 9/1/92).

9. All redundant anchorage requirements were removed (already in effect, as of 4/30/90).

The agency received four petitions for reconsideration of the two December 5, 1991 final rules. This notice responds to those petitions.

Issues

1. Definition

The December 5, 1991 final rule amending the definition of "seat belt anchorage" in Standard No. 210 was intended to make it clear that any vehicle part or component that transfers the load from a safety belt to the vehicle structure is part of the anchorage. The amended definition is:

"Seat belt anchorage" means any component, other than the webbing or straps, involved in transferring seat belt loads to the vehicle structure, including, but not limited to, the attachment hardware, seat frames, seat pedestals, the vehicle structure itself, and any part of the vehicle whose failure causes separation of the belt from the vehicle structure.

In the preamble to the final rule, the agency stated that "(t)he new definition gives examples of some of the components whose failure would result in non-compliance with Standard No. 210, without limiting the scope of the definition to those enumerated components."

Both Ford and Toyota petitioned that the definition of "seat belt anchorage" be amended by adding various components to either the list of inclusions or the list of exclusions in the definition. The agency already considered the option of listing many specific components and decided not to take that course of action. The agency believed that being too specific would undesirably restrict the definition. The agency continues to be hesitant to list specific components in the definition of anchorage, or conversely, to list components that are excluded from this definition, as the definition would then deal inadequately with designs not contemplated by the agency at the time of drafting the list. For this reason, the agency is not amending the definition of "seat belt anchorage" as requested.

In its petition, Ford has asked the whether the D-ring is part of the anchorage "(i)n seat belt assemblies where the D-ring is attached to the structure by a webbing strap." The webbing discussed in the final rule as being excluded from the definition of "seat belt anchorage" was the webbing that encompasses the occupant, not webbing used as attachment hardware. NHTSA believes that the attachment hardware should include all the equipment that attaches the safety belt to the vehicle structure. The safety belt system is tested in Standard No. 209, *Seat belt assemblies.* However, the D-ring and its attachment are not tested as part of the Standard No. 209 test. Therefore, the agency considers the D-ring to be part of the safety belt anchorage.

In another question regarding the definition, Toyota provided a sketch of a safety belt system which has a strap hooked directly to the anchorage bolt. For this design, the agency would consider it a failure of the Standard No. 210 test if the strap pulled away from the bolt. However, if the strap failed at the buckle, the agency would not consider the failure a non-compliance with the strength requirements of Standard No. 210.

2. Location Requirements

The only amendment to Standard No. 210 that was intended to affect the location requirements was the one increasing the minimum lap belt angle to 30 degrees.

Ford and Volkswagen stated that the upper anchorage location requirement in S4.3.2 was not clear. This section states that the upper anchorage must be within a specified zone. With the addition of attachment hardware to the definition of anchorage, Ford and Volkswagen stated that it is not clear what must remain within this zone.

NHTSA agrees with these petitioners. In amending Standard No. 210, the agency did not intend to change the stringency of the requirement for locating upper restraint anchorages. Before the addition of attachment hardware to the definition of anchorage, the determination of the upper anchorage's compliance with the location requirements was made with reference to the upper anchorage bolt hole. The agency believes that this reference is still appropriate for non-adjustable anchorages. Accordingly, NHTSA is amending S4.3.2 to state that the center of the anchorage bolt hole must be within the upper anchorage location zone.

Several additional location issues were raised by Ford and Volkswagen. First, Volkswagen requested that the location requirements not reference a bolt hole in case the vehicle manufacturer wishes to weld the safety belt attachment hardware to the vehicle, instead of using a bolt. NHTSA agrees with Volkswagen that reference to a bolt hole could be design restrictive. Therefore, the agency is amending S4.3.2 to require that either "the vertical centerline of the bolt holes, or, for designs using other means of attachment to the vehicle structure, at the centroid of such means" must be in the zone. This amendment will accommodate welding or other attachment techniques.

In accommodating welded anchorages, the agency wants to note that it and most of the automotive industry encourage replacement of the safety belt system after a moderate crash. Welding the safety belt attachment hardware may increase the difficulty of replacing safety belt systems. Therefore, despite its adoption of the amendment to permit other means of attaching the safety belt to the vehicle, the agency encourages manufacturers to design belt systems so as to facilitate replacement of those systems.

Second, Ford raised concerns about the location requirements for adjustable upper anchorages (AUA). The agency recognizes adjustable anchorages may be attached to the vehicle in multiple locations, a possibility which is not accommodated by the language of S4.3.2. To date, the agency has interpreted the location provisions as requiring that the bolts holding the adjustable anchorage must be in the upper anchorage zone. However, as stated earlier, the agency did not intend all of the attachment hardware for an AUA to remain in the zone. Accordingly, the agency is amending this final rule, as suggested by Ford in its petition for reconsideration, to require that the midpoint of the range of all adjustment positions remain within the required zone. This amendment will only affect rear outboard anchorages in vehicles equipped with automatic restraints and the front and rear outboard anchorages in the small number of vehicles with gross vehicle weight rating between 8,500 and 10,000 pounds. It will not affect the front outboard anchorages on all vehicles equipped with automatic restraints since those anchorages are excluded from the anchorage location requirements.

3. Dynamically Tested Safety Belts

The April 30, 1990 final rule extended the applicability of Standard No. 210 to the attachment hardware of a safety belt system. Responding to the petitions for reconsideration, the December 5, 1991 final rule excluded the attachment hardware for seat belt assemblies that meet the frontal crash protection requirements of S5.1 of Standard No. 208. The preamble noted that the agency does not consider a manual belt installed at a seating position that is also equipped with an air bag to be a

dynamically tested belt. It stated that the attachment hardware for these belts is therefore still subject to the Standard No. 210 strength tests.

Volkswagen petitioned the agency to reconsider its position that manual belts installed at a seating position equipped with an air bag are not dynamically tested. In the alternative, Volkswagen asked that manufacturers be given the option of dynamically testing these manual belt systems in lieu of Standard No. 209 and Standard No. 210 testing.

The agency believes that this issue has already received adequate review, and that the automotive industry has had sufficient opportunity to voice objection in previous rulemaking actions regarding this issue. No other petitions have been received on this issue. Further, no other petitioners asked to eliminate the existing static strength and attachment hardware tests. In addition, Volkswagen has provided no new data or information that would support its petition. Therefore, the agency has decided that this aspect of Volkswagen's petition for reconsideration should be denied.

Concerning Volkswagen's request that manufacturers be allowed to dynamically test safety belts in vehicles with airbags in lieu of required compliance with Standards No. 209 and 210, this is already an option. Manufacturers may select any reasonable basis for determining compliance with safety standard requirements. Therefore, if the manufacturer believes that a dynamic test would provide a sufficient basis for certifying compliance with aspects of Standards No. 209 and 210, a manufacturer may choose to determine compliance using a series of dynamic tests. However, the agency would determine compliance by means of the static tests specified by Standard No. 210.

4. Leadtime

The Ford petition stated that if the attachment hardware had to be located entirely within the anchorage zones, the location of some anchorages would have to be changed. This would require more time than the time remaining between now and September 1, 1992. As explained previously, it was not the intent of the agency to include all attachment hardware within the location requirements.

The agency has reviewed the changes in Standard No. 210 since the April 1990 final rule and the December 1991 final rules (effective September 1992 and September 1993). The agency imposed significant requirements in these amendments, such as the inclusion of attachment hardware in the strength test and the addition of testing more than one set of anchorages at the same time.

It is apparent that many significant issues are still not clear to the vehicle and equipment manufacturers. Not only has the agency received these four petitions for reconsideration within nine months of the effective date, but it also continues to receive informal inquiries concerning the definitions and the test requirements of these changes. Based on this experience, NHTSA believes it desirable to extend the effective date of these amendments until September 1, 1993. This delay applies to the following final rules: 55 FR 17970, April 30, 1990 (except for the amendment to S4.1.3 which was effective April 30, 1990); 55 FR 24240, June 15, 1990; 56 FR 63676, December 5, 1991; and, 56 FR 63682, December 5, 1991.

This final rule does not have any retroactive effect. Under section 103(d) of the National Traffic and Motor Vehicle Safety Act (Safety Act; 15 U.S.C. 1392(d)), whenever a Federal motor vehicle safety standard is in effect, a state may not adopt or maintain a safety standard applicable to the same aspect of performance which is not identical to the Federal standard, except to the extent that the state requirement imposes a higher level of performance and applies only to vehicles procured for the State's use. Section 105 of the Safety Act (15 U.S.C. 1394) sets forth a procedure for judicial review of final rules establishing, amending or revoking Federal motor vehicle safety standards. That section does not require submission of a petition for reconsideration or other administrative proceedings before parties may file suit in court.

Rulemaking Analysis and Notices

Executive Order 12291 (Federal Regulation) and DOT Regulatory Policies and Procedures

NHTSA has examined the impact of this final rule and determined that it is not major within the meaning of E.O. 12291 or significant within the meaning of the Department of Transportation's regulatory policies and procedures. The agency has also determined that the economic and other impacts of this rulemaking action are so minimal that a full regulatory evaluation is not required. The agency estimates the cost savings that would result from delaying the effective date to September 1, 1993 would be between $403,000 and $1,824,000. The actual value depends on which type of design would have been incorporated in school buses due to the requirements for simultaneous testing. This cost savings estimate reflects the range of annual costs originally estimated for simultaneous testing ($255,000–$1,676,000), plus a small ($148,000) savings estimated for those few vehicles that do not meet the 30 degree minimum lap belt angle requirement in the front seat. In most of the vehicles that would not meet the 30 degree requirement, the problem was in the rear seat. Since the effective date for the rear seat lap belt angle change is already September 1, 1993, and is not being extended further, there are no savings for these vehicles. These costs were discussed in greater detail in the April 30 final rule.

Regulatory Flexibility Act

NHTSA has also considered the impacts of this final rule under the Regulatory Flexibility Act. I hereby certify that it would not have a significant economic impact on a substantial number of small entities. As stated above, the agency does not expect any significant cost impact associated with this final rule.

National Environmental Policy Act

NHTSA has also analyzed this final rule for the purposes of the National Environmental Policy Act. The agency has determined that implementation of this action would not have any significant impact on the quality of the human ⅓environment.

Executive Order 12612 (Federalism)

Finally, NHTSA has analyzed this final rule in accordance with the principles and criteria contained in Executive Order 12612, and the agency has determined that this final rule does not have sufficient federalism implications to warrant the preparation of a Federalism Assessment.

List of Subjects in 49 CFR Part 571

Imports, Motor vehicle safety, Motor vehicles.

PART 571—FEDERAL MOTOR VEHICLE SAFETY STANDARDS

In consideration of the foregoing, 49 CFR part 571 is amended as follows:

1. The authority citation for part 571 of title 49 continues to read as follows:

Authority: 15 U.S.C. 1392, 1401, 1403, 1407, delegation of authority at 49 CFR 1.50.

§ 571.210 [Amended]

2. S4.3.1.4 of Standard No. 210 is revised to read as follows:

S4.3.1.4 Anchorages for an individual seat belt assembly shall be located at least 6.50 inches apart laterally, measured between the vertical

centerline of the bolt holes or, for designs using another means of attachment to the vehicle structure, between the centroid of such means.

3. S4.3.2 of Standard No. 210 is revised to read as follows:

S4.3.2 *Seat belt anchorages for the upper torso portion of Type 2 seat belt assemblies.* Adjust the seat to its full rearward and downward position and adjust the seat back to its most upright position. With the seat and seat back so positioned, as specified by subsection (a) or (b) of this section, the upper end of the upper torso restraint shall be located within the acceptable range shown in Figure 1, with reference to a two-dimensional drafting template described in SAE Recommended Practice J826 (May 1987). The template's "H" point shall be at the design "H" point of the seat for its full rearward and full downward position, as defined in SAE Recommended Practice J1100 (June 1984), and the template's torso line shall be at the same angle from the vertical as the seat back.

(a) For fixed anchorages, compliance with this section shall be determined at the vertical centerline of the bolt holes or, for designs using another means of attachment to the vehicle structure, at the centroid of such means.

(b) For adjustable anchorages, compliance with this section shall be determined at the midpoint of the range of all adjustment positions.

Issued on July 20, 1992.

Frederick H. Grubbe,

Deputy Administrator.

[FR Doc. 92-17437 Filed 7-23-92; 8:45 am]

BILLING CODE 4910-59-M

INTERSTATE COMMERCE COMMISSION

49 CFR Part 1057

[Ex Parte No. MC-203]

Petition To Amend Lease and Interchange of Vehicle Regulations

AGENCY: Interstate Commerce Commission.

ACTION: Final rule.

SUMMARY: The Commission has amended its written lease requirements by adding additional language to the Lease and Interchange of Vehicles regulations. The purpose of the amendment is to give notice to the courts and workers' compensation or other administrative tribunals who have ruled otherwise that, in requiring that a lease provide for the lessee's "exclusive possession, control, and use" of the equipment provided by the lessor, it is not the intention of the Commission's regulations to define or affect the relationship between a motor carrier lessee and an independent owner-operator lessor. A notice of proposed rulemaking was published in the **Federal Register** on January 22, 1992 at 57 FR 2512.

EFFECTIVE DATE: August 23, 1992.

FOR FURTHER INFORMATION CONTACT: Jessie Hodge, (202) 927-5302, or Richard Felder, (202) 927-5610. (TDD for hearing impaired: (202) 927-5721).

SUPPLEMENTARY INFORMATION: The Commission has amended the regulations dealing with written lease requirements at 49 CFR 1057.12(c), Exclusive possession and responsibilities, by inserting a new paragraph (4) confirming the Commission's view that the type of control required by the regulation does not affect "employment" status and that it is not the intention of the regulations to affect the relationship between a motor carrier lessee and the independent owner-operator lessor. Inclusion of a specific statement in the regulations was found to be necessary because certain State courts and administrative tribunals have determined that the regulations affect the relationship between the lessee and lessor.

Additional information is continued in the Commission's decision. To purchase a copy of the full decision, write to, call, or pick up in person from: Dynamic Concepts, Inc., room 2229, Interstate Commerce Commission, Washington, DC 20423. Telephone: (202) 289-4357/4359. [Assistance for the hearing impaired is available through TDD services (202) 927-5721.]

This action will not significantly affect either the quality of the human environment or the conservation of energy resources. This action will not have a significant economic impact upon a substantial number of small entities.

List of Subjects in 49 CFR Part 1057

Motor carriers, Reporting and recordkeeping requirements.

Decided: June 29, 1992.

By the Commission, Chairman Philbin, Vice Chairman McDonald, Commissioners Simmons, Phillips, and Emmett.

Sidney L. Strickland, Jr.,

Secretary.

For the reasons set forth in the preamble, title 49, chapter X, part 1057 of the Code of Federal Regulations is amended as follows:

PART 1057—LEASE AND INTERCHANGE OF VEHICLES

1. The authority citation for part 1057 continues to read as follows:

Authority: 49 U.S.C. 11107 and 10321; 5 U.S.C. 553.

2. In § 1057.12 a new paragraph (c)(4) is added to read as follows:

§ 1057.12 Written lease requirements.

* * * * *

(c) * * *

(4) Nothing in the provisions required by paragraph (c)(1) of this section is intended to affect whether the lessor or driver provided by the lessor is an independent contractor or an employee of the authorized carrier lessee. An independent contractor relationship may exist when a carrier lessee complies with 49 U.S.C. 11107 and attendant administrative requirements.

* * * * *

[FR Doc. 92-17519 Filed 7-23-92; 8:45 am]

BILLING CODE 7035-01-M

DEPARTMENT OF COMMERCE

National Oceanic and Atmospheric Administration

50 CFR Part 285

[Docket No. 920407-2519]

RIN 0648-AD01

Atlantic Tuna Fisheries; Bluefin Tuna

AGENCY: National Marine Fisheries Service (NMFS), NOAA, Commerce.

ACTION: Final rule.

SUMMARY: The Secretary of Commerce (Secretary) issues this final rule governing the Atlantic bluefin tuna (bluefin) fishery under authority of the Atlantic Tunas Convention Act (ATCA) to: (1) Reduce the total U.S. quota allocation by 10 percent for the 2-year period 1992 through 1993; (2) spread the reduction equally over the years 1992 and 1993, except for subcategories of fisheries that already have begun fishing in 1992; (3) apply the annual harvest amount among the categories, based on the average landings of each category during the period 1983 through 1991, adjusted for past catches (smaller than giants) sold by General category permit holders but attributed to the Angling category, and on improving scientific monitoring; (4) reduce the allowable catch of bluefin less than 115 cm (45 inches) to no more than 8 percent of the annual U.S. allocation; (5) prohibit sale of bluefin less than 178 cm (70 inches);

(6) implement area subquotas and differential bag limits in the Angling category for bluefin less than 115 cm (45 inches); (7) prohibit retention of young school bluefin (less than 66 cm (26 inches)); (8) implement a mechanism to subtract quota overages from, or add underages to, the appropriate category or subcategory if appropriate in following years; and (9) make other technical changes to enhance administration, management, and enforcement.

This action is necessary to implement the recently adopted recommendations of the International Commission for the Conservation of Atlantic Tunas (ICCAT) and to improve management of the bluefin tuna resource.

EFFECTIVE DATE: July 20, 1992.

ADDRESSES: Copies of the Environmental Assessment (EA) and the Final Regulatory Impact Review (FRIR) are available from Richard H. Schaefer, Director, Office of Fisheries Conservation and Management (F/CM), National Marine Fisheries Service (NMFS), 1335 East-West Highway, Silver Spring, MD 20910.

FOR FURTHER INFORMATION CONTACT: Richard B. Stone, 301-713-2347.

SUPPLEMENTARY INFORMATION:

Expanded Summary

The final rule bases the allocations among categories on a 10-percent reduction from the 1983-1991 average landings in the respective categories, with two adjustments, in order to minimize the economic impact on businesses dependent upon the bluefin tuna fishery. The final rule provides an opportunity for commercial fishing (the sale of fish) to exceed slightly a 10 percent reduction in the amount of fish sold historically. The average catch of bluefin sold by permitted fishermen between 1983 and 1991 was 1,128 metric tons (mt), a 10 percent reduction would provide 1,015 mt. Under the proposed rule, the potential catch available for sale would have been 979 mt (including the 85 mt reserve). Under the final rule, by allocating 54 mt of the reserve to the General category and releasing the 31 mt reserve, the potential catch for sale by permitted fishermen is 1,029 mt. This is shown in the following table:

Average catch sold [1] (1983-1991)	Catch available for sale [2]	
	Proposed rule	Final rule
1128	[3] 894-979	[4] 998-1029

(1) Average catch (mt) of bluefin sold by permitted fishermen.
(2) Catch available for sale by permitted fishermen.
(3) Potential catch available for sale (without reserve—with reserve for sale).
(4) Potential catch available for sale (with 54 mt of reserve in the General category—with remaining 31 mt reserve for sale).

The opportunity to catch small fish, i.e., less than 115 cm, is reduced by 75 percent by this final rule. The Angling category is affected more than the other categories by this rule and by the ICCAT recommendation that limits the allowable catch of bluefin less than 115 cm (45 inches) to no more than 8 percent of the total annual U.S. allocation. The Angling category is the only category that traditionally harvests and retains fish that small. The Angling category is also affected by the measure that prohibits sale of any fish less than 178 cm (70 inches), which will prevent unpermitted fishermen from selling bluefin tuna.

Background

On April 28, 1992, NMFS published a proposed rule at 57 FR 17872 to amend the regulations governing the Atlantic bluefin tuna fishery. Public comment on the proposed rule was invited through May 26, 1992. Comments received at a Congressional hearing on May 27, 1992, were also accepted.

The Atlantic bluefin tuna fishery is managed under the implementing regulations at 50 CFR part 285 under the authority of the Atlantic Tunas Convention Act, 16 U.S.C. 971 *et seq.* The ATCA authorizes the Secretary to promulgate regulations as may be necessary to carry out the recommendations of ICCAT. The authority to implement the ICCAT recommendations is delegated from the Secretary to NMFS. The Fishery Conservation Amendments of 1990 (FCA), Public Law 101-627, also authorize management of tunas under the Magnuson Fishery Conservation and Management Act (Magnuson Act). The Secretary is issuing regulations governing this fishery under the authority of the ATCA until such time as a fishery management plan is developed.

Background

ICCAT adopted several recommendations for additional measures to enhance recovery of the bluefin stock beginning with the 1992 fishing year. These measures include:

(1) That the Contracting Parties institute effective measures to limit the quota for the 2-year period 1992-1993 to 4,788 mt, but not to exceed 2,660 mt in the first year;

(2) That the 2-year quota be taken by the Contracting Parties in the same proportions as previously agreed to for 1990;

(3) That beginning with the 1992 catch, if a Contracting Party exceeds its annual or 2-year quota, then in the 2-year period or the year following reporting of that catch to ICCAT, the Contracting Party will compensate in total by reducing the quota of the domestic catch category responsible for the overage;

(4) That the three Contracting Parties will prohibit the taking and landing of bluefin weighing less than 30 kg, or in the alternative, having a fork length less than 115 cm, with discretion to grant tolerances of no more than 8 percent by weight of the total bluefin catch on a national basis; and

(5) that the Contracting Parties institute measures to preclude economic gain to fishermen from landing bluefin less than 30 kg, or in the alternative, 115 cm.

As a member of ICCAT, the United States is obligated to adopt domestic regulations to comply with these recommendations. During December 1991 and January 1992, NMFS held four scoping meetings to inform the public and initiate discussion of possible options to implement the ICCAT recommendations. A proposed rule was prepared, taking into account the comments received, and eight hearings and one informal meeting were held on this rule during April and May, 1992. All sectors of the fishery were represented at these meetings.

Management Measures

Spreading the Quota Reduction

In the proposed rule, NMFS selected a preferred option to reduce the total U.S. quota allocation by 10 percent for the 2-year period 1992 to 1993 to conform with the ICCAT recommendation and to spread the reduction equally over the years 1992 and 1993 (except for subcategories of fisheries that have already taken a substantial portion of their allocations in 1992). After review of comments received, NMFS has determined that this alternative, with some modifications, is the least disruptive to the participants in the U.S. fishery, in terms of shifts in jobs and economic impacts on coastal communities.

In § 285.22(h), NMFS had proposed an adjustment to quotas in 1993 if the total 1992 quota for U.S. fisheries is exceeded. In that event, overages in any category would have been deducted from the 1993 quota for that category. In the final rule, adjustments will be made in 1993 for any overage or underage in any category or subcategory, whether or not

the total U.S. quota is exceeded. The only proviso is that the total 1992 harvest plus the 1993 adjusted quotas and reserve cannot exceed the ICCAT recommended quota of 2,497 mt for the 1992–1993 period.

Allocation of Quota Reduction

The proposed rule based the allocations among categories on a 10-percent reduction from the 1983–1990 average landings in the respective categories. After the close of the comment period, NMFS reassessed this scheme and reconsidered the option favored by numerous commenters, which was to reduce the current quotas by 10 percent. NMFS has determined that its proposed scheme, with several modifications, is the most fair and equitable approach.

First, NMFS agrees with numerous commenters that the 1991 data should be included when calculating the average landings. Accordingly, NMFS has recalculated the quota based on the average landings from 1983 through 1991.

Second, NMFS recalculated the amount of bluefin smaller than giants landed and sold by vessels permitted in the General category, which had been previously counted against the Angling category because they were smaller than giants. NMFS has determined that it is more appropriate to count those fish against the General category quota, since they were harvested by vessels with General category permits. NMFS also intends to continue counting the landings in this manner.

Finally, the proposed rule contained a reserve amount of 85 mt, which may be allocated, in part or entirely, during the season to any category based on specified considerations, and to provide a buffer to help prevent the U.S. quota from being exceeded. This final rule provides for a reserve amount of only 31 mt, because NMFS believes it can manage the 2-year quota and thus does not need the full 85 mt reserve. NMFS will retain the flexibility to use the rest of the reserve as conditions in the fisheries warrant.

NMFS has selected a combination of measures, in conjunction with the harvest-based allocation scheme, intended to minimize disruptions in the fishery and to provide the best combination of catch and effort data for ICCAT assessment purposes. These actions are consistent with two of the stated objectives of the bluefin management regime.

NMFS believes allocation of the reduced quota cannot ignore the current state of the fishery and the economic reliance that has built up since 1983 in the angling sector. It is true that this sector of the fishery and its support industries would not have developed so substantially had NMFS been able to keep the Angling category within its quota over the last decade. The fishermen in this category and support industries violated no law—their economic dependence on the fishery must be considered.

A straight 10-percent reduction from current quotas would provide only 103 mt to the Angling category, which is affected more than the other categories by the ICCAT recommendation that limits the allowable catch of bluefin less than 115 cm (45 inches) to no more than 8 percent of the total annual U.S. allocation. The Angling category is the only category that traditionally harvests and retains fish that small. This rule will reduce the Angling category catch of small bluefin and could reduce the fishing mortality rate on these fish by over 50 percent from recent year averages. The Angling category is also affected by the measure that prohibits sale of any fish less than 178 cm (70 inches), the only fish that category may catch and retain. The combination of these measures would effectively prevent traditional Angling category fishermen from deriving income from the fishery, which could result in an economic loss to coastal communities. A quota of 219 mt, along with other brakes on fishing mortality, may allow the Angling category to stretch out its season through most of the summer, compensating anglers to some extent for the ICCAT mandated small-fish and no-sale measures and the more restrictive bag limits.

The purpose of the ICCAT quota is scientific monitoring. Since the large fish index is one of the most important indices used to tune the ICCAT bluefin tuna stock assessments, it is essential that these data be gathered over as long a season as possible. The General category catch and effort statistics (from rod and reel and handline gear) are the sole source of the large fish index. For this reason, 54 mt of the proposed reserve is added to the General category quota, where it will help keep the season open, thereby providing more catch, effort, and biological data over a longer period of time. Incidentally, the added tonnage will help mitigate the economic impacts of the reduced quota and no-sale provision.

The following table shows proposed quotas (in mt) and the steps (A 1, A 2, and A 3) taken to arrive at final quotas (A 3).

	Historical quota	Proposed quota	A 1	A 2	A 3
General	590	410	414	477	531
Harpoon	54	54	53	53	53
Purse seine	386	319	301	301	301
Angling	126	271	282	219	219
<115 cm	81	100		100	100
>115 cm	45	171		119	119
Incidental	137	111	113	113	113
Reserve	94	85	85	85	31

A 1 Proposed quota plus 1991 data.
A 2 Proposed quota plus 1991 data; adds to the General category the fish sold by General category permit holders and counted against the Angling category.
A 3 Final quotas. Modifies A 2 by adding part of the reserve to the General category to guard against early closure and assure as much data as possible for the important large fish index.

The following table gives a complete breakdown of the quotas, comparing the proposed and final rules:

Category	Proposed (mt)	Final (mt)	Category	Proposed (mt)	Final (mt)
General	410	531	Incidental:		
Area set-aside*	45	40	1992	137	137
Harpoon	54	53	South of 36°	104	104
Purse Seine	319	301	North of 36°	28	28
Angling	271	219	Other	5	5

Category	Proposed (mt)	Final (mt)
Years after 1992	83	89
South of 36°	61	67
North of 36°	17	18
Other	5	4
Reserve	85	31

*Historically used, if necessary, for late season General category catches of giants in the New York Bight.

Bluefin Less Than 115 cm

As ICCAT recommended, the rule reduces the allowable catch of bluefin less than 115 cm (45 inches) to no more than 8 percent of the annual U.S. allocation, or about 100 mt, which will be used in the Angling category only. Vessels in the Purse Seine category fishing for other tunas are allowed 1 percent per trip (by weight) incidental catch of bluefin less than 178 cm. Any landings of these incidental catches may not be sold and will be counted against the Purse Seine category quota.

Limitations on Sale

NMFS had proposed a ban on the sale of bluefin smaller than 196 cm (140 kg). We received many comments on mortality of bluefin slightly less than 196 cm that would occur in directed fisheries for giants. NMFS chooses 178 cm (about 235 pounds (107 kg)) as the lower limit for the sale of bluefin. This will allow landing and sale of an unavoidable bycatch of fish that could be mistaken at sea for giants. A limit of 235 pounds (107 kg) should protect all of the immature 6-year-old, and some of the immature 7-year-old, bluefin. This ban on sale of "small medium" bluefin will help further reduce the fishing mortality rate on pre-spawners and also reduce the incidental mortality associated with the directed giant bluefin fisheries.

Areas and Bag Limits

The proposed implementation of area subquotas and differential bag limits in the Angling category for bluefin less than 115 cm (45 inches) was retained, but modified. All vessels fishing in the Angling category are limited to one small medium bluefin per day. Private boats are allowed two school bluefin per trip. The bag limit for anglers remains the same (two per angler per day). Captains, mates, and crew of charter and party vessels may not harvest the angler limits. The prohibition on young school bluefin remains the same as in the proposed rule.

Vessels in the Harpoon Boat category are restricted to one large medium per day. These vessels may land an unlimited number of giants, so long as the allowable quota for the category is not exceeded. Vessels in the General category may take only one large medium or one giant per day. Purse seine vessels may land large mediums up to 10 percent of the total weight of giants on board.

Vessels permitted for the General and Incidental (rod and reel) categories may fish in the Angling category. If a large medium or giant tuna is caught by a vessel in the General category, it may be sold.

Other Changes from the Proposed Rule

The term "Regional Director" was proposed to be defined as the Director of the Office of Fisheries Conservation and Management (F/CM). In the final rule, the current definition of Regional Director is retained (Northeast Regional Director of NMFS, for Atlantic bluefin tuna) for all permitting and monitoring functions, while "Director" is used for the Office Director of F/CM.

In § 285.3, the prohibition in paragraph (f) against landing tuna with the head removed is revised to reinstate the requirement to land tuna in the round with fins intact, but to allow the fish to be gutted and the head removed. The prohibition proposed at § 285.31(a)(37) has been moved to § 285.3(h) and made applicable to all Atlantic tuna fisheries.

In the final rule, terms for new size classes of medium fish are added. The new size classes are defined and presented in the table at § 285.26. The "large medium" class defines fish smaller than giants that may be sold (178 to <196 cm).

In § 285.23(c)(1), the world "fishing" is added before "trip" because "fishing trip" is a defined term (at § 285.2). The word "caught" is substituted for "landed" to ensure that tuna landed from a longline vessel are actually an incidental catch.

Authority for the Assistant Administrator to adjust the daily catch limit in the General category from one to three giant bluefin is reinstated in § 285.24(a). Authority for adjustment of the bag limit for anglers on party and charter boats (from one to two school bluefin and back to one) is added at § 285.24(c)(2).

The prohibition at § 285.31(a)(10) is revised by adding the phrases "(fins intact)" and "eviscerated".

Comments and Responses

NMFS received numerous comments at the hearings and written comments submitted during the comment period on the proposed rule, many of which were adopted in the final rule and others that will be considered in future rulemakings. NMFS considered all comments received during the comment period while formulating this final rule. Specific comments are discussed and responded to below.

Almost 300 oral and slightly over 200 written comments (not counting petitions) were received. Comments presented orally during the public hearings and written comments received during the comment period are summarized below. To assist the reader, where appropriate, the specific measures of the proposed rule are repeated verbatim in the same order as they appeared in the proposed rule. Some are not implemented by this final rule.

1. Reduce the Total U.S. Quota Allocation by 10 Percent for the 2-Year Period 1992 Through 1993

Comment: Many commenters supported the 10-percent reduction in the U.S. allocation for the 2-year period because it is a step in the right direction and because it supports ICCAT's efforts. Other commenters, opposing the reduction, alleged the scientific data and, therefore, projections of stock decline, are inaccurate. Others opposed the measure because it does not reduce fishing mortality sufficiently to rebuild the stock or reduce the probability of stock failure. Many of these commenters suggested a 50-percent reduction, an additional 10-percent reduction, or restrictions on trade under the Convention on International Trade in Endangered Species (CITES).

Response: Under the ATCA, the United States is obligated to implement recommendations adopted by ICCAT and is prevented from implementing regulations that have the effect of increasing or decreasing a recommended quota. This measure was adopted by ICCAT during the November, 1991, meeting, based on the advice of the Standing Committee on Research and Statistics (SCRS) and the views expressed by member countries. Failure to implement this measure would be inconsistent with U.S. law. Therefore, no change has been made in the final rule.

2. Spread the Reduction Equally Over the Years 1992 and 1993, Except for Subcategories of Fisheries That Have Begun Fishing Already in 1992

Comment: Several commenters objected to the proposal to spread the reduction equally over the 2-year period because they believed it contrary to recent amendments to the Magnuson Act and the ATCA. They contended that no reduction should be made in 1992, and the entire reduction applied in 1993.

This, they believed, would preserve the chance that reductions in fishing mortality would be achieved due to natural environmental causes, making mandatory reductions unnecessary. Others suggested the United States should implement the 2-year reduction in the same manner as Canada and Japan. Some commenters supported the spreading of the reduction as proposed.

Response: NMFS believes that dividing the reduction equally over the 2-year period, with some exception for categories well into their fishing season before this rule is implemented, is the least disruptive and most equitable to the resource users. Although "natural reductions" may occur, they are unlikely to occur in proportion to the subquota allocations or in sufficient amounts to effect the 2-year reduction that is required by the ICCAT recommendation. Instead, this rule credits quota overages or underages to the next year's allocation on a category-by-category basis. This will ensure the integrity of each category's allocation over the 2-year period. NMFS disagrees that this approach is contrary to the Magnuson Act or the ATCA. Further, it is not possible to implement the reduction in the same manner as both Canada and Japan; Canada has indicated it will implement the entire reduction in 1993 and Japan has indicated it is implementing two annual reductions in the same manner as the U.S.

3. Apply the Annual Harvest Amount Among the Categories Based on the Average Landings of Each Category During the Period 1983 to 1990

Comment: As discussed above, most commenters opposed the allocation among the permit categories based on average historical catch, although many seemed to object more to the results than to the calculation method. Many commenters believed the allocation would encourage fishing on mediums and generally result in shifting effort onto small fish, contrary to sound management principles. Other commenters expressed the view that spawning fish should be protected because they are essential to producing good recruitment. Some commenters contended that using historical averages to determine quotas is unfair to those who did not exceed the quota and rewards past overages at the expense of the categories that operate under more restrictions and enforcement coverage. They considered the effect on the General category to be overly restrictive and likely to shorten the season and that a disproportionate share of the burden of conservation is being imposed on this category. They cited the 31-percent, rather than 10-percent, reduction to support their point. They believed cuts should be across-the-board, based on quotas; the same percentage applied to each subquota category. Other comments in support of this view were:

(1) The Northeast needs a large allocation of giants; mediums and small fish are less available there.

(2) Harvesting giant bluefin, versus smaller fish, increases the value.

(3) Commercial effort should be directed immediately away from smaller mediums. Only restricted commercial access should be provided to valuable "large medium" bluefin.

(4) NMFS should reduce fishing mortality of medium bluefin by precluding smaller mediums from being landed by General and Harpoon Boat category permit holders.

(5) NMFS should use scientific modelling to determine the effectiveness of this proposal.

(6) One giant equals many school fish in weight—therefore there is less total mortality associated with catching giants.

(7) The General category provided the best data; NMFS should increase the General category quota to provide better scientific monitoring.

(8) NMFS should emphasize harpoon and handline gear since they target only large fish.

(9) Increasing the Angling category is based solely on economics and not on (biological) science.

(10) Conversation should be based on the numbers of fish killed, not the weight.

(11) NMFS should not increase overall mortality.

(12) The allocation system in the proposed rule rewards past gross discards of small fish.

(13) Illegal landings are included in the historical averages.

(14) NMFS should not implement the reduction in a manner that reduces the ability of U.S. fishermen to achieve the available quota.

Many did not object to the basis for the reallocation, provided that adjustments were made, such as crediting the General category with catches of medium fish sold and including the most recent year's (1991) catch. Some stated that all medium bluefin should be allocated to the General category. One mistakenly believed that medium bluefin have historically counted against the General category and thought this should continue.

Response: NMFS believes it is reasonable, appropriate, and consistent with the four objectives stated in the proposed rule and Environmental Assessment (EA) to distribute allocations based on recent performance in the fishery rather than the on quotas set almost a decade ago, which have proven inappropriate in some cases, and which no longer represent the present-day economic and social situations. NMFS has agreed with and accommodated many of the points raised during the comment period. For instance, preliminary 1991 catch data have been incorporated; an allowance has been made for sale of large medium fish, which are more valuable commercially, while smaller medium fish remain protected by the no-sale provision. NMFS has responded to commenters' concerns that historical landings by vessels permitted in the General category were incorrectly attributed to the Angling category. Accordingly, these landings have now been credited to the General category. NMFS has also responded to the concern that the General category fishery, which provides important scientific information and supports a great number of users, is being unduly restricted. NMFS has addressed this concern by allocating some of the historical reserve up-front to the General category. This also is consistent with past practice to use the reserve in fisheries that provide useful scientific information. Nothing in the final rule would preclude fishermen from taking the available quota.

Comment: Many commenters provided alternative allocation methods such as:

(1) Eliminating the Purse Seine category;

(2) Allocating to each category based on the number of jobs;

(3) Giving the Inseason adjustment amount (reserve) to the Angling category and nothing else;

(4) Placing charter boats in a separate category; and

(5) Combining the Angling and General categories.

Response: NMFS has not allocated according to these suggestions for several reasons. First, the impacts of some of these alternatives, which could be substantial to a particular category, were not explored prior to or during the proposed rule, and, as such, did not receive sufficient public review. Elimination of one or more of the categories would be inconsistent with the objective to minimize displacement and preserve traditional fisheries. NMFS believes the reasons why the charter boat category was eliminated in the early 1980s are still valid.

Comment: Some commenters questioned whether NMFS has the authority to change the allocations under the ATCA and claimed that NMFS should have followed the Magnuson Act process.

Response: The ICCAT requirement for 10 percent reduction meant that NMFS had to change allocations from what they had been in the past. The authority to promulgate regulations appropriate and necessary to carry out the recommendations of ICCAT is granted by the ATCA and NMFS followed the full process required. This broad authority enables the Assistant Administrator, who has been delegated the responsibility within the Department of Commerce, to determine what is necessary to implement the recommendations. This authority has been recognized by the courts (see *Tri-Coastal Seafood Coop.* v. *Richardson*, No. 76–2316–G, CD. Mass. Hearing transcript June 23, 1976).

Comment: One commenter questioned whether the purse seine and Gulf of Mexico incidental fisheries are contrary to NMFS' own objective to "maximize use and spread the resource to as many users as possible."

Response: Elimination of any of the domestic categories was not an option in the proposed rule and is not implemented in this final rule.

Comment: Some commenters focused on the Incidental category by pointing out that reducing incidental quotas only results in increasing discards, that the longline quota should be adjusted to reflect current participation, and that the Incidental category is being hurt economically by this rule. One commenter requested a detailed explanation of how incidental reductions were calculated and believed that the "Incidental category for miscellaneous 'Other' gears should receive its historical catch of less than 1 mt."

Response: NMFS recognizes the constraints on the Incidental categories but does not believe these allocations require further adjustments beyond the scheme based on historical catch, with one exception for miscellaneous gear. This rule should not impose more than minimal economic hardship to this category and may actually improve conditions in the northern area of the Incidental longline category by correcting the practice of subtracting southern area overages from the total longline quota. Instead, overages will be subtracted in the following year from the category, or subcategory if appropriate, responsible for the overharvest. NMFS does not agree that the Incidental category for miscellaneous catches should be reduced to less than 1 mt, because that amount would roughly equate to four fish. NMFS has set this allocation at 4 mt, which should prove sufficient.

Comment: A great many commenters indicated that NMFS was showing bias for or against a particular category or sector of the fishery. Comments to that effect were:

(1) NMFS should send an unbiased representative to the public hearings.

(2) The proposal was a ploy to eliminate commercial fishermen.

(3) The current quota system was working—do not change it.

(4) NMFS is trying to put the different categories against each other and favors recreational over commercial interests.

(5) NMFS "portrayed" the reduction as a 10-percent across-the-board cut.

(6) The proposed allocations are to make up for NMFS's inability to control other categories.

(7) The proposal allocated arbitrarily from New England to the Mid-Atlantic region.

(8) NMFS is being deceptive, and is "turning" on people that make the fishery work.

Response: NMFS believes the final rule has been responsive to a wide range of views and comments; more detailed explanations for actions taken in this rule are explained in responses to other comments.

4. Reduce the Allowable Catch of Bluefin Less Than 115 cm to no More Than 8 Percent of the Annual U.S. Quota

Comment: While many commenters supported the proposed rule, there were also numerous commenters who opposed it. In general, the primary opposition came from mid-Atlantic commenters who claimed that fish of this size are just about all that are found in the area, and that such a drastic measure would cause undue economic hardship because of a loss of fishing trips/charters that sportsmen made. Many commenters claimed that this economic hardship would have a "ripple effect" throughout the region as businesses associated with this industry (marinas, hotels, tackle shops, etc.) felt the effect of the decline in recreational fishing. The primary support for this rule came from north Atlantic commenters who claimed this measure was necessary to protect future spawning stock. Following are specific comments received in opposition:

(1) The measure is insupportable when there is such a high fishing rate on giants.

(2) The proposal would put people out of business.

(3) NMFS should allow retention of these fish in the Angling category.

(4) The 8-percent limit for fish less than 115 cm should be on the total harvest, not by country.

Response: Each of these comments is beyond the scope of this rulemaking. ICCAT has mandated that there be no landings of bluefin less than 115 cm. ICCAT also provided discretion that a country may allow a tolerance of no more than 8 percent of its national quota. Under the ATCA, the United States is obligated to implement recommendations adopted by ICCAT. This measure was adopted during the November, 1991, meeting, based on the advice of the Standing Committee on Research and Statistics (SCRS) and the views expressed by ICCAT member countries. Failure to implement the limitation would be inconsistent with U.S. law; NMFS has minimized the impacts to the extent possible by providing the 8-percent tolerance and establishing two subquotas for school bluefin.

Comment: One commenter stated that purse seiners need some incidental allowance for the take of bluefin less than 115 cm while fishing for skipjack; fishermen cannot guarantee that some small bluefin will not mix with skipjack.

Response: NMFS agrees with this comment and has added a provision to the Incidental catch section to accommodate this. Vessels in the Purse Seine category fishing for other tuna species will be allowed a 1 percent-per-trip (by weight) incidental take of bluefin less than 178 cm. Any landings of these incidental catches may not be sold, but will be counted against the Purse Seine category quota.

5. Prohibit Sale of Bluefin Less Than 196 cm (77 Inches)

Comment: As with most of the major provisions of the proposed rule, NMFS received many comments on this proposal. Many commenters were concerned with the potential waste of medium fish that would be caught and so exhausted by the struggle (or wounded by a harpoon) that many would die. Other comments pointed out the difficulty of distinguishing the size of a fish while it is in the water. Most General category fishermen and some charter boat fishermen opposed the ban on sale of medium and smaller fish. Some comments addressed the age at which spawning first occurs, where spawning occurs, and using the spawning size as the no-sale cut off. Summaries of specific comments received in opposition follow:

(1) NMFS should allow two mediums per General category boat.

(2) The proposed regulations ignore the working class; there is profit in catching and selling mediums.

(3) There is a large mortality on released mediums; it is hard to tell the difference between large mediums and small giants, resulting in a waste of fish.

(4) The provision against sale of mediums and large school fish goes beyond the ICCAT recommendations, is unique to U.S. fishermen, and may be illegal.

(5) Some fishermen questioned the rationale behind the proposal—many fish would be sold illegally, especially if enforcement is lacking.

(6) Sport fishermen probably cannot boat and tag a medium without high mortality because they lack the technique to quickly boat a medium.

(7) The ban on sale of mediums would wipe out the Cape Cod fishery.

(8) Mediums are often sold.

(9) The size categories should be redefined.

(10) If sport anglers cannot sell, then they will kill just for sport.

(11) People could be injured trying to measure a bluefin while the fish is in the water.

(12) NMFS should reduce the size limit to 60 inches and fishermen can tell the difference.

(13) NMFS should set the no-sale limit at 65 inches and allow one medium to be caught by commercial fishermen.

(14) NMFS should set the no-sale limit at 66 inches—this would protect some 6-year old fish. Age 6 is the earliest age at which 50 percent of the female cohort could reach sexual maturity.

(15) NMFS should set the no-sale limit at 68 inches (220 pounds).

(16) NMFS should set a 70-inch cut-off to prevent waste.

(17) NMFS should prohibit retention of fish less than 68 inches in the General and Harpoon Boat categories.

(18) The sale of fish is important to charter boats.

(19) Recreational fisherman sell large school and medium fish; recreational fishermen should be allowed to sell fish.

(20) Fishermen need to sell medium fish to offset fuel costs.

(21) Purse seiners should not be allowed an incidental take of mediums.

A few commenters supported the proposed ban on sale as a good conservation measure. Specific comments were:

(1) The proposal is absolutely necessary—it makes sense to reduce the kill of fish nearing breeding age.

(2) No sale below 77 inches would be acceptable with a one medium fish allowance.

Response: NMFS agrees, in part, with those who opposed the ban on sale of tuna less than 77 inches (196 cm) and is revising the final regulations to prohibit sale of tuna less than 70 inches (178 cm). NMFS is concerned with the potential waste of tuna. On the other hand, NMFS is very concerned about the high level of fishing mortality on medium bluefin tuna and continues to believe that giant tuna of 77 inches (196 cm) or more should remain the target for directed fisheries and commercial sale. Eliminating tuna below 70 inches (178 cm) from the commercial fishery—even though ICCAT recommendations allow commercial harvest to 45 inches (115 cm)—will reduce the incentive to harvest these fish and also help reduce the fishing mortality rate on these immature bluefin tuna that are about to enter the very low spawning stock biomass. There has not been a good year class since the early 1970's; rebuilding the spawning stock biomass may be crucial to enhance spawning potential. Also, from an economic and biological standpoint, the smaller the fish, the less the fish is worth per pound and the greater the probability that the fish can be released alive. Thus, future commercial value may be enhanced.

The problem of judging the size of the fish while in the water is almost impossible to solve. NMFS looked at catch data and data on fish sold to determine if there are any natural breaks in size distribution of fish landed that would be an appropriate cut off to help reduce incidental take of medium bluefin. The size distribution for fish sold in 1990 and 1991 showed that there were some size ranges in which substantially fewer fish were landed (between 211 and 250 pounds (96 and 113 kg)). Any cut-off means fish just below the minimum size will be caught and released, with some mortality. This allowance for sale of bluefin tuna between 178 cm and 196 cm is to provide a margin of error for commercial fishermen who pursue giants. The scientific rationale for no-sale, to reduce the fishing mortality rate on immature bluefin and rebuild the spawning stock biomass, has not changed. Information from scientists (see comments below on a paper by Baglin) support the break between immature bluefin and spawners at about 196 cm, with the smallest size for possible first spawning at 190 cm.

The short-term economic impact of reducing the size limit pertaining to the ban of sale is difficult to predict. The general effect is to increase the probability of reaching the quota—thus shortening the season. To the extent that the quota is filled with fish worth less per pound, revenues will decrease. But, to the extent that fishermen can keep a fish that otherwise would be released, the costs of fishing also decrease. On balance, NMFS judges that the change from the proposed rule will be positive, especially because of the allowance for large mediums in the giant fisheries and the potential reduction in the fishing mortality rate on immature bluefin tuna because of the no-sale provision of fish less than 178 cm. Large medium bluefin tuna caught incidentally that otherwise would be "dumped" will now count against the quota. Bluefin less than 178 cm will not be targets of commercial fishermen, thus there will exist a potential for reduction in fishing mortality relative to the average commercial catch of these fish sizes in previous years.

One commenter suggested applying a biological criterion for establishing an acceptable minimum size for sale of bluefin. Specifically, the commenter suggested using the median size (age) at first reproduction as an acceptable minimum size. Applying a minimum size that effectively restricts harvest of fish smaller than the median size of first reproduction has the desirable effect of providing enhanced probability of a fish reaching spawning size, and thus can contribute to conservation of the resource. Although this criterion might be supported from a resource conservation perspective, it is not apparent that the specific minimum size recommended by the commenter is supported by available data.

The comment referenced Baglin (1980) in support of the statement, "Age six is the earliest age at which 50 percent of the female cohort could reach sexual maturity." Although a complete citation was not given, the appropriate reference is more likely Baglin (1982, Reproductive biology of western Atlantic bluefin tuna. Fish. Bull., U.S. 80:121–133), in which Baglin states, "My analysis of western Atlantic bluefin tuna ovaries indicates that age 6 would probably be the earliest age at which a majority of females could *possibly* reach maturity" (emphasis added). Although the cited author acknowledges this possibility, he also states that the available observations suggest that it is unlikely that fish of a size corresponding to age 6 contribute to the spawning success of western Atlantic bluefin.

The size frequency observations from fisheries operating in the region suggest that medium-sized fish are generally not available in the Gulf of Mexico. Given the available data, the apparent minimum size of first reproduction (which may be smaller than the median

size at first reproduction) may be better approximated by the smallest female from the known spawning grounds histologically examined by Baglin. Baglin's table 3 suggests that this minimum might be as small as 190 cm (74.8 inches) snout to fork length (SFL).

6. Angling Category Subquotas, Differential Bag Limits, Captain and Mate Exclusion, Further Protection of Small Fish

A variety of comments were received on these issues. Individual or similar comments are responded to as follows.

Comment: NMFS should increase the angler bag limit to 3 to counteract the new size restriction.

Response: NMFS disagrees. The purpose of the bag limit is to slow the fishery so that many anglers have an opportunity to catch bluefin. Lengthening the season will provide some assistance to the charter and party boats and other support industries involved in the bluefin fishery.

Comment: The bag limit should be 2 school bluefin per person per day or one large school bluefin per day.

Response: NMFS disagrees. The ICCAT-mandated quota for school bluefin is the most restrictive aspect of the regulations. Raising the school fish quota would shorten the season even further. The option suggested of "or one large school" would result in waste if the first fish landed was a school fish.

Comment: NMFS should stop the commercial charter boat fishery by limiting the number of fish per boat.

Response: NMFS disagrees. The regulations attempt to distribute a limited number of fish equitably. NMFS has no desire to exclude any sector of the existing fishery.

Comment: The limit of one school bluefin per person is not realistic; revisit the young school limit.

Response: NMFS disagrees. Given the limited total national quota of school fish (100 mt), one school bluefin per person per day is not unreasonable. As discussed above, NMFS is trying to spread a small quota as much as possible.

Comment: NMFS should reduce medium limits to one per boat per day. NMFS should establish bag limits of two mediums per boat per day. Two mediums for anglers is excessive; the limit should be one per day.

Response: NMFS agrees with a daily limit of one medium. One medium bluefin, when dressed, could easily weigh 120 pounds (54 kg). Six anglers sharing one medium bluefin will have several meals for average sized families and some left over to give to friends. Tag and release fishing is available to provide the fishing experience, would contribute to bluefin scientific studies, and make the angler tagging or recapturing a bluefin eligible for a reward as well as contributing to conservation of the resource.

Comment: Private boats have expenses similar to charter boats and need more than one school fish per day. Private boats have to travel distances off shore similar to charter boats and would be allowed to keep only one fish.

Response: NMFS recognizes that one school fish per day in some areas is restrictive. The final regulations allow two school fish per private boat per day.

Comment: How will captains and mates be treated in the Angling category? Are they counted in the bag limits? Captains, mates, and crew should not be counted as anglers.

Response: NMFS did not intend in its proposed regulations to leave a loophole whereby captains, mates, and crew would be considered anglers. Although most captains and mates would not fish, "extra" fish removed from the charter boat by the captain, mate, and crew and given later to the passenger, would, in effect, allow an angler more fish per day than intended. The final regulations clarify that captains, mates, and crew are not anglers for purposes of determining the total number of bluefin that a charter or party boat can land.

Comment: Fish in the 100–300 lb (45–136 kg) range need the most protection and catches in that range should be cut by 50 percent.

Response: NMFS agrees that this range does need more protection. The ban on sale of small mediums plus the lower bag limits are intended to lower mortality in this range, although the reduction will probably not be 50 percent.

Comment: NMFS should protect the recruits because they are the future spawners. Fishing should be allowed only on large fish.

Response: NMFS realizes that recruits represent future spawners and that large medium and giant fish are spawners. Measures in this rule, however, are intended to reduce fishing mortality on all age classes of bluefin.

Comment: There is a need to clarify and reword the daily limits for charter and party boats.

Response: NMFS agrees. Wording of the proposed regulations was difficult to understand. The text has been clarified and, as an aid to the reader, the following table explaining the bag limits has been prepared.

BAG AND BOAT LIMITS

Size	Party—charter boats	Private boats
Young School	None	None.
School	1/Angler/Day	2/boat/day
Large School	2/angler/day *	2/angler/day *
Small Medium	1/boat/day	1/boat/day
Large Medium and Giant.	1/boat/day **	1/boat/day **.

* The basic catch limit of two fish per angler per day cannot be exceeded, i.e. two large school bluefin only if no school or no small medium bluefin are caught.

** Vessels must have a permit.

In the Angling category, captains, mates, and crew of charter and party boats are not allowed to fish under the bag limits. There is no sale of school, large school, and small medium bluefin.

Comment: There is no need for differential limits—the proposed rule contains no statistical data to support differential bag limits. This proposal should not become a precedent-setting distribution basis.

Response: NMFS disagrees. Private boats and charter boats both provide anglers with a fishing experience. In addition, charter boats represent employment for the captain and the mate. To protect jobs, NMFS judges that the differential is warranted. Given available information, it is apparent that even with restrictive bag limits to control the landed catch of these fish to allowable levels, closure of the fishery may still be required. Although there is some chance that the fishery will not reflect the bag-limit analysis (based on prior year information) and landed catch might not exceed the allowable levels under the final catch limits, NMFS has no analysis available that indicates the likelihood of these outcomes. The likelihood of closure cannot be ruled out under more restrictive bag limits; however, the expected season length under more restrictive bag-limit scenarios would likely be longer than under the limits chosen.

Comment: Some fishermen would not pay a $200 charter fee for only two tuna.

Response: NMFS realizes that some anglers may choose alternatives to fishing from a charter boat under the new restrictions. The extent of the shift, if any, is unknown. The basic angler bag limit is unchanged in the final regulations. Charter boat owners, we anticipate, should benefit from a longer season.

Comment: NMFS should allow the charter and party boat group to sell up to three giant fish per week.

Response: The change in the final regulations that allows fishing in both the General category and the Angling category will allow charter and party boats to land one giant per day

provided the vessel has a General category permit.

Comment: All party and charter boats should be allowed to sell medium fish if the General category is allowed to sell medium fish.

Response: Anyone with a General permit, including charter and party boat captains, may sell the newly-defined "large medium" fish. No one may sell bluefin smaller than a large medium.

7. Prohibit Retention of Young School Bluefin (Less Than 66 cm, 26 Inches)

Comment: Almost all commenters agreed in principle with the measure precluding the retention of bluefin less than 26 inches (66 cm). Some believed the retention limit should be raised, e.g., to 45 inches (115 cm) or 66 inches (168 cm) to increase conservation benefits.

Response: The 26 inch (66 cm) size limit is based on a size limit imposed by ICCAT for the eastern and western Atlantic bluefin tuna fisheries. NMFS does not believe that the minimum size for retention should be raised further in consideration of the other restrictions imposed by this rule.

8. Preclude Vessels Permitted for Other Categories From Fishing in the Angling Category and Angling Category Vessels From Fishing in Other Categories

Comment: Most commenters opposed the proposed regulation. Those most in opposition were charter boat owners who fish commercially when they do not have passengers. The proposed measure would have forced this group to choose between two alternative occupations. Other comments included:

(1) Mediums should not be sold out of commercial categories (i.e., in the Angling category).

(2) The proposal is unenforceable.

(3) The proposal will result in a high release mortality.

(4) General category vessels will be precluded from landing mediums. This is another form of reallocation to the mid-Atlantic.

(5) NMFS should count mediums against the General category.

(6) Fishermen will need to turn in their permits. The $20 fee should be refunded to everyone.

(7) With the proposed rule changes, some fishermen will not know which category to choose.

(8) What is meant by "no economic gain?"

(9) Will traditionally recreational boats be required to outfit as commercial boats with safety gear if they retain a General category permit under these proposed regulations?

Some supported the proposal, advocating a greater separation between the commercial and the recreational categories.

Response: NMFS is convinced by the arguments of those who opposed the proposed measure and has not included a "one category" provision in the final regulations. The economic consequences to that unknown number of individuals who are involved full time in the fishery—partially as a charter boat captain and partially as a commercial fisherman—could be severe. The proposed measure would have been unfair to those who recently renewed permits but had a low expectation of catching a large medium or giant bluefin and would have had to turn in the permit to fish recreationally for smaller fish. The regulation would not have been unenforceable, but would have been difficult to enforce. Individuals might have been motivated to claim they had never received their permit if they landed smaller fish. However, allowing individuals to fish in both the General and Angling categories will have the effect that the quotas in those two categories will be reached sooner. There will not be a separation between the two categories, but there will be no sales by General category fishermen recorded against the Angling category. "No economic gain" in the ICCAT recommendation has been interpreted by NMFS to mean no sale of school fish. Questions concerning safety gear on vessels should be directed to the U.S. Coast Guard.

9. Implement a Mechanism to Subtract Quota Overages From the Appropriate Category in Following Years if the United States Exceeds its Allocation

Comment: Many commenters supported the concept of subtracting overages from the category responsible for the overage. Some commenters objected to the mechanism and suggested that this occur only in the case of the United States exceeding its national allocation. Many commenters stated also that underharvested amounts should be credited in the following year to the categories that were under quota. One commenter stated that a category that blatantly overfishes its quota should be closed permanently.

Response: NMFS generally agrees with the commenters, excepting the comment regarding permanent category closure, and has implemented a mechanism to credit suballocation overages and underages by category or sub-category during the 2-year period. As explained above, the proposed measure has been modified to provide that adjustments will be made in 1993 for any overage or underage in any category or sub-category, whether or not the national quota is exceeded. NMFS maintains that this is consistent with the intent of ICCAT to provide that the full 2-year amount be available for harvest.

10. Eliminate the Adjustment to Multiple Catches Per Day in the General Category

Comment: Most commenters favored restoring the Office Director's flexibility to raise the daily catch limit in the General category to as many as three fish. Some comments were:

(1) NMFS should retain the option—it is needed to get close to the quota.

(2) There is no reason to use it if fishermen are nearing the quota but NMFS should retain the option.

(3) The proposal impacts the ability to achieve the quota.

(4) NMFS should start the General category season at two fish per day.

(5) The multiple catch adjustment has never done any harm.

Those favoring the proposed regulations argued that NMFS should eliminate the flexibility because the scientific monitoring allocation under a moratorium does not require that the last fish in the allocation be landed. It serves no scientific monitoring purpose and should be eliminated.

Response: NMFS concludes that the Office Director's flexibility should remain. Although NMFS agrees that scientific indexing does not require that the "last fish in the allocation" be caught, NMFS wants to provide fishermen a reasonable opportunity to achieve the quota. Flexibility in the daily limit will contribute to that. Starting at two fish per day, as suggested, however, might work to the fishermen's disadvantage if the season has to be closed early in the fishing year. Starting at one giant bluefin tuna per day should provide the greatest opportunity for a longer season. At the start of the season, fish are small and worth less per pound. Raising the daily limit at the end of the season, if warranted, may increase fishermen's gross revenues.

The following comments also were received and although they do not specifically apply to the ten measures of the proposed rule, are generally relevant. They also are titled for clarification.

11. Inseason Adjustment or Reserve

Comment: Some commenters stated that the criteria for distributing the reserve should be based on the scientific usefulness of data collected from a category and the estimated amounts by which other categories may exceed their

quotas. Others stated that the reserve should be shared among all categories. Several noted that the General category has never received any reserve; in the past it was used for the Angling category. Some pointed out that the reserve should be used in the Incidental longline category also.

Response: NMFS agrees that the first priority for the use of the reserve is for scientific purposes and for this reason has allocated 54 mt to the General category, where it should provide the best use for monitoring the spawning stock biomass. NMFS will retain the flexibility to use the rest of the reserve as conditions in the fisheries warrant.

In reference to where the reserve has been used in the past, NMFS has used it to extend the seasons for the General and Harpoon Boat categories.

12. Enforcement and Observers

Comment: While enforcement and observer coverage are not precisely within the scope of this rulemaking, they are issues that many commenters believe are important factors in understanding the problems that are associated with the fishery. There was agreement by many commenters that overall enforcement of bluefin tuna regulations was not effective, and that NMFS and other entities responsible for enforcement should increase their strength and presence in the field. A vast number of commenters believe that, in particular, the recreational fishing segment needs far more coverage than is being attempted. Many commenters believe that proper enforcement for the Angling category was, in fact, nearly impossible due to its diffuse nature. Some commenters stated that there should be more observer coverage in the fishery, especially in certain categories, particularly the purse seiners. Some specific comments received on enforcement and observer coverage follow:

(1) NMFS should put observers on all vessels, especially the purse seiners.

(2) NMFS should monitor for black market sales to restaurants.

(3) NMFS cannot police the small fish catch and should do a better job.

(4) Historically, there has been differential enforcement in the categories.

(5) The Angling category is not controlled compared to the other directed categories.

(6) Enforcement is a problem.

Response: NMFS now has a new division for highly migratory species (HMS) management and a Special Agent in Charge for HMS is being created. With this new focus on HMS, NMFS anticipates better monitoring and enforcement in all categories. Any problems observed in these areas by fishermen should be reported to NMFS immediately.

Other comments received on enforcement and observer coverage were:

(1) NMFS should license every boat and fisherman and charge fees of $25–50/boat or $10/person.

(2) Fines should equal $25,000.

(3) There is a need to resolve the liability issue with observers.

(4) One commenter states that he had nothing against observers on his purse seiner but felt it would be a waste of taxpayer dollars.

(5) NMFS agents should be required to dress so that people can readily identify them.

Response: None of these comments is within the scope of this rulemaking.

13. Comments on Data Collection and Monitoring

Comment: Many comments were received regarding the adequacy of data collection used to monitor and enforce the fishery. Several commenters believed an accounting of the small bluefin catch cannot be accomplished. Some questioned the validity of the scientific assessments or the biological reference points used by managers.

An associated concern is the lack of a permit requirement in the Angling category—both commercial and recreational fishermen agree there is a need for permits in all categories. Some suggested improvements were to: require weekly reports; work closer with the recreational fishermen to collect data; tag all bluefin, including those caught recreationally; allow logbook reports to be faxed; require a 50-percent income eligibility for General category permits; charge $100 for permits and use the fees collected for management; use aerial surveys; and have a call-in number (fax) for landings.

Other specific comments were:

(1) Estimates of the small fish catch are low.

(2) Estimates of the small fish catch are high.

(3) NMFS has been unwilling to use aerial surveys or anecdotal evidence provided by fishermen and pilots.

Response: The data and assessments that NMFS uses to derive decisions for bluefin tuna and other large pelagic species governed under the ATCA are considered the best available. Every effort is made to assure their accuracy through the process of review by the national and international scientific community via the ICCAT assessment process (SCRS). Although NMFS scientists take lead roles in both data base development and assessment analyses, these tasks are conducted in an international forum and are subjected to the rigors of international scientific debate before they are accepted as the best available information. That is not to say that there is no uncertainty in the basic data and assumptions used in the assessments. Indeed, by using risk assessment methods, which incorporate the identified uncertainties and possible biases into assessment analyses, NMFS and ICCAT have strived to assure that assessment results and management advice consider these uncertainties so that decisionmakers can weigh the risks of their decisions.

NMFS agrees with the concepts of having permits for all vessels fishing for bluefin and tagging all bluefin landed. These suggestions will be addressed in a future rulemaking.

To the degree that fishermen's observations can be quantified, they are incorporated into the assessment analyses. In fact, scientific surveys of the angling fleet provide a basis for both indexing abundance of bluefin tuna and for estimating the harvest levels for some age classes in the stock. These surveys have indicated that catch rates of medium bluefin increased over the period 1987–1990, a feature consistent with observations reported by various fishermen. Although catch rates from these surveys increased over the time span indicated, the hypothesis that the increase was due to increased abundance was not supported by the analysis; it is not clear whether the observed increase was due mainly to increased availability, increased abundance, or some combination of these factors. Although these data were not considered appropriate for a base-case assessment, these observations, and several other sets of observations from other fisheries, were incorporated into analyses at the most recent bluefin assessment. They were used to examine the sensitivity of the assessment results and support the conclusion that the trends in estimated bluefin abundance were relatively insensitive to these observations.

Some fishermen believe that the assessments are inaccurate, since they have been seeing in recent years more bluefin, especially "mediums" and "small giants," an observation they believe is at odds with the most recent assessments. The assessments conducted over the last several years have, in fact indicated increases in the abundance of age groups of bluefin that are categorized as mediums (ages 6–7) and small giants (ages 8–9) relative to

the lowest abundance levels estimated for these age groups in 1982, the first year of ICCAT's restrictive harvest recommendations. However, taking into account current levels of harvest from these age groups and the relatively poor recruitment to the stock since 1987, it appears unlikely that the increased abundance levels for these ages will be sustained.

NMFS has promoted the application of fishery-independent methods for indexing abundance of bluefin and other fishery resources. Aerial and shipboard sampling surveys have been applied for estimating the abundance of numerous marine species, and NMFS has been a leader in the scientific development and application of these techniques for resource assessments. A NMFS-conducted fishery-independent shipboard survey of bluefin spawning success in the Gulf of Mexico was utilized by ICCAT for assessments of stock status. Fishery-independent aerial surveys for western Atlantic bluefin have not yet been implemented, due to the limited available resources for conducting such a survey for wide-ranging species like bluefin. However, NMFS has been working with commercial fishing industry representatives, including spotter pilots, to collect data that would allow evaluation of fishery-dependent spotter pilot data for developing a consistent time series for indexing bluefin abundance.

14. Procedural/General Comments

Comment: There was a widely accepted belief that the process for this rulemaking was being expedited, and that the associated comment period was too short. Associated with this opinion were the ideas of many commenters that the proposed rule constituted a major rulemaking, and should therefore require a full public process under the Magnuson Act, as amended. Also, many commenters believed that not enough notice or lead time was given to the interested parties so that they could get properly prepared and organized. One commenter felt that the EA was inadequate and that there should have been a longer comment period on the proposed regulations. Another believed an Environmental Impact Statement (EIS) should have been prepared and requested a longer comment period.

Response: NMFS disagrees with these comments. During December, 1991, and January, 1992, NMFS held four scoping meetings to inform the public and initiate discussion of options to implement the November 1991 ICCAT recommendations. A proposed rule was prepared based on comments received. Subsequently, eight formal hearings and one informal hearing were held on this draft rule during April and May, 1992. On April 28, 1992, NMFS published a proposed rule at 57 FR 17872 to amend the regulations governing the Atlantic bluefin tuna fishery. Public comment on the proposed rule was invited through May 26, 1992; comments received at a Congressional hearing on May 27, 1992, also were considered. All sectors of the fishery were represented at these meetings. Hundreds of oral and written comments with very thoughtful and constructive suggestions were received during the comment period, demonstrating that fishery interests did have adequate time to respond to the proposed rule.

NMFS believes that the EA and the finding of no significant impact are appropriate for this action. NMFS intends to prepare an EIS (which will assess the impacts of the bluefin tuna fishery on the environment) during development of a fishery management plan for tuna, under the Magnuson Fishery Conservation and Management Act.

Comment: A widespread belief exists that NMFS should have a process document in place for management of HMS before it attempts a rulemaking of this magnitude. Complaints were made that unlike the Fishery Management Council process, it was not known who the policymakers are.

Response: NMFS disagrees with this comment. This action is required to implement the recently adopted recommendations of ICCAT and to improve management of the bluefin tuna resource. NMFS has complied with the procedural requirements of the ATCA and the Administrative Procedure Act (APA), 5 U.S.C. section 553, and has augmented those procedures by holding scoping meetings. The process document referenced in the comments has been published in proposed form at 57 FR 22718, May 29, 1992. It establishes proposed procedures mainly for the development of fishery management plans and amendments under the Magnuson Act but consistent with the ATCA, not the solely ATCA rulemaking that is at issue here.

Comment: There was disapproval of the way in which the public meetings were scheduled and run. Many people voiced dissatisfaction with the size of the room at the Portsmouth, New Hampshire, meeting. Several commenters felt that representation of NMFS at the meetings was inadequate, and that NMFS should have had more, different, and/or higher-ranking officials present. Some individuals felt that simply taking notes and having tape recordings of the proceedings were evidence that NMFS was not interested in what they had to say, and that there should have been a stenographer present. Numerous comments were also made as to the time of day at which the hearings were held, with many people saying that people were being denied the right to speak because of the late hour. Others complained that fishermen from outside the hearing area dominated time that should have been given to local residents and local issues.

Response: Scheduling of the meetings was done in close consultation with representatives of the various fishing interests involved. Every effort was made to ensure that adequate room and time existed to guarantee that everyone who wanted to speak had a chance. Because of the interest in the matter being discussed, the meetings often lasted several hours in length. However, while it was necessary to limit some people in the amount of time they were allotted to speak, and other people chose not to stay until they were given a chance to speak, no one who wanted to speak was denied the opportunity.

At the first public meeting in Portsmouth, New Hampshire, the same room was chosen for the meeting that is used for New England Fishery Management Council groundfish hearings. The size of this room was deemed adequate when the public hearings were scheduled. However, as NMFS became aware of the fact that more room was going to be needed, efforts were made (also in conjunction with representatives of fishery interest groups) to find a larger place. None could be located in the short time left before the meeting. Fortunately, at all the rest of the meetings, NMFS was able to provide for larger rooms.

The ATCA does not specify what level of agency representation must be present at the public meetings. The person who was in charge of the public meeting process, Mr. Richard Stone, and who attended every meeting, is the person primarily responsible for coordinating management activities for HMS within NMFS. Accompanying Mr. Stone to most meetings were one or, in some cases, both of the people who work with Mr. Stone in the Highly Migratory Species Management Division of the NMFS Office of Fisheries Conservation and Management.

The use of note taking and tape recordings was well within the requirements of ATCA and the APA. The meetings were scheduled for evening hours to assure that people who wanted to come, but who had to work

during the day, would have the opportunity.

The problem with commenters from outside the hearing area first occurred at the Long Island, N.Y. hearing. Following that hearing, every effort was made to accommodate local residents and those that had to leave early. These comments also will be addressed in the final HMS process document.

Comment: This rulemaking conflicts with President Bush's announcement of a moratorium on regulations that affect businesses. The President will choose jobs when faced with a choice between jobs and the environment.

Response: President Bush's announcement of a moratorium on new regulations that are restrictive on businesses cannot, and does not, apply to regulations that are required by law to be implemented during the period of the moratorium. The ACTA provides a de facto deadline. Under the ATCA, the United States is obligated to implement recommendations adopted by ICCAT. Failure to implement enacting regulations would be inconsistent with U.S. law.

Comment: NMFS should have had a public meeting in Maine; Portland was suggested as a possible site.

Response: After receiving requests from fishermen at our hearing in Portsmouth, New Hampshire, for a hearing to be held in Maine, NMFS immediately scheduled and held a hearing, on the advice of several commenters, in Portland, Maine, on May 21, 1992. NMFS agreed that a hearing there would be important to ensure that all views were presented.

Comment: There is a need to know the final rules as soon as possible.

Response: NMFS agrees with this comment, and has worked to publish this rule as quickly as possible while thoroughly considering all comments and making the final rule as equitable as possible for fishermen while protecting the resource.

Comment: The proposed rule was changed from that presented at the scoping meetings; only having "three" scoping meetings was inadequate.

Response: Scoping meetings are for the purpose of receiving public comments and suggestions on possible solutions to a problem that is to be addressed in a proposed rulemaking. It is not the intent, nor is it usually possible, to describe the exact language of a proposed rule at scoping meetings. The public has the opportunity to respond to the exact language of the proposed rule during the public comment period.

NMFS believes four scoping meetings were adequate. They were held in locations calculated to enable fishermen from all categories to participate and provide input.

Comment: There was not enough notice given that the proposed rule had been changed from what was anticipated at the scoping meetings, and what the schedule of the public meetings would be.

Response: NMFS is required to publish the proposed regulations in the **Federal Register** in advance of the public meeting and the final rule. However, in order to ensure that as many people were informed of this proposed rule as possible, NMFS also sent out a press release and conducted a mailing to permitted Atlantic bluefin tuna fishermen on or about April 25, 1992. Because the Angling category is a non-permitted fishing category, and marine recreational fishermen are generally unlicensed along the Atlantic coast, there was no way to include in the mailing people who fish only in that category, but Angling category representatives were notified.

Comment: NMFS does not devote enough time, resources, and personnel to the HMS issue.

Response: As was mentioned earlier, NMFS now has a new division for HMS management and a Special-Agent-in-Charge for HMS is being created. With this new focus on HMS, NMFS anticipates better monitoring, response to fishery interests, and enforcement in all catgories.

Comment: NMFS should not hold public meetings for bluefin during the new and full moons.

Response: NMFS will make every effort to accommodate every fishery interest. However, sometimes, as in this case when fishermen from different fisheries with opposite needs are involved, that is not possible.

Comment: NMFS plotted to lose the *Montauk Boatman's and Captains Ass'n* v. *NMFS* lawsuit.

Response: This comment is beyond the scope of this rulemaking; however, NMFS notes that the Government won the lawsuit.

Some specific comments received on procedural and general issues follow:

(1) NMFS should pay attention to information from bona fide fishermen;

(2) The proposed rule is inconsistent with the ICCAT recommendations because the quota is specifically a scientific monitoring quota and the purse seine allocation does not provide any useful scientific information;

(3) The Gulf of Mexico should be closed and catches should be sampled across the spectrum of all age classes;

(4) Because fishermen don't know how to stand up for themselves legally, NMFS thinks it can push them around;

(5) NMFS should come up with a different plan;

(6) NMFS needs to get more people in the field to see what is going on;

(7) NMFS uses the General category as a buffer for the Angling category;

(8) NMFS has allowed excessive catches of small bluefin and should assess the number of spawners lost because of fishing over quota in the Angling category;

(9) NMFS should support fishermen and request an increase in quotas;

(10) In the future, NMFS should take reallocation proposals out to the public;

(11) Proposal 11 in the proposed rule was not clear;

(12) NMFS should explain what it considers a traditional fishery; and

(13) Fishermen are being hit with regulations that are too complicated.

Response: NMFS does listen to fishermen. Now that there is an HMS Management Division, personnel from this Division will try to get out and experience, first hand, the fisheries for every category.

NMFS agrees that the quota is a scientific monitoring quota, but does not believe that a Purse seine category is inconsistent with the ICCAT recommendations.

Comments on closing the Gulf of Mexico are beyond the scope of this rule. In the Angling category and the General category, catches are sampled across a wide spectrum of age-classes.

NMFS does not try to "push fishermen around." NMFS respects the views of fishermen and believes they do know how to get them considered.

NMFS does not use the General category as a buffer for the Angling category. The "buffer" for overages in any category has been the Inseason Adjustment amount (reserve).

ICCAT placed a restriction on the take of small bluefin to ensure that adequate numbers of immature bluefin reached spawning age. NMFS has assessed, and continues to assess, the performance of the fishery. This ICCAT restriction on small fish (less than 120 cm) of 15 percent of the western Atlantic quota of 2660 mt has never been exceeded. A specific NMFS assessment on the effect of staying within the Angling category quota showed minimal benefits to the spawning stock compared to staying with 1,160 mt as adopted by ICCAT for the 1982 fishing year.

NMFS tries to support fishermen by managing fishery resources for optimum yield or maximum sustainable yield,

which is an ICCAT objective. As stated previously, to raise the U.S. quota for bluefin tuna would violate the ICCAT recommendation and U.S. law, and could mean long-term losses for fishermen.

The reference to proposal 11 being unclear addressed item 11 of the measures in the proposed rule. This category of "other measures" was clearly defined on page 17876 of the proposed rule.

A traditional fishery is one that has been operating for a significant portion of the history of the entire fishery. The actual time can vary, depending on the length of time the entire fishery has been prosecuted.

NMFS attempts to make regulations as simple as possible.

Other procedural and/or general comments received:

(1) NMFS should make sure other countries are complying;

(2) NMFS should urge ICCAT to adopt trade resolutions;

(3) One speaker did not believe other countries are abiding by the rules;

(4) The United States should abandon ICCAT;

(5) The United States should encourage other countries to join ICCAT;

(6) The Administration should move NMFS out of the Department of Commerce;

(7) NMFS should impose an export tax on bluefin and use the money to improve enforcement;

Response: None of these comments is within the scope of this particular rulemaking.

15. Incidental Fishery

Comment: Aside from the quota, there were no changes proposed in the incidental catch regulations. Nevertheless, NMFS received many oral and written comments on the existing incidental catch provisions. Specific comments were:

(1) NMFS should avoid hurting the northern Incidental category, the northern and southern areas should be treated consistently;

(2) Southern area overages should not come out of the northern quota;

(3) Gear with a bycatch of bluefin should be prohibited in the spawning area during the spawning season;

(4) Circle hooks allow bluefin to be retrieved alive (longline), while "j" hooks more often kill the bluefin;

(5) NMFS should consider trip time limits, e.g., five to seven days;

(6) NMFS should allow two fish/trip;

(7) The northern incidental limit should state "or one fish;" and

(8) Close the Gulf of Mexico to all categories during spawning.

Response: Many of these comments have merit and deserve further consideration. However, because incidental catch provisions were not under consideration in the proposed regulation, and because changes in incidental catch regulations would be complex and require further analysis, NMFS concludes that it is appropriate to address changes in the incidental catch regulations, and other issues, in a future rulemaking.

16. Heads on Requirement

Comment: Although the proposed rule did not propose to change the current requirement that all tuna landed, except giant bluefin tuna, be landed with heads on and gills and tail intact, NMFS specifically invited comments on this issue. Almost everyone who commented on the current requirement opposed the regulation as unnecessary. However, Blue Water Fishermen's Association prepared a comprehensive statement on the issue. Blue Water stated: "It is unnecessary to have heads and gills intact in order to identify accurately the various tuna species; it disrupts the traditional and customary practice of removing heads, gills, and tails to facilitate marketing; it seriously compromises the quality of U.S. landed tuna by requiring that the gills and head remain attached; it could have serious effects on export markets for tunas; it places unnecessary burdens on commercial vessels with limited space in the hold; the requirement makes at-sea cleaning more hazardous; and the requirement creates problems for docks, fish dealers, and vessels who are required to remove and dispose of heads in port."

Response: NMFS agrees with these comments. The final regulations remove the "heads-on" requirement. After further investigation, NMFS believes that headed tuna can be identified from existing keys and available information. NMFS is working to develop user-friendly keys as additional help to identify tunas with the heads removed.

17. Tag and Release

Comment: NMFS received a number of comments that supported or suggested ways to improve a tag and release program. One comment suggested that tag and release stresses fish and that individuals would have to be knowledgeable on tag and release techniques to release fish alive. Other comments suggested tag and release only for small bluefin. Additional specific comments included:

(1) If NMFS believes the sale value of small fish is not important, it should establish a catch and release industry;

(2) NMFS should push tag and release;

(3) Even harpooners should get involved in tagging;

(4) Tag and release stresses fish;

(4) NMFS needs an awards program for tagging fish; and

(5) NMFS should reward the tagger, as well as the person who recaptures the tagged fish.

Response: NMFS agrees with the importance of a tag and release program and is working on ways to accommodate most of the comments on this issue. Additional money has been allocated for tags to ensure a supply for those that wish to participate. A toll-free number (800–437–3936) is available for information on tags and tagging. Personnel at the NMFS Southeast Fisheries Science Center are working on additional incentives for tagging and recapturing bluefin and other pelagic species. Information will be available and presented to fishermen on proper techniques of tagging to reduce stress or mortality of fish. NMFS does not agree that the small fish catch should be catch and release only. This has been an historical fishery, provides scientific data, and is allowed by ICCAT.

18. General Category Set-Aside

Comments: There were several comments on how to adjust and use the General category set-aside. They are as follows:

(1) Designate the set-aside for the New York Bight as in the past.

(2) NMFS should reduce the set-aside by ⅓ to 34 tons (United Boatmen).

(3) There is no justification for the "mudhole" set-aside.

(4) Change the line to the 43800 Loran C reading.

Response: NMFS has reduced this set-aside by 10 percent and left the flexibility to use it as in the past for the late New York Bight giant fishery if needed. NMFS will evaluate the impact of using the 43800 Loran C line for the cut-off.

19. Comments on the Economic Impact Analysis

Comment: Many miscellaneous comments concerned the economic impact of the proposed regulations and the analysis in the Regulatory Impact Review. This section responds individually to those comments.

Comment: The RIR was a good addition to the economic information on the fishery.

Response: Comment noted.

Comment: NMFS should determine the costs of the harvesting sector over the period of the reductions in order to calculate the number of small entities that might remain viable to experience any future benefits.

Response: NMFS does not disagree, but unfortunately, as explained in the RIR, there is not sufficient information to do such an analysis.

Comment: Two fish/person/day for school bluefin assumes the availability of fish in excess of 66 pounds (30 kg). This is not true in Virginia.

Response: NMFS agrees that large school fish are not caught generally off Virginia. However, increasing the bag limit so that more school fish could be retained per angler would result in an even shorter season than will be available under the final regulations. A longer season should be less disruptive to charter boat operators, their customers, and their supporting industries. For some anglers who otherwise would have caught more than one school fish, the experience may be less satisfying.

Comment: The private boat limit of one school fish/day will completely end this fishery.

Response: NMFS realizes that a limit of one school fish per day per boat is significant. As discussed above, this provision has been changed in the final rule.

Comment: There will be a major recession in the fishing communities if this regulation passes. The allocation scheme would result in a devastating loss in the Northeast.

Response: NMFS disagrees. There may be an adverse effect on some communities, but NMFS does not conclude that a "major recession" or a "devastating loss" would occur. The final regulations have been designed to lessen adverse effects, but a 10-percent decrease in the overall quota cannot be implemented without some adverse effects.

Comment: This proposal is not a minor rule and would have a significant effect on small businesses. The overall impact would be greater than $100 million.

Response: NMFS disagrees. The FRIR demonstrates that the effect of the final regulations is well below the threshold of a "major" regulation.

Comment: The combination of no sale of mediums and the cut in quota will devastate Cape Cod.

Response: The effect of the final regulations might be felt more in the Cape Cod area then in some other areas. The ban on sale of tuna less than 310 pounds (141 kg) has been modified so that fish in the newly defined "large medium" class may be sold.

Comment: The Angling category is a $300 million industry.

Response: NMFS has no knowledge of studies that provide or support this estimate and suspects it may be a reference to the charter boat industry for all species.

Comment: A Massachusetts fisherman cited 25,000 recreational fishermen in the State and 212 members in his club, of which 75 percent buy vessels for tuna fishing, but most do not catch a fish. There will be a large economic impact from the proposed regulations.

Response: The bluefin tuna fishery is important in Massachusetts and elsewhere. NMFS does not have a complete estimate of the number of fishermen in Massachusetts who fish for bluefin tuna. NMFS realizes that many fishermen attempt to catch tuna, but not all are successful.

Comment: The charter boat industry in Montauk will be down 50 percent due to the bag limit.

Response: NMFS does not know the relationship between bag limits and the desires of anglers to purchase charter boat services. Given that very few anglers have caught the higher bag limits, NMFS doubts that the decrease in business will be 50 percent.

Comment: The export value for bluefin is very small; the generated recreational value is greater. Bluefin are worth more as a recreational species than as a commercial species.

Response: NMFS has insufficient data at this time to determine what sector of the fishery has a greater value. As discussed in the FRIR there is no clear distinction between the "commercial" and "recreational" components of the fishery. Many of the bluefin exported were undoubtedly caught by fishermen who were fishing more for the experience than the income, but also welcomed the income.

Comment: Boats from Virginia cannot go all the way to the Gulf Stream to fish for yellowfin tuna—bluefin are closer to shore.

Response: NMFS realizes that bluefin are often closer to shore than yellowfin tuna and, therefore, are the more desirable fish for some anglers. The increase in the boat limit from one bluefin per private boat to two should provide more satisfaction to anglers pursuing bluefin, but may shorten the season.

Comment: The economic effects of the one fish/day for private boats has greater economic impact than it would on charter boats. There are only about 40 charter boats and 1,000–1,500 private boats.

Response: The differential for charter and party boats supports the employment (captains and mates) in that sector. As mentioned earlier, NMFS has modified the final rule to allow two school bluefin per private boat. Also NMFS is enhancing its tag and release program which, hopefully, will motivate more fishermen to participate in this program. NMFS believes these two changes should encourage fishermen to continue to fish for bluefin and reduce economic impacts that might be otherwise caused by fishermen choosing other activities rather than fishing.

Comment: The American Fisheries Society stated that the long-term gains from rebuilding the stock to more productive levels far outweigh short term losses.

Response: NMFS recognizes that the long-term potential yields from western Atlantic bluefin could be substantially higher than those currently available, provided the stock is allowed to recover to the level that will sustain such yields. Although there are limited data to quantify that the gains "far outweigh" the losses, NMFS scientists have estimated that the MSY for western Atlantic bluefin tuna could be in excess of 10,000 mt versus a quota of 2660 mt or less. NMFS took the position in favor of a 50 percent reduction in catch at the 1991 ICCAT meeting, which would have expedited the rebuilding process, but this was not adopted by ICCAT. Regardless, the ATCA limits the options that NMFS has to implement the ICCAT quota. The final regulations try for a reasonable balance between the competing short and long-term objectives.

Comment: NMFS is showing a lack of sensitivity to economic and social needs and has no plan to deal with these dislocations.

Response: NMFS has considered the potential adverse affects of the final regulations and has tried to mitigate, to the extent possible, adverse impacts on fishermen while also providing for stock rebuilding.

Comment: No-sale of mediums will benefit other countries that sell to Japan.

Response: As explained earlier, NMFS has adjusted the no-sale provision.

Comment: The rule will eliminate many fishermen from the industry.

Response: NMFS has tried to minimize the adverse economic impact of these regulations, but realizes that there will be some who may elect to leave the industry.

Comment: Giants are economically important to pay the bills.

Response: NMFS agrees.

Comment: Some data in the RIR are flawed. The commenter cited employment associated with packing, provision of dry ice, and airline business impacts equating to 52,800 man-hours.

Response: NMFS realizes that the data relating to transportation and shipping costs are limited and could well be low. However, the estimates provided by the commenter seem high. Regardless of which estimate is closer to reality, this estimate was only one of many pieces of information used in reaching our conclusion.

20. Miscellaneous Comments

(1) NMFS should correct the 2 percent limit in the northern longline fishery.

(2) NMFS should restrict the harvest based on tonnage and number of fish.

(3) NMFS should separate the categories for giants and mediums.

(4) There should be a rule that fishermen must predesignate and use only one port each year.

(5) NMFS should make boats fish in one area to prevent them from following the fish.

(6) The United States should replace the ICCAT commissioners.

(7) Most charter boat catches get filleted and put into coolers.

(8) What is NMFS 's position on pair-trawling?

(9) Many "bluefin" landed are actually longtail tuna.

Response: Several of these comments are beyond the scope of this rulemaking. Tuna are required to be landed in the round with fins intact. They can be headed and gutted but cannot legally be cut into fillets aboard a vessel.

Pair trawls (see section 285.31(a)(7)) are not an allowable gear for harvesting bluefin tuna.

According to Collette and Nauen (1983, Scombrids of the World. FAO Fisheries Synopsis No. 125, Vol. 2, Rome, 137pp), the longtail tuna, *Thunnus tonggol*, is a small tuna species with a maximum fork length of somewhat less than 140 cm. Although juveniles of this species and northern bluefin (*Thunnus thynnus*) are similar in appearance, it is unlikely that northern bluefin tuna from the west Atlantic would be confused with this species since *Thunnus Tonggol* is not scientifically documented to occur in the western Atlantic ocean and is mainly known from the Indo-West Pacific, Indian Ocean, and Red Sea regions.

Comment: One commenter suggested that the start of the season be delayed until August and one requested that the season not be delayed.

Response: NMFS does not believe that the start of the season should be delayed. Although there is some evidence that the value of the commercial harvest could be increased due to the higher prices per pound paid for bluefin near the end of the season, NMFS recognizes that many people pursue large medium and giant bluefin as a summer pastime, beginning in June.

Classification

This final rule is published under the authority of the ATCA, 16 U.S.C. 971 *et seq.* The Assistant Administrator has determined that this final rule is necessary to implement the recommendations of ICCAT and is necessary for management of the Atlantic bluefin tuna fishery.

An EA, prepared by NMFS, concluded that there will be no significant impact on the human environment as a result of this action. A copy of the EA is available (see ADDRESSES).

The Assistant Administrator has determined, based on the FRIR prepared for this rule, that this is not a "major" rule requiring a Regulatory Impact Analysis under E.O. 12291. The action will not have a cumulative effect on the economy of $100 million or more, nor will it result in a major increase in costs to consumers, industries, Government agencies, or geographical regions. No significant adverse effects on competition, employment, investment, productivity, innovation, or competitiveness of U.S.-based enterprises are anticipated.

The General Counsel of the Department of Commerce certified to the Small Business Administration that this rule will not have a significant economic impact on a substantial number of small entities under the Regulatory Flexibility Act. As a result, a regulatory flexibility analysis was not prepared. According to the FRIR, the reduction in overall bluefin catch necessary to comply with the ICCAT recommendations is expected to result in aggregate annual net revenue losses for the fleet amounting to an estimated $1.3 million (see FRIR, section VII). You may obtain a copy of the FRIR from NMFS (see ADDRESSES).

The Assistant Administrator has determined that this rule will be implemented in a manner that is consistent to the maximum extent practicable with the approved coastal zone management programs of the Atlantic, Gulf of Mexico, and Caribbean States that have approved coastal zone management programs. These determinations were submitted for review by the responsible State agencies under section 307 of the Coastal Zone Management Act. South Carolina, Rhode Island, Delaware, and Louisiana agreed with the determination. The other State agencies did not comment within the statutory time period; therefore, consistency is presumed.

This rule does not contain any new collection-of-information requirements subject to the Paperwork Reduction Act. It repeats requirements that were approved by the Office of Management and Budget (OMB) under OMB control numbers 0648-0202 and 0648-0239. They are repeated because changes in the definitions for size classes and the change in size for sale required changing or deleting several words in existing text. The public reporting burden for these collections of information is estimated to average 15 minutes per response for a vessel permit application and 2 minutes per response for dealer reports. These estimates include the time for reviewing instructions, searching existing data sources, gathering and maintaining the data needed, and completing and reviewing the collection of information. Send comments regarding these burden estimates or any other aspects of these collections of information, including suggestions for reducing the burden, to NMFS (see ADDRESSES) and the Office of the Information and Regulatory Affairs, OMB, Washington, DC 20503 (Attention: NOAA Desk Officer).

This rule does not contain policies with federalism implications sufficient to warrant preparation of a federalism assessment under E.O. 12612.

The Assistant Administrator also finds for good cause that it is impracticable and contrary to the public interest to delay for 30 days the effective date of these regulations, under section 553(d) of the Administrative Procedure Act. This rule must be implemented as soon as possible under the ATCA to meet the legally binding recommendations from the 1991 ICCAT meeting (explained above). Also, the 1992 fishing season has started and if restrictions on catch contained in this rule are not in place immediately, quotas could be reached or exceeded early in the fishing season, causing early closures and severe economic impacts on certain geographical areas with traditionally late season fisheries.

List of Subjects in 50 CFR Part 285

Fisheries, Penalties, Reporting and recordkeeping requirements, Treaties.

Dated: July 16, 1992.

William W. Fox, Jr.,

Assistant Administrator for Fisheries, National Marine Fisheries Service.

For the reasons set forth in the preamble, 50 CFR part 285 is amended as follows:

PART 285—ATLANTIC TUNA FISHERIES

1. The authority citation for part 285 continues to read as follows:

Authority: 16 U.S.C. 971 *et seq.*

2. In § 285.2, new definitions for *charter boat, Director, party boat,* and *private boat* are added in alphabetical order to read as follows:

§ 285.2 Definitions.

* * * * *

Charter boat means a vessel whose operator is licensed by the U.S. Coast Guard to carry six or fewer paying passengers and whose passengers fish for a fee.

* * * * *

Director means the Director of the Office of Fisheries Conservation and Management, 1335 East-West Highway, Silver Spring, MD 20910.

* * * * *

Party boat means a vessel whose operator is licensed by the U.S. Coast Guard to carry seven or more paying passengers and whose passengers fish for a fee.

* * * * *

Private boat means any vessel fishing in the Angling category other than charter or party boats.

* * * * *

3. In § 285.3, paragraph (f) is revised, and a new paragraph (h) is added, to read as follows:

§ 285.3 Prohibitions

* * * * *

(f) For any person or vessel subject to the jurisdiction of the United States to land any tuna in forms other than round (fins intact), or other than with the head removed and eviscerated.

* * * * *

(h) For any person to refuse to provide information requested by NMFS personnel or anyone collecting information for NMFS relating to the scientific monitoring or management of tuna.

4. In § 285.20, paragraph (a)(1)(i) is removed, paragraphs (a)(1)(ii) through (a)(1)(iv) are redesignated paragraphs (a)(1)(i) through (a)(1)(iii), respectively; and newly redesignated paragraphs (a)(1)(i) and (a)(1)(ii) and paragraphs (b)(1) and (b)(3) are revised to read as follows:

§ 285.20 Fishing seasons.

(a) * * *

(1) * * *

(i) For anglers fishing for school, large school, and small medium Atlantic bluefin tuna under the quota specified in § 285.22(d);

(ii) For vessels permitted in the Incidental Catch category fishing under the quota specified in 285.22(e); and

* * * * *

(b) * * *

(1) The Assistant Administrator will monitor catch and landing statistics, including catch and landing statistics from previous years and projections based on those statistics, of Atlantic bluefin tuna by vessels other than those permitted in the Purse Seine category. On the basis of these statistics, the Assistant Administrator will project a date when the catch of Atlantic bluefin tuna will equal any quota under § 285.22, and will publish a notice in the **Federal Register** stating that fishing for or retaining Atlantic bluefin tuna under the quota must cease on that date at a specified hour.

* * * * *

(3) A vessel permitted in the Purse Seine category may fish under the quota specified in § 285.22(c) only until the allocation assigned or transferred under § 285.25(d) to that vessel is reached. Upon reaching its individual vessel allocation of Atlantic bluefin tuna, a vessel will be deemed to have been given notice that the fishery for such tuna is closed to that vessel.

* * * * *

5. Section 285.21 is amended by revising paragraphs (a) and (b) to read as follows:

§ 285.21 Vessel permits.

(a) *Permit requirements.* Each vessel that fishes for or takes Atlantic bluefin tuna, except vessels fishing in the Angling category under § 285.24(d), must have an appropriate permit issued under this section.

(b) *Categories of permits.* The Regional Director will issue a permit to each vessel for only one of the following categories: General (handgear), Harpoon Boat, Purse Seine, or Incidental Catch. A permitted vessel is entitled to fish for Atlantic bluefin tuna only under the quota for the category in which it is permitted, and must use gear appropriate to that category. Anglers also may fish for school, large school, and small medium Atlantic bluefin tuna from a vessel that has a permit for the General category, or for the Incidental Catch category (rod and reel) as specified in § 285.23(d). Anglers will remain subject to provisions of this subpart applicable to angling. The Regional Director will issue permits to catch and retain Atlantic bluefin tuna under § 285.22(c) only to current owners of those purse seine vessels, or their replacements, that were granted allocations under this subpart and landed Atlantic bluefin tuna in the fishery for Atlantic bluefin tuna during the period 1980 through 1982. The Regional Director will not issue a permit to take Atlantic bluefin tuna under this subpart to any vessel that was replaced with another vessel and retired from the purse seine fishery during the period 1980 through 1982, unless that vessel is replacing another vessel being retired from the fishery.

* * * * *

6. Section 285.22 is revised to read as follows:

§ 285.22 Quotas.

The total annual amount of Atlantic bluefin tuna that may be caught and retained by persons and vessels subject to U.S. jurisdiction in the regulatory area is subdivided as follows:

(a) *General.* The total amount of large medium and giant Atlantic bluefin tuna that may be caught and retained in the regulatory area by vessels permitted in the General category under § 285.21(b) is 531 mt. If the Assistant Administrator determines (based on dealer reports, availability of large medium or giant Atlantic bluefin tuna on the fishing grounds, and any other relevant information), that variations in seasonal distribution, abundance, or migration patterns of Atlantic bluefin tuna, and the catch rate, may prevent fishermen in an identified area from harvesting their share of the quota, the Assistant Administrator may set aside an allocation for such area. The amount of any allocation will not exceed the greater of 40 mt or the maximum reported landings in the identified area in any of the preceding 3 years. The Assistant Administrator will publish a notice of any allocation and its basis in the **Federal Register.** The daily catch limit for the identified area will be set at one large medium or giant Atlantic bluefin tuna per day per vessel.

(b) *Harpoon Boat.* The total amount of large medium and giant Atlantic bluefin tuna that may be caught and retained in the regulatory area by vessels permitted in Harpoon Boat category under § 285.21(b) is 53 mt.

(c) *Purse Seine.* The total amount of large medium and giant Atlantic bluefin tuna that may be caught and retained in the regulatory area by vessels permitted in the Purse Seine category under § 285.21(b) is 301 mt.

(d) *Angling.* The total amount of school, large school, and small medium Atlantic bluefin tuna that may be caught and retained in the regulatory area by anglers is 219 mt. No more than 100 mt of this quota may be school Atlantic

bluefin tuna. This quota is further subdivided as follows:

(1) 47 mt of school Atlantic bluefin tuna may be landed in Delaware and states south;

(2) 53 mt of school Atlantic bluefin tuna may be landed in New Jersey and states north.

(e) *Incidental.* The total amount of Atlantic bluefin tuna that may be caught and retained in the regulatory area by vessels permitted in the Incidental Catch category under § 285.21(b) is 226 mt for the 2-year period 1992–1993. This quota is further subdivided as follows:

(1) In 1992, 132 mt for longline vessels. No more than 104 mt may be taken in the area south of 36°00′ N. latitude.

(2) In years after 1992, 85 mt for longline vessels. No more than 67 mt may be taken in the area south of 36°00′ N. latitude.

(3) For vessels fishing for species of fish other than tuna, 5 mt in 1992 and 4 mt in years after 1992.

(f) *Inseason adjustment amount.* The total amount of Atlantic bluefin tuna that will be held in reserve for inseason adjustments is 31 mt. The Assistant Administrator may allocate any portion (from zero to 100 percent) of this amount to any category or categories of the fishery, including research activities authorized under § 285.1(c). The Assistant Administrator will publish a notice of allocation of any inseason adjustment amount in the Federal Register before such allocation is to become effective. Before making any such allocation, the Assistant Administrator will consider the following factors:

(1) The usefulness of information obtained from catches of the particular category of the fishery for biological sampling and monitoring the status of the stock;

(2) The catches of the particular gear segment to date and the likelihood of closure of that segment of the fishery if no allocation is made;

(3) The projected ability of the particular gear segment to harvest the additional amount of Atlantic bluefin tuna before the anticipated end of the fishing season; and

(4) The estimated amounts by which quotas established for other gear segments of the fishery might be exceeded.

(g) The catching or retention of school, large school or small medium Atlantic bluefin tuna is prohibited except as allowed by paragraph (d) of this section.

(h) In 1993, if the Assistant Administrator determines, based on landing statistics and other available information, that a 1992 quota in any category, or as appropriate, subcategory, has been exceeded or has not been reached, the Assistant Administrator will subtract the overage from or add the underage to that quota for 1993; provided that the total of the 1992 harvest plus the 1993 adjusted quotas and the reserve does not exceed 2,497 mt. The Assistant Administrator will publish any amounts to be subtracted or added and the basis for the quota reductions or increases in the Federal Register.

7. Section 285.23 is revised to read as follows:

§ 285.23 Incidental catch.

(a) *Herring, mackerel, and menhaden purse seine vessels and vessels using fixed gear other than longlines or traps (pounds, weirs, and gill-nets).* Subject to the quotas in § 285.22, any person operating a vessel fishing with these types of gear principally for species of fish other than tuna and possessing an Incidental Catch permit issued under § 285.21 may retain, during any fishing trip, large medium and giant Atlantic bluefin tuna, provided that the total amount of Atlantic bluefin tuna taken does not exceed 2 percent, by weight, of all other fish aboard the vessel at the end of each fishing trip.

(b) *Traps.* Subject to the quotas in § 285.22, any person operating a vessel possessing an Incidental Catch permit issued under § 285.21 that catches Atlantic bluefin tuna incidentally while fishing with traps, may retain large medium and giant Atlantic bluefin tuna, provided that such tuna do not exceed 2 percent, by weight, of the total amount of all other species caught within the preceding 30-day period.

(c) *Longlines.* Subject to the quotas in § 285.22, any person operating a vessel using longline gear possessing an Incidental Catch permit issued under § 285.21 may retain or land large medium and giant Atlantic bluefin tuna as an incidental catch. The amount of Atlantic bluefin tuna retained or landed may not exceed:

(1) One fish per vessel per fishing trip landed south of 36°00′ N. latitude, provided that at least 2,500 pounds (1,134 kg) of species other than Atlantic bluefin tuna are caught and offloaded from the same trip and are recorded on the dealer weighout as sold; and

(2) Two percent by weight of all other fish landed, offloaded and documented on the dealer weighout as sold at the end of each fishing trip, north of 36°00′ N. latitude.

(d) *Rod and reel.* Subject to the quotas in § 285.22, any person operating a vessel using rod and reel gear and possessing an Incidental Catch permit issued under § 285.21 may catch and retain annually one large medium or giant Atlantic bluefin tuna as an incidental catch. The permit holder must report to the nearest NMFS enforcement office within 24 hours of landing any large medium or giant bluefin, and must make the tuna available for inspection and attachment of a metal tag. No such Atlantic bluefin tuna may be sold or transferred to any person for a commercial purpose except for taxidermic purposes.

(e) *Purse Seine.* Vessels in the Purse Seine category fishing for other tunas are allowed a 1-percent per trip (by weight) incidental take of bluefin less than 178 cm. Any landings of these incidental catches may not be sold and will be counted against the Purse Seine category quota.

(f) *Other gear.* Incidental harvest of Atlantic bluefin tuna by gear other than specified in § 285.22 or in this section is prohibited.

8. Section 285.24 is revised to read as follows:

§ 285.24 Catch limits.

(a) *General category.* From June 1, vessels permitted in the General category under § 285.21 may catch only one large medium or giant Atlantic bluefin tuna per day per vessel. The Assistant Administrator may adjust the daily catch rate limit to a maximum of three giant Atlantic bluefin tuna per day per vessel based on a review of dealer reports, daily landing trends, availability of the species on the fishing grounds, and any other relevant factors, to provide for maximum utilization of the quota. The Assistant Administrator will publish a notice in the Federal Register of any adjustment in the allowable daily catch limit made under this paragraph. Operators of vessels permitted in the General category may possess large medium and giant Atlantic bluefin tuna in an amount not to exceed a single day's catch, regardless of the length of the trip, as allowed by the daily catch limit in effect at that time.

(b) *Harpoon Boat category.* Vessels permitted in the Harpoon Boat category may catch multiple giant bluefin tuna but only one large medium bluefin tuna per day per vessel may be caught.

(c) *Purse Seine category.* Vessels permitted in the Purse Seine category may catch large mediums, provided that the total amount of such taken does not exceed 10 percent by weight of the total amount of giant Atlantic bluefin tuna aboard the vessel at the end of each fishing trip.

(d) *Angling category.*—(1) *Anglers.* Anglers may catch and retain each day no more than two Atlantic bluefin tuna,

only one of which may be a small medium and only one of which may be a school bluefin tuna. Anglers may not retain young school, large medium, or giant Atlantic bluefin tuna.

(2) *Party and charter boats*—(i) Party and charter boats may catch and retain each day the bag limit for anglers specified in paragraph (d)(1) of this section for each angler on board; provided, however, that no more than one small medium bluefin tuna may be retained each day, regardless of the number of anglers on board. The captain, mate, or crew member of a party or charter boat is not an "angler" for purposes of this section.

(ii) The Assistant Administrator may increase the bag limit for school tuna for anglers on party and charter boats from one to two, and may reduce it from two to one, based on a review of daily landing trends, availability of the species on the fishing grounds, and any other relevant factors, to provide for maximum utilization of the quota. The Assistant Administrator will publish a notice in the **Federal Register** of any adjustment in the bag limit made under this paragraph.

(3) *Private boats.* Private boats may catch and retain each day the bag limit for anglers specified in paragraph (d)(1) of this section for the number of anglers on board; provided, however, that no more than one small medium and two school bluefin tuna may be retained each day, regardless of the number of anglers on board.

9. Section 285.26 is amended by revising the table to read as follows:

§ 285.26 Size Classes.

* * * * *

Size class	Total fork length	Pectoral fin fork length	Approx. round weight
Young school	<26 in (<66 cm)	<19 in (<49 cm)	14 lbs (<6.4 kg).
School	26 to <45 in (66 to <115 cm)	19 to <33 in (49 to <85 cm)	14 to <66 lbs. (6.4 to <30 kg).
Large school	45 to <57 in (115 to <145 cm)	33 to <42 in (85 to <108 cm)	66 to <135 lbs. (30 to <62 kg).
Small Medium	57 to <70 in (145 to <178 cm)	42 to <52 in (108 to <132 cm)	135 to <235 lbs. (61 to <107 kg).
Large Medium	70 to <77 in (178 to <196 cm)	52 to <57 in (132 to <145 cm)	235 to <310 lbs. (107 to <141 kg).
Giant	77 in or greater (196 cm or greater)	57 in or greater (145 cm)	310 lbs or greater. (141 kg or greater).

10. Section 285.29 is amended by revising paragraph (a) to read as follows:

§ 285.29 Dealer recordkeeping and reporting.

* * * * *

(a) Must submit to the Regional Director a daily report on a reporting card provided by NMFS, within 24 hours of the purchase or receipt of each Atlantic bluefin tuna that was purchased or received from the person or vessel that harvested the fish. Said card must be postmarked within 24 hours of the purchase or receipt of each Atlantic bluefin tuna. Each reporting card must be signed by the vessel permit holder or vessel operator to verify the name of the vessel that landed the fish and must show the Atlantic bluefin tuna vessel permit number, metal tag number affixed to the fish by the dealer or assigned by an authorized officer, the date landed, the port where landed, the round or dressed weight, the fork length, gear used, and area where caught.

* * * * *

11. Section 285.30 is amended by revising paragraphs (c)(1) and (d) to read as follows:

§ 285.30 Metal tags.

* * * * *

(c) * * *

(1) A dealer or agent must affix a metal tag to each Atlantic bluefin tuna purchased or received immediately upon its offloading from a vessel. The metal tag must be affixed to the tuna between the fifth dorsal finlet and the keel.

* * * * *

(d) *Removal of tags.* A metal tag affixed to any Atlantic bluefin tuna must remain on the tuna until the tuna is either cut into portions or sold for export from the United States. If the tuna or tuna parts subsequently are packaged for transport for domestic commercial use or for export, the tag number must be written legibly and indelibly on the outside of any package or container. Tag numbers must be recorded on any document accompanying shipment of bluefin tuna for commercial use or export.

12. Section 285.31 is amended by revising paragraphs (a)(10), (a)(17), (a)(18), (a)(26), and (a)(28) and adding paragraphs (a)(34) through (a)(38) to read as follows:

§ 285.31 Prohibitions.

(a) * * *

(10) Land any Atlantic bluefin tuna in forms other than round (fins intact), or other than with the head removed and eviscerated;

* * * * *

(17) Fail to release immediately with a minimum of injury any Atlantic bluefin tuna that will not be retained;

(18) Fail to affix immediately to any Atlantic bluefin tuna, between the fifth dorsal finlet and the keel, an individually numbered metal tag when the tuna has been received for a commercial purpose or purchased by that person from any person or vessel having caught such tuna;

* * * * *

(26) Fish for or catch Atlantic bluefin tuna with longline gear except as provided in § 285.23(e);

* * * * *

(28) Fish for or catch school, large school or small medium Atlantic bluefin tuna with gear other than hook and line, which is held by hand or rod and reel made for this purpose;

* * * * *

(34) Retain young school Atlantic bluefin tuna for any purpose;

(35) Sell, offer for sale, purchase, receive for a commercial purpose, trade or barter any Atlantic bluefin tuna other than a large medium or giant;

(36) Refuse to permit access of NMFS personnel to inspect any records relating to, or area of custody of, Atlantic bluefin tuna;

(37) Retain or land any Atlantic bluefin tuna by gear other than specified in § 285.22 or § 285.23; or

(38) Retain or land any bluefin tuna less than 178 cm from a permitted vessel other than one issued a General category permit and having anglers on

board, or an Incidental category (rod and reel) permit under § 285.21, or a Purse Seine category permit and operating under § 285.23(e).

§§ 285.1, 285.5, 285.25 [Amended]

13. In addition to the amendments set forth above, in 50 CFR part 285 remove the words "Regional Director" and add, in their place, the word "Director" in the following places:

(a) Section 285.1(c);
(b) Section 285.5(c); and
(c) Section 285.25(b).

[FR Doc. 92-17346 Filed 7-20-92; 5:00 pm]

BILLING CODE 3510-22-M

---

50 CFR Part 655

[Docket No. 920246-2168]

Atlantic Mackerel, Squid, and Butterfish Fisheries

AGENCY: National Marine Fisheries Service (NMFS), NOAA, Commerce.

ACTION: Final initial specifications for the 1992 squid and butterfish fisheries.

SUMMARY: NMFS issues this final notice of initial specifications for the 1992 fishing year for squid and butterfish. Regulations governing these fisheries require the Secretary of Commerce (Secretary) to publish specifications for the current fishing year. This action is intended to fulfill this requirement and to promote the development of the U.S. squid and butterfish fisheries.

DATES: Effective July 23, 1992, through December 31, 1992.

ADDRESSES: Copies of the Mid-Atlantic Fishery Management Council's "*quota paper*" and recommendations are available from John C. Bryson, Executive Director, Mid-Atlantic Fishery Management Council, Room 2115, Federal Building, 300 South New Street, Dover, DE 19901.

Copies of the environmental assessment prepared by the Northeast Regional Office for this action are available from Richard B. Roe, Regional Director, Northeast Region, NMFS, 1 Blackburn Circle, Gloucester, MA 01930.

FOR FURTHER INFORMATION: Myles Raizin, 508-281-9104 or Richard Seamans, 508-281-9244.

SUPPLEMENTARY INFORMATION: Regulations implementing the Fishery Management Plan for Atlantic Mackerel, Squid, and Butterfish Fisheries (FMP) prepared by the Mid-Atlantic Fishery Management Council (Council), appear at 50 CFR part 655. These regulations stipulate that the Secretary will publish a notice specifying the initial annual amounts of the initial optimum yield (IOY), as well as the amounts for allowable biological catch (ABC), domestic annual harvest (DAH), domestic annual processing (DAP), joint venture processing (JVP), and total allowable levels of foreign fishing (TALFF) for the species managed under the FMP. No reserves are permitted under the FMP for any of these species. Procedures for determining the initial annual amounts are found at § 655.21. Proposed initial specifications for the 1992 Atlantic mackerel, squid, and Butterfish fisheries were published on February 27, 1992 (57 FR 6699).

The following table contains the final initial specifications for *Loligo* squid, *Illex* squid, and butterfish. These specifications are based on the recommendations of the Council, the environmental assessment prepared for this action, and public comment.

INITIAL ANNUAL SPECIFICATIONS FOR SQUID AND BUTTERFISH FOR THE 1992 FISHING YEAR

Specifications			Butterfish
Loligo	Squid	Illex	
Max OY [1]	44,000	30,000	16,000
ABC [2]	37,000	30,000	16,000
IOY	34,000	27,000	10,000
DAH	34,000	27,000	10,000
DAP	34,000	27,000	10,000
JVP	0	0	0
TALFF	0	0	0

[1] Max OY stated in the FMP.
[2] IOY can rise to this amount.

Comments and Responses

Five sets of comments on the proposed initial specifications were received. All commenters addressed the proposed zero TALFF specification for Atlantic mackerel; four of the commenters opposed this proposed specification, while one commenter supported it. The comments concerning the proposed zero TALFF for Atlantic mackerel and responses to those comments will be summarized in a separate final notice of initial specifications for that species. One commenter opposed the 3,000 mt specification for JVP in the *Illex* squid fishery.

Comment: There should be no joint venture allocation for *Illex* because such product would compete with DAP product, thereby resulting in market disruption and lost revenues.

Response: NMFS views this comment with supporting documents as a reasonable argument for the elimination of the 3,000 mt proposed JVP for *Illex*. The "processor preference" amendment to the Magnuson Fishery Conservation and Management Act allows the Secretary to protect developing U.S. fisheries by not supplying product to foreign nations that may directly compete with U.S.-processed products and, thus, restrict the development of markets for these products.

Comment: Prior to 1991, total annual *Illex* landings did not exceed 12,000 mt since 1983. What is the scientific basis for determining that a doubling of the allowable harvest would not adversely impact spawning recruitment in light of the agency's acknowledgement of the unstable population dynamics for a species with a short life span?

Response: NMFS recognizes that uncertainty is pervasive in this fishery with regard to stock abundance and availability. However, the maximum sustainable yield for this fishery has been estimated to be 40,000 mt. Therefore, the specification of 27,000 mt is conservative in regard to abundance considerations.

Comment: How does NMFS reconcile a doubling of the proposed quota with the possibility that a downward cyclic trend may be on the horizon with regard to stock abundance?

Response: The cycle referred to by the commentor is derived from an all-sizes research survey index. The 1990 index, as a measure of relative stock abundance, was 74 percent above the mean index for the years 1967 to 1990. Since the specifications for this fishery are annual, NMFS believes that raising the ABC in periods of high abundance is rational.

Changes From the Proposed Specifications

The Director, Northeast Region, NMFS (Regional Director) has chosen to eliminate the proposed JVP allocation (3,000 mt) for the *Illex* squid fishery, thereby reducing the recommended JVP for *Illex* to zero. This action results in the lowering of the IOY, DAH, and DAP to 27,000 mt. However, the ABC will remain at 30,000 mt equal to the Maximum OY for the *Illex* squid fishery. NMFS concurs with public comment that suggested that JVP for *Illex* in 1992 would directly compete with the domestic processed product and hinder growth of the domestic freezer trawler fishery.

Final specifications for Atlantic mackerel for the 1992 fishing year are not included in this action. The Council, in its analysis for specifications for Atlantic mackerel, recommended zero TALFF. The Council used testimony from industry and analysis of nine economic factors found at § 655.21(b)(2)(ii) of the regulations and concluded that if directed foreign fishing

were allowed, it would inhibit the growth and development of the U.S. mackerel processing industry. Further attempts by NMFS to analyze the need and justification for zero TALFF for Atlantic mackerel have not yet provided a convincing argument for that specification presented by the Council. Therefore, the Regional Director recently requested the Council to give the specification for TALFF for Atlantic mackerel additional consideration and provide further analysis.

Classification

This action is authorized by 50 CFR part 655 and complies with E.O. 12291 and the National Environmental Policy Act.

Authority: 16 U.S.C. 1801 *et seq.*

List of Subjects in 50 CFR Part 655

Fisheries, Reporting and recordkeeping requirements.

Dated: July 20, 1992.

Michael F. Tillman,

Acting Assistant Administrator for Fisheries, National Marine Fisheries Service.

[FR Doc. 92-17545 Filed 7-23-92; 8:45 am]

BILLING CODE 3510-22-M

---

50 CFR Part 661

[Docket No. 920412-2112]

Ocean Salmon Fisheries Off the Coasts of Washington, Oregon, and California

AGENCY: National Marine Fisheries Service (NMFS), NOAA, Commerce.

ACTION: Inseason adjustment.

SUMMARY: NMFS announces the modification of the chinook salmon catch quota for the commercial fishery from Point Arena to Point San Pedro, California, which opens as regularly scheduled on August 1, 1992. The Director, Northwest Region, NMFS (Regional Director), has determined that the quota underage from the May commercial fishery from Point Reyes to Point San Pedro, California, should be added to the August fishery from Point Arena to Point San Pedro, and that the August quota should be adjusted to account for the lower impacts on Klamath fall chinook salmon in August compared to May. Therefore, the revised August quota is 21,500 chinook salmon. This action is intended to maximize the harvest of salmon without exceeding the ocean share allocated to the commercial fishery in this area.

DATES: Effective at 0001 hours local time, August 1, 1992. Actual notice to affected fishermen was given prior to that time through a special telephone hotline and U.S. Coast Guard Notice to Mariners broadcasts as provided by 50 CFR 661.23. Comments will be accepted through August 7, 1992.

ADDRESSES: Comments may be mailed to Rolland A. Schmitten, Director, Northwest Region, National Marine Fisheries Service, NOAA, 7600 Sand Point Way NE., BIN C15700-Bldg., Seattle, WA 98115-0070; or Gary Matlock, Operations Director, Southwest Region, National Marine Fisheries Service, NOAA, 501 West Ocean Boulevard, suite 4200, Long Beach, CA 90802-4213. Information relevant to this notice has been compiled in aggregate form and is available for public review during business hours at the office of the NMFS Northwest Regional Director.

FOR FURTHER INFORMATION CONTACT: William L. Robinson at (206) 526-6140, or Rodney R. McInnis at (310) 980-4030.

SUPPLEMENTARY INFORMATION: In its emergency interim rule and notice of 1992 management measures (57 FR 19388, May 6, 1992), NMFS announced that the 1992 commercial fisheries between Point Arena and Point San Pedro, California, subject to chinook salmon quotas, are as follows: (1) An all-except-coho fishery open from Point Reyes to Point San Pedro, May 1 through the earlier of May 10 or the attainment of a subarea catch quota of 10,000 chinook salmon, and (2) from Point Arena to Point San Pedro, an all-species fishery open from August 1 through the earliest of August 31 or the attainment of either a subarea catch quota of 8,000 chinook salmon or an impact quota of coho salmon south of Cape Falcon, Oregon. Furthermore, any chinook salmon quota overage or underage from the May fishery will be subtracted from or added to the quota for the August fishery.

Based on the best available information on July 10, the commercial catch during the May fishery totaled about 1,800 chinook salmon, leaving 8,200 fish unharvested from the May quota of 10,000 chinook salmon. Therefore, these fish are transferred to the regularly scheduled August fishery described above (57 FR 19388, May 6, 1992). These quotas were set preseason, based on fishery impacts on Klamath River fall chinook salmon. The ocean chinook salmon fishery south of Point Arena has lower impacts on the Klamath River fall chinook in August than it does in May. Therefore, the chinook salmon catch quota for the August commercial fishery from Point Arena to Point San Pedro, California, is further adjusted to 21,500 fish. Modification of quotas is authorized by regulations at § 661.21(b)(1)(i).

In accordance with the revised inseason notice procedures of 50 CFR 661.23, actual notice to fishermen of this action was given prior to 0001 hours local time, August 1, 1992, by telephone hotline number (206) 526-6667 or (800) 662-9825 and by U.S. Coast Guard Notice to Mariners broadcasts on Channel 16 VHF-FM and 2182 KHz.

The Regional Director consulted with representatives of the Pacific Fishery Management Council, the Oregon Department of Fish and Wildlife, and the California Department of Fish and Game regarding this adjustment of the commercial chinook salmon quota between Point Arena and Point San Pedro, California. The State of California will manage the commercial fishery in State waters adjacent to this area of the exclusive economic zone in accordance with this federal action. This notice does not apply to other fisheries that may be operating in other areas.

Because of the need for immediate action, the Secretary of Commerce has determined that good cause exists for this notice to be issued without affording a prior opportunity for public comment. Therefore, public comments on this notice will be accepted through August 7, 1992.

Other Matters

This action is authorized by 50 CFR 661.23 and is in compliance with Executive Order 12291.

List of Subjects in 50 CFR Part 661

Fisheries, Fishing, Indians, Reporting and recordkeeping requirements.

Authority: 16 U.S.C. 1801 *et seq.*

Dated: July 20, 1992.

David S. Crestin,

Acting Director, Office of Fisheries Conservation and Management, National Marine Fisheries Service.

[FR Doc. 92-17483 Filed 7-23-92; 8:45 am]

BILLING CODE 3510-22-M

---

50 CFR Part 663

[Docket No. 920403-2103]

Pacific Coast Groundfish Fishery

AGENCY: National Marine Fisheries Service (NMFS), NOAA, Commerce.

ACTION: Emergency interim rule; extension of effective date.

SUMMARY: An emergency interim rule is in effect through July 21, 1992, which implemented management restrictions in the Pacific whiting fishery that are intended to minimize the impact of the

whiting fishery on Pacific salmon stocks. Because conditions warranting the emergency still exist, the Secretary of Commerce (Secretary) extends the emergency interim rule.

EFFECTIVE DATES: The effective date of the emergency interim rule published at 57 FR 14663 is extended from 0001 hours July 22, 1992, through 2400 hours October 19, 1992.

FOR FURTHER INFORMATION CONTACT: William L. Robinson at 206-526-6140, or Rodney R. McInnis at 310-980-4040.

SUPPLEMENTARY INFORMATION: Under section 305(c) of the Magnuson Fishery Conservation and Management Act (Magnuson Act), an emergency rule was implemented on April 16, 1992 (57 FR 14663) effective through July 21, 1992, containing management restrictions intended to minimize the impact of the whiting fishery on Pacific salmon. The restrictions prohibited: (1) At-sea processing of whiting south of 42° N. latitude; (2) directed fishing for whiting shoreward of the 100-fathom contour in the Eureka subarea (40°30'-43°00' N. latitude); (3) fishing for whiting between midnight and one-half hour after official sunrise; and (4) fishing for whiting in the Klamath and Columbia River Salmon Conservation Zones. These actions were taken because many Pacific salmon stocks appear to be at record low levels, and some stocks may not meet 1992 escapement goals.

The bycatch of salmon in the 1992 Pacific whiting fishery is at a very low level—about 0.01 salmon per metric ton in the at-sea processing fishery and 0.02 salmon per metric ton for shoreside deliveries of whiting. Bycatch levels are so low probably as a result of the bycatch restrictions imposed by the emergency rule, the low abundance of salmon, El Nino conditions, and voluntary efforts to avoid salmon. At this time, the emergency rule restrictions appear not to have posed an unreasonable burden on the whiting industry. Both at-sea and shoreside processing have occurred at record rates under these restrictions. Consequently, to continue to minimize the bycatch of salmon in the whiting fishery, the Secretary, under section 305(c)(3)(B) of the Magnuson Act, extends this emergency rule for an additional 90 days through October 19, 1992.

This emergency rule was recommended by the Pacific Fishery Management Council (Council) at its March 1992 meeting, and was intended to be extended for a second 90-day period in order to encompass the time period of the majority of the 1992 Pacific whiting fishery. The Council concurred with the extension of this emergency rule at its July 8-10 meeting.

The emergency interim rule is exempt from the normal review procedures of E.O. 12291 as provided in section 8(a)(1) of that order and was reported to the Director of the Office of Management and Budget with an explanation of why following procedures of that order is not possible.

List of Subjects in 50 CFR Part 663

Administrative practice and procedure, Fisheries, Fishing, Reporting and recordkeeping requirements.

Authority: 16 U.S.C. 1801 *et seq.*

Dated: July 21, 1992.

Samuel W. McKeen,

Acting Assistant Administrator for Fisheries National Marine Fisheries Service.

[FR Doc. 92-17515 Filed 7-21-92; 2:16 pm]

BILLING CODE 3510-22-M

---

50 CFR Part 675

[Docket No. 911172-2021]

Groundfish of the Bering Sea and Aleutian Islands Area

AGENCY: National Marine Fisheries Service (NMFS), NOAA, Commerce.

ACTION: Apportionment of reserve; request for comments.

SUMMARY: NMFS announces that amounts of the operational reserve are needed in the fishery for pollock in the Bering Sea subarea (BS) of the Bering Sea and Aleutian Islands management area (BSAI). This action is necessary to allow harvest of the total allowable catch (TAC) of pollock allocated to the inshore and offshore components in the BS.

EFFECTIVE DATES: Effective 12 noon, Alaska local time (A.l.t.), July 23, 1992, through 12 midnight, A.l.t., December 31, 1992. *Comments* are invited through August 7, 1992.

ADDRESSES: Comments should be sent to Ronald J. Berg, Chief, Fisheries Management Division, Alaska Region, National Marine Fisheries Service, P.O. Box 21668, Juneau, Alaska 99802-1668, or delivered to 9109 Mendenhall Mall Road, Federal Building Annex, suite 6, Juneau, Alaska.

FOR FURTHER INFORMATION CONTACT: Andrew N. Smoker, Resource Management Specialist, Fisheries Management Division, NMFS, 907-586-7228.

SUPPLEMENTARY INFORMATION: The groundfish fishery in the BSAI exclusive economic zone is managed by the Secretary of Commerce according to the Fishery Management Plan for the Groundfish Fishery of the BSAI (FMP) prepared by the North Pacific Fishery Management Council under authority of the Magnuson Fishery Conservation and Management Act. Fishing by U.S. vessels is governed by regulations implementing the FMP at 50 CFR parts 620 and 675.

The Director of the Alaska Region, NMFS (Regional Director), has determined, in accordance with § 675.20(b)(1)(i), that the initial TAC specified for pollock needs to be supplemented from the non-specific reserve in order to continue operations. Therefore, NMFS apportions 97,500 metric tons (mt) from the reserve to the pollock TAC in the BS, resulting in a revised BS pollock TAC of 1,202,500 mt. The revised amounts available in the second pollock season by the inshore and offshore components are 234,518 mt and 435,534 mt respectively, in accordance with § 675.20(a)(3)(i) and (ii).

Classification

This action is taken under 50 CFR 675.20 and is in compliance with E.O. 12291.

The Assistant Administrator for Fisheries, NOAA, finds for good cause that providing prior notice and public comment or delaying the effective date of this notice is impractical and contrary to the public interest. Without this apportionment, U.S. groundfish fishermen would have to discard bycatches of pollock in the BS, resulting in needless economic waste of valuable fishery resources. Under § 675.20(b)(2), interested persons are invited to submit written comments on this apportionment to the above address until August 7, 1992.

List of Subjects in 50 CFR Part 675

Fisheries, Reporting and recordkeeping requirements.

Authority: 16 U.S.C. 1801 *et seq.*

Dated: July 21, 1992.

David S. Crestin,

Acting Director, Office of Fisheries Conservation and Management, National Marine Fisheries Service.

[FR Doc. 92-17546 Filed 7-23-92; 8:45 am]

BILLING CODE 3510-22-M

Proposed Rules

Federal Register
Vol. 57, No. 143
Friday, July 24, 1992

This section of the FEDERAL REGISTER contains notices to the public of the proposed issuance of rules and regulations. The purpose of these notices is to give interested persons an opportunity to participate in the rule making prior to the adoption of the final rules.

SMALL BUSINESS ADMINISTRATION

13 CFR part 121

Small Business Size Regulations; Waiver of the Nonmanufacturer Rule

AGENCY: Small Business Administration.

ACTION: Notice of intent to waive the nonmanufacturer rule for printing paper.

SUMMARY: The Small Business Administration (SBA) is considering a waiver of the Nonmanufacturer Rule for printing paper. The basis for a waiver is that no small business manufacturers are supplying this class of products to the Federal government. The effect of a waiver would be to allow otherwise qualified regular dealers to supply the products of any domestic manufacturer on a Federal contract set aside for small businesses or awarded through the SBA 8(a) Program. The purpose of this notice is to solicit comments and source information from interested parties.

DATES: Comments and sources must be submitted on or before August 10, 1992.

ADDRESSES: Comments to: Robert J. Moffitt, Chairperson, Size Policy Board, U.S. Small Business Administration, 409 3rd Street SW., Washington DC, 20416, Tel: (202) 205-6460.

FOR FURTHER INFORMATION CONTACT: James Parker, Procurement Analyst, phone (703) 695-2435.

SUPPLEMENTARY INFORMATION: Public Law 100-656, enacted on November 15, 1988, incorporated into the Small Business Act the previously existing regulation that recipients of Federal contracts set aside for small businesses or SBA 8(a) Program procurement must provide the product of a small business manufacturer or processor, if the recipient is other than the actual manufacturer or processor. This requirement is commonly referred to as the Nonmanufacturer Rule. The SBA regulations imposing this requirement are found at 13 CFR 121.906(b) and 121.1106(b). Section 303(h) of the law provides for waiver of this requirement by SBA for any "class of products" for which there are no small business manufacturers or processors in the Federal market. To be considered available to participate in the Federal market on these classes of products, a small business manufacturer must have submitted a proposal for a contract solicitation or received a contract from the Federal government within the last 24 months. The SBA defines "class of products" based on two coding systems. The first is the office of Management and Budget Standard Industrial Classification Manual which establishes "SIC" codes. The second is the Product and Service Code ("PSC" code) established by the Federal Procurement Data System.

This notice proposes to waive the Nonmanufacturer Rule for printing paper (SIC code 2621, PSC code 7510). This class of products consists of, but is not restricted to, index, mimeograph, duplicating, and manifold paper.

In an effort to identify potential small business sources for this class of products, the Small Business Administration has searched its Procurement Automated Source System (PASS) and contacted the General Services Administration. No small business sources were identified as a result of these efforts. The public is, therefore, invited to comment or provide source information to SBA on the proposed waiver of the Nonmanufacturer Rule for printing paper products within SIC 2621 and PSC 7510.

Dated: July 17, 1992.

Robert J. Moffitt,

Chairman, Size Policy Board.

[FR Doc. 92-17501 Filed 7-23-92; 8:45 am]

BILLING CODE 8025-01-M

DEPARTMENT OF HEALTH AND HUMAN SERVICES

Social Security Administration

20 CFR Parts 404 and 416

[Regulations Nos. 4 and 16]

Federal Old-Age, Survivors, and Disability Insurance and Supplemental Security Income for the Aged, Blind and Disabled; Payments for Vocational Rehabilitation Services

AGENCY: Social Security Administration, HHS.

ACTION: Proposed rules.

SUMMARY: We propose to amend our regulations which govern our vocational rehabilitation (VR) payment programs under titles II and XVI of the Social Security Act (the Act). Our proposed rules would expand the use of private and public non-State VR providers in situations in which a State, through its VR agency, is unwilling to participate in our VR programs with respect to an individual whom we have referred to the State VR agency; ensure in appropriate cases that payment for VR services may be made only for those services which have a causal relationship to an individual's performance of substantial gainful activity (SGA) for a continuous period of 9 months; and prescribe the specific kinds of VR services for which payment would be made. The proposed amendments to our regulations are intended to make VR services more readily available to individuals under our VR payment programs and to improve the administration and cost effectiveness of these programs.

DATES: To be sure that your comments are considered, we must receive them no later than September 22, 1992.

ADDRESSES: Comments should be submitted in writing to the Commissioner of Social Security, Department of Health and Human Services, P.O. Box 1585, Baltimore, MD 21235, or delivered to the Office of Regulations, Social Security Administration, 3-B-1 Operations Building, 6401 Security Boulevard, Baltimore, MD 21235 between 8 a.m. and 4:30 p.m. on regular business days. Comments received may be inspected during these same hours by making arrangements with the contact person shown below.

FOR FURTHER INFORMATION CONTACT: Jack Schanberger, Legal Assistant, 3-B-1 Operations Building, 6401 Security Boulevard, Baltimore, MD 21235, (410) 965-8471.

SUPPLEMENTARY INFORMATION: These proposed rules would amend our regulations at § 404.2101 *et seq.* and § 416.2201 *et seq.* which prescribe the rules for the title II and title XVI VR payment programs under sections 222(d) and 1615(d) of the Act. In general, sections 222(d) and 1615(d) of the Act authorize the Secretary of Health and Human Services (the Secretary) to use

the title II trust funds and the title XVI general fund to reimburse a State for the reasonable and necessary costs of VR services provided to a title II disability beneficiary or title XVI disability or blindness recipient, respectively, in three categories of cases. Specifically, these sections permit payment for VR services furnished to such beneficiaries or recipients in cases where: (1) The furnishing of such services results in the individual's performance of SGA for a continuous period of nine months; (2) the individual is continuing to receive benefits, despite his or her medical recovery, under section 225(b) or 1631(a)(6) of the Act because of his or her participation in a VR program; or (3) the individual, without good cause, refused to continue to accept VR services or failed to cooperate in such a manner as to preclude his or her successful rehabilitation. Payment may be made for the reasonable and necessary costs of VR services provided in these cases as determined in accordance with criteria established by the Commissioner of Social Security (the Commissioner).

Sections 222(d) and 1615(d) of the Act permit payment to a State for VR services if the services are provided by a State VR agency, i.e., an agency administering a State plan for VR services approved under title I of the Rehabilitation Act of 1973, as amended. However, in the case of a State which is unwilling to participate or does not have such a plan for VR services, section 222(d)(2) of the Act authorizes the Commissioner to enter into agreements or contracts with alternative VR service providers (alternate participants) for the purpose of providing VR services to disability beneficiaries under the title II VR payment program under the same conditions that would apply to a State VR agency. While section 1615(d) of the Act is silent with regard to alternate participants, section 1633(a) of the Act provides authority for using alternate participants under the title XVI VR payment program inasmuch as the latter section gives the Secretary the authority to make administrative and other arrangements under title XVI in the same manner as they are made under title II. Moreover, the legislative history of section 1615(d) indicates that Congress intended the title XVI VR payment program to parallel the title II program. Our existing title II and title XVI regulations, therefore, contain virtually identical provisions for the title II and title XVI VR payment programs.

When we first published final regulations to implement sections 222(d) and 1615(d) of the Act on February 10, 1983, at 48 FR 6286, we indicated that we would reexamine the provisions of the regulations and consider possible changes after we had gained experience administering the title II and title XVI VR payment programs. Certain recommendations contained in the March 1988 Report of the Disability Advisory Council also suggested a need to consider new approaches to these programs to increase the availability of VR services for disabled or blind beneficiaries and recipients and to ensure that such beneficiaries and recipients are provided with those services that are necessary to achieve and maintain employment.

The basic purpose of the title II and title XVI VR payment programs is twofold: (1) To make VR services more readily available to disabled or blind beneficiaries and recipients; and (2) to achieve savings for the title II trust funds and the title XVI general fund. To promote these objectives more effectively, we propose to amend our existing regulations to provide for greater use of alternate participants under the VR payment programs and to improve the administration and cost effectiveness of the programs so as to ensure that savings will accrue to the trust funds and the general fund.

None of the provisions in this amendment to the Vocational Rehabilitation regulations is a major departure from the current program. The changes are meant to address the most significant criticisms of the SSA VR program. By expanding the opportunity for private VR providers to participate in the program, we are responding to the recommendations of the 1988 Disability Advisory Counsel, and the dictates of Congress. By permitting reimbursement of providers only for services which have a causal connection to the individual's completion of nine months of SGA, we are responding to criticisms by GAO and the HHS Inspector General. The IG stated in his most recent and thorough report on SSA's VR program, "SSA should strengthen the linkage between the SSA vocational rehabilitation payment program and actions to . . . rehabilitate SSA clients."

Use of Alternate Participants

The proposed regulations revise §§ 404.2104 and 416.2204 to provide for the use of alternate participants in cases where a State VR agency declines to provide VR services to a disabled or blind beneficiary or recipient whom we referred to the State VR agency. The proposed regulations provide that in such cases, the State will be considered unwilling to participate through its VR agency with respect to such individual.

When we first published regulations for the VR payment programs, we provided in §§ 404.2104 and 416.2204 that the option of participating through their VR agencies would be offered first to the States and that a State had to notify us within 60 days after publication of the regulations whether it intended to participate through its VR agency(ies). All of the States chose to participate.

Current §§ 404.2104 and 416.2204 also give a State the option of not participating, including termination of participation, or of limiting the scope of its participation. If a State decides not to participate or to limit participation, the existing regulations provide that we may arrange for VR series through an alternate participant for disabled or blind beneficiaries or recipients in the State or, where the State has limited its participation, for those beneficiaries and recipients not included within the scope of the State's participation. While we propose to make certain technical changes to the rules concerning a State's option not to participate or to limit participation, the current provisions relating to these options would remain substantially the same under the proposed regulations. However, while current §§ 404.2104 and 416.2204 provide each State the option of declaring its intent to participate with respect to the title II or title XVI VR payment program as a whole, proposed §§ 404.2104 and 416.2204 would afford each State the opportunity to participate through its VR agency(ies) with respect to disabled title II beneficiaries in that State, or disabled or blind title XVI recipients in that State, on a case-by-case basis, unless the State has notified us in advance of its decision not to participate or to limit participation.

Under proposed §§ 404.2104 and 416.2204, unless the State has exercised its option not to participate or to limit participation through its VR agency(ies), we will provide the State the opportunity to participate with respect to disabled or blind beneficiaries or recipients in the State by referring such individuals first to the State VR agency(ies) for necessary VR services. The proposed regulations would require the State to declare, through the State VR agency, whether it is willing to participate with respect to a beneficiary or recipient whom we referred to that VR agency. Under the proposed regulations, the State may participate with respect to such an individual only if the State VR agency decides to accept the individual as a client for VR services and notifies us in writing within a prescribed time period of such decision.

Proposed §§ 404.2104 and 416.2204 provide that the notice must be received by the appropriate Social Security Administration (SSA) Regional Commissioner no later than the close of the third month following the month in which we referred the individual to the State VR agency. If we do not receive such notice with respect to such individual within the prescribed time period, we will consider the State unwilling to participate with respect to such individual and may arrange for VR services for the individual through an alternate participant. These provisions also would apply with respect to the class(es) of disabled or blind beneficiaries or recipients whom we refer to a State VR agency in a case in which a State has decided to limit participation of its VR agency(ies) to such class(es) of beneficiaries or recipients.

Minimum Qualifications for Alternate Participants

Because the proposed changes to §§ 404.2104 and 416.2204 would provide for greater use of alternate participants under the title II and title XVI VR payment programs, we propose to add new §§ 404.2106 and 416.2206 to our regulations to specify certain minimum qualifications for alternate participants (that is, any for-profit or not-for-profit agency, organization, institution, or individual, other than a State VR agency). Current §§ 404.2104(a) and 416.2204(a) provide that an alternate participant must have a plan for VR services that is similar to a State plan approved under title I of the Rehabilitation Act of 1973, as amended. The proposed regulations would not change this basic requirement. However, proposed §§ 404.2106 and 416.2206 would clarify that the plans or alternate participants must provide, among other things, that the provision of VR services to disabled or blind beneficiaries or recipients will meet certain minimum standards. Proposed §§ 404.2106 and 416.2206 also explain that we will use as alternate participants only those VR service providers that are licensed, certified, accredited or registered, as appropriate, in the State in which they provide VR services.

Payments to Alternate Participants

Our existing regulations provide that payments to alternate participants for VR services furnished to beneficiaries or recipients will be made under the same terms and conditions that apply to State VR agencies. The proposed regulations would not change this requirement.

Requirements for Payment

We propose to amend §§ 404.2108 and 416.2208 to specify the information that the State VR agency or alternate participant must provide in order to claim and receive payment under our VR payment programs. The proposed regulations would provide that each claim for payment be submitted on a form prescribed by us and contain the following information: a description of each service provided; a statement of when the service was provided; the cost of the service; and, as appropriate, an explanation of how the service contributed to an individual's performance of a continuous 9-month period of SGA or if payment is being requested for services provided to an individual described in § 404.2101 (b) or (c) or § 416.2201 (b) or (c), an explanation of how the service was reasonably expected to assist or motivate an individual to return to, or continue in, SGA.

We realize that the requirements to provide this specific information on each claim for payment may result in an additional administrative burden for some State VR agencies, and we request your consideration of and comments on possible solutions.

The proposed rules also would amend §§ 404.2108 and 416.2208 to provide that the State VR agency or alternate participant must maintain, and provide as we may require, adequate documentation of all services and costs for all disabled or blind beneficiaries or recipients with respect to whom a State VR agency or alternate participant could potentially request payment for services and costs under our VR payment programs.

VR Services Contributing to a Continuous Period of SGA

The proposed regulations would also amend §§ 404.2111 and 416.2211 which provide the criteria for determining when VR services will be considered to have contributed to a continuous period of 9 months of SGA. We propose to amend §§ 404.2111(a)(1) and 416.2211(a)(1) to provide that any VR services which significantly motivated or assisted the individual in returning to, or continuing in, SGA will be considered to have contributed to the continuous 9-month period of SGA in the situation where the individual does not recover medically and the continuous 9-month period of SGA begins 1 year or less after VR services end. We are proposing to delete the words "might have" before the phrase "significantly motivated or assisted" in these current regulatory sections to strengthen the causal relationship between the VR services and the continuous period of SGA.

We propose to make certain other changes to §§ 404.2111 and 416.2211 to clarify that these sections permit payment only for those VR services that contribute to an individual's performance of a continuous period of SGA.

Refusal of VR Services

We propose to amend §§ 404.2113 and 416.2213 to include a timeframe within which State VR agencies and alternate participants are to report cases of VR refusal. These are cases in which an individual refuses to continue to accept VR services or fails to cooperate in such a manner as to preclude his or her successful rehabilitation.

Services for Which Payment May Be Made

Under section 222(d)(5) of the Act, the Secretary may limit the type, scope, or amount of VR services that are subject to payment in accordance with regulations designed to achieve the purpose of section 222(d). In general, current §§ 404.2114 and 416.2214 permit payment for evaluation services and all services provided by a State VR agency under an individualized written rehabilitation program (IWRP) or by an alternate participant under a similar document. Consistent with section 222(d)(5) of the Act, we propose to revise §§ 404.2114 and 416.2214 to describe the specific kinds of VR services for which payment may be made in all three categories of cases under the VR payment programs. Under the proposed rules, VR services for which payment may be made would include only those services described in proposed §§ 404.2114(b) and 416.2214(b). In addition, these services would be subject to payment only if: (1) The services are necessary to determine an individual's eligibility for VR services; or (2) the services are provided under an IWRP, or under a similar document in the case of an alternate participant, and could reasonably be expected to motivate or assist the individual in returning to, or continuing in, SGA.

Cost Containment

We propose to amend §§ 404.2117 and 416.2217 to require, rather than to expect, State VR agencies and alternate participants to seek payment or services from other sources in accordance with the "similar benefit" provisions under 34 CFR part 361. The proposed rules also would provide that the cost incurred for VR services must comply with the cost-containment policies of the State VR

agency established under 34 CFR part 361 or, in the case of an alternate participant, with similar written policies established under a negotiated plan in accordance with a written agreement or contract between us and the alternate participant. These cost-containment policies must provide guidelines to ensure the lowest reasonable cost for VR services while allowing flexibility to provide for an individual's needs. Under the proposed rules, a State VR agency or alternate participant would be required to maintain and use these cost-containment policies to govern the costs incurred for all VR services for which payment would be requested under the VR payment programs. The proposed rules also would require that, before the end of the first calendar quarter of each year, the State VR agency or alternate participant send to us a written summary of the written cost-containment policies and, when requested, copies of specific written policies and procedures (e.g., any guidelines and fee schedules for a given year).

Validation Reviews

We propose to revise and expand §§ 404.2121 and 416.2221 which currently provide for postpayment reviews of claims submitted by State VR agencies or alternate participants for payment under our regulations. Under the proposed rules, we would institute a validation review of a sample of claims filed by each State VR agency or alternate participant. Validation reviews may be conducted prior to or after payment is made.

The purpose of these validation reviews is to ensure that the VR services and costs meet the requirements for payment under our regulations, to assess the validity of our documentation requirements, and to assess the need for additional validation reviews or additional documentation requirements for any State VR agency or alternate participant to ensure compliance with the requirements under this subpart.

In any validation review, we would determine the amount of payment and would notify the State VR agency or alternate participant of our determination. In any postpayment validation review, if we find that we have paid more or less than the correct amount, we will determine that there is an overpayment or underpayment and will notify the State VR agency or alternate participant that we will make the appropriate adjustment. In any case, if a State agency or alternate participant disagrees with our determination, it may appeal our determination. The proposed regulations would not change the current rules set out in §§ 404.2127 and 416.2227 for appealing determinations or resolving disputes under the VR payment programs.

Other Changes

We also propose to make certain changes to §§ 404.2102 and 416.2202, 404.2108 and 416.2208, and 404.2109 and 416.2209 to conform to the proposed changes to the other sections of the regulations, discussed above.

Fee-Schedule Mechanism—Request for Comments

In addition, we are interested in exploring ways to simplify and speed the payment process under our VR payment programs. Therefore, we request comments on the desirability and the feasibility of SSA establishing an experience-based fee schedule mechanism as a means for achieving a simplified payment process, while fairly representing costs incurred.

Regulatory Procedures

Executive Order 12291

The Secretary has determined that these are not major rules under Executive Order 12291.

We expect that these regulations would be at least cost-neutral over time. While it is not yet possible to present realistic estimates, the expectation is that the program savings from the additional successful rehabilitations and resultant benefit terminations would exceed any additional administrative costs, including the cost of providing VR evaluations and services.

Nevertheless, it is clear that the potential exists for VR reimbursement costs to increase, even if they are later offset by benefit savings. If the current workload of claims for successful rehabilitations were to increase, the annual cost in VR reimbursements would be an additional $4.7 million for each 1000 claims submitted. In its 1988 report, the Disability Advisory Council estimated that the trust funds save at least $4 for each $1 spent. Using that as a basis, savings to the trust funds could increase by $18.8 million for each additional 1000 claims.

Because these regulations do not meet any of the threshold criteria for a major rule, a regulatory impact analysis is not required.

Paperwork Reduction Act

These proposed rules contain information collection requirements. The requirements in proposed § 404.2108 (b) and (f) and in proposed § 416.2208 (b) and (f), which deal with claims for reimbursement for vocational rehabilitation (VR) services, already have partial clearance by the Office of Management and Budget (OMB) under OMB No. 0960-0310 (form SSA-199; State Vocational Rehabilitation Agency Claim). However, these sections expand the requirements of the current regulations to provide for the collection of additional information. Also, the proposed changes to §§ 404.2104, 404.2117, 416.2204 and 416.2217 contain new reporting requirements.

As required by section 2(a) of the Paperwork Reduction Act of 1980, 44 U.S.C. 3504(h), we will submit a copy of these proposed rules to OMB for its review of these new information collection requirements. Other organizations and individuals desiring to submit comments on these information collection requirements should direct them to the Office of Information and Regulatory Affairs, OMB, New Executive Office Building, room 3208, Washington, DC 20503, ATTENTION: Desk Officer of HHS.

Public reporting burden for these proposed collections of information is estimated as follows according to the section of the proposed rule:

- §§ 404.2104 and 416.2204—60 minutes per response times 960 responses yearly=960 hours;
- §§ 404.2108 and 416.2208—22 minutes per response times 12,000 responses yearly=4,400 hours (NOTE: The burden shown here is in addition to that already approved by OMB);
- §§ 404.2113 and 416.2213—No additional burden;
- §§ 404.2217 and 416.2217—24 hours per response for the first year times 80 responses=1,920 hours; thereafter, responses are estimated to take 12 hours, so the annual burden is estimated to be 960 hours in subsequent years.

These burden estimates include the time it will take to read the instructions, gather the necessary facts, and fill out the forms, if any. If you have any comments or suggestions on these estimates, write to the Social Security Administration, Attn: Reports Clearance Officer, 1-A-21 Operations Building, 6401 Security Boulevard, Baltimore, MD 21235, and to the Office of Management and Budget, Paperwork Reduction Project (0960-NEW), Washington, DC 20503.

Regulatory Flexibility Act

We certify that these regulations, if promulgated, will not have a significant economic impact on a substantial number of small entities. Therefore, a regulatory flexibility analysis as

provided in Public Law 96-354, the Regulatory Flexibility Act of 1980, is not required.

The proposed regulations would apply to States and certain alternate providers of VR services which are willing to provide services to disabled or blind beneficiaries or recipients under our VR payment programs under the conditions specified in the regulations. While the proposed changes to the regulations would permit us to make greater use of alternate participants under these programs, the proposed rules would not impose any significant economic burdens on these alternate VR service providers which may be small entities. Under the Act, we may arrange for VR services for beneficiaries or recipients by agreement or contract with alternate VR service providers where the State is unwilling to participate or does not have an appropriate plan for VR services. The Act requires that the provision of VR services by alternate participants, and the payment to alternate participants for such services, shall be subject to the same conditions that would apply to the States. Our current regulations provide that an alternate participant must have a plan for VR services that is similar to an appropriate State plan. The proposed regulations would not change this requirement but would clarify that the plans of alternate participants, like a State plan for VR services, must ensure, among other things, that the provision of VR services will meet certain minimum standards. The proposed rules also clarify that we would not enter into a written agreement or contract with a private or other non-State VR provider to serve as an alternate participant unless such provider meets certain basic qualifications. The proposed regulations would not require private or other non-State VR providers to participate in the VR payment programs. Rather, the proposed rules would increase the opportunity for these providers to participate in these programs if they wish to do so.

(Catalog of Federal Domestic Assistance Programs Nos. 93.802, Disability Insurance; 93.807, Supplemental Security Income Program)

List of Subjects

20 CFR Part 404

Administrative Practice and Procedure, Death benefits, Disability benefits, Old-Age, Survivors and Disability Insurance, Reporting and recordkeeping requirements.

20 CFR Part 416

Administrative Practice and Procedure, Aged, Blind, and Disability benefits, Public assistance programs, Reporting and recordkeeping requirements, Supplemental Security Income (SSI).

Dated: December 9, 1991.

Gwendolyn S. King,

Commissioner of Social Security.

Approved: March 6, 1992.

Louis W. Sullivan,

Secretary of Health and Human Services.

For the reasons set out in the preamble, parts 404 and 416 of chapter III of title 20, Code of Federal Regulations, is amended as set forth below.

PART 404—FEDERAL OLD-AGE, SURVIVORS AND DISABILITY INSURANCE (1950-)

20 CFR part 404, subpart V, is amended as follows:

1. The authority citation for subpart V of part 404 continues to read as follows:

Authority: Secs. 205(a), 222, and 1102 of the Social Security Act; 42 U.S.C. 405(a), 422, and 1302.

2. Section 404.2102 is amended by revising paragraph (b), by redesignating paragraphs (c) through (n) as paragraphs (d) through (o), by adding a new paragraph (c), and by revising redesignated paragraphs (e) and (l) to read as follows:

§ 404.2102 Purpose and scope.

* * * * * *

(b) Section 404.2104 explains how State VR agencies or alternate participants may participate in the payment program under this subpart.

(c) Section 404.2106 describes the basic qualifications for alternate participants.

* * * * * *

(e) Sections 404.2110 through 404.2111 describe when an individual has completed a continuous period of SGA and when VR services will be considered to have contributed to that period.

* * * * * *

(l) Sections 404.2120 and 404.2121 describe the audits and the prepayment and postpayment validation reviews we will conduct.

* * * * * *

3. Section 404.2104 is revised to read as follows:

§ 404.2104 Participation by State VR agencies or alternate participants.

(a) *General.* In order to participate in the payment program under this subpart through its VR agency(ies), a State must have a plan which meets the requirements of title I of the Rehabilitation Act of 1973, as amended. An alternate participant must have a similar plan and otherwise qualify under § 404.2106.

(b) *Participation by States.* (1) The opportunity to participate through its VR agency(ies) with respect to disability beneficiaries in the State will be offered first to the State in accordance with paragraph (c) of this section, unless the State has notified us in advance under paragraph (e)(1) of this section of its decision not to participate or to limit such participation.

(2) A State with one or more approved VR agencies may choose to limit participation of those agencies to a certain class(es) of disability beneficiaries. For example, a State with separate VR agencies for the blind and disabled may choose to limit participation to the VR agency for the blind. In such a case, we would give the State, through its VR agency for the blind, the opportunity to participate with respect to blind disability beneficiaries in the State in accordance with paragraph (d) of this section. We would arrange for VR services for non-blind disability beneficiaries in the State through an alternate participant(s). A State that chooses to limit participation of its VR agency(ies) must notify us in advance under paragraph (e)(1) of this section of its decision to limit such participation.

(3) If a State chooses to participate by using a State agency other than a VR agency with a plan for VR services approved under title I of the Rehabilitation Act of 1973, as amended, that State agency may participate only as an alternate participant.

(c) *Opportunity for participation through State VR agencies.* (1) Unless a State has decided not to participate or to limit participation, we will give the State the opportunity to participate through its VR agency(ies) with respect to disability beneficiaries in the State VR agency(ies) for necessary VR services. A State, through its VR agency(ies), may participate with respect to any beneficiary so referred by accepting the beneficiary as a client for VR services and notifying us under paragraph (c)(2) of this section of such acceptance.

(2) In order for the State to participate with respect to a disability beneficiary whom we referred to a State VR agency, the State VR agency must notify the appropriate Regional Commissioner (SSA) in writing of its decision to accept the beneficiary as a client for VR services. The notice must be received by the appropriate Regional Commissioner (SSA) no later than the close of the third month following the month in which we referred the beneficiary to the State VR agency. If we do not receive such notice

with respect to a beneficiary whom we referred to the State VR agency, we may arrange for VR services for that beneficiary through an alternate participant.

(d) *Opportunity for limited participation through State VR agencies.* If a State has decided under paragraph (e)(1) of this section to limit participation of its VR agency(ies) to a certain class(es) of disability beneficiaries in the State, we will give the State the opportunity to participate with respect to such class(es) of disability beneficiaries by referring such beneficiaries first to the State VR agency(ies) for necessary VR services. The State, through its VR agency(ies), may participate with respect to any beneficiary so referred by accepting the beneficiary as a client for VR services and notifying us under paragraph (c)(2) of this section of such acceptance.

(e) *Decision of a State not to participate or to limit participation.* (1) A State may choose not to participate through its VR agency(ies) with respect to any disability beneficiaries in the State, or it may choose to limit participation of its VR agency(ies) to a certain class(es) of disability beneficiaries in the State. A State which decides not to participate or to limit participation must provide advance written notice of that decision to the appropriate Regional Commissioner (SSA). Unless a State specifies a later month, a decision not to participate or to limit participation will be effective beginning with the third month following the month in which the notice of the decision is received by the appropriate Regional Commissioner (SSA). The notice of the State decision must be submitted by an official authorized to act for the State for this purpose. A State must provide to the appropriate Regional Commissioner (SSA) an opinion from the State's Attorney General verifying the authority of the official who sent the notice to act for the State. This opinion will not be necessary if the notice is signed by the Governor of the State.

(2) (i) If a State has decided not to participate through its VR agency(ies), we may arrange for VR services through an alternate participant(s) for disability beneficiaries in the State.

(ii) If a State has decided to limit participation of its VR agency(ies) to a certain class(es) of disability beneficiaries, we may arrange for VR services through an alternate participant(s) for the class(es) of disability beneficiaries in the State excluded from the scope of the State's participation.

(3) A State which has decided not to participate or to limit participation may participate later through its VR agency(ies) in accordance with paragraph (c) of this section, provided that such participation will not conflict with any previous commitment which we may have made to an alternate participant(s) under paragraph (e)(2) of this section. A State which decides to resume participation under paragraph (c) of this section must provide advance written notice of that decision to the appropriate Regional Commissioner (SSA). Unless a commitment to an alternate participant(s) requires otherwise, a decision of a State to resume participation under paragraph (c) of this section will be effective beginning with the third month following the month in which the notice of the decision is received by the appropriate Regional Commissioner (SSA) or, if later, with a month specified by the State. The notice of the State decision must be submitted by an official authorized to act for the State as explained in paragraph (e)(1) of this section.

(f) *Use of alternate participants.* The Commissioner, by written agreement or contract, may arrange for VR services through an alternate participant(s) for any disability beneficiary in the State with respect to whom the State is unwilling to participate through its VR agency(ies.). In such a case, we may refer the beneficiary to such alternate participant for necessary VR services. The Commissioner will find that a State is unwilling to participate with respect to any of the following disability beneficiaries in that State:

(1) A disability beneficiary whom we referred to a State VR agency under paragraph (c) or (d) of this section if we do not receive a notice within the stated time period under paragraph (c)(2) of this section of a decision by the VR agency to accept the beneficiary as a client for VR services;

(2) The class(es) of disability beneficiaries excluded from the scope of the State's participation if the State has decided to limit participation of its VR agency(ies); and

(3) All disability beneficiaries in the State if the State has decided not to participate through its VR agency(ies).

4. A new § 404.2106 is added to read as follows:

§ 404.2106 Basic qualifications for alternate participants.

(a) *General.* We may arrange for VR services through an alternate participant by written agreement or contract as explained in § 404.2104(f). An alternate participant may be a public or private agency, organization, institution or individual (that is, any entity whether for-profit or not-for-profit), other than a State agency.

(1) An alternate participant must—

(i) Be licensed, certified, accredited, or registered, as appropriate, to provide VR services in the State in which it provides services; and

(ii) Under the terms of the written contract or agreement, have a plan similar to the State plan described in § 404.2104(a) which shall govern the provision of VR services to individuals.

(2) We will not use as an alternate participant any agency, organization, institution, or individual—

(i) Whose license, accreditation, certification, or registration is suspended or revoked for reasons concerning professional competence or conduct or financial integrity;

(ii) Who has surrendered such license, accreditation, certification, or registration pending a final determination of a formal disciplinary proceeding; or

(iii) Who is precluded from Federal procurement or nonprocurement programs.

(b) *Standards for the provision of VR services.* An alternate participant's plan must provide, among other things, that the provision of VR services to individuals will meet certain minimum standards, including, but not limited to, the following:

(1) All medical and related health services furnished will be prescribed by, or provided under the formal supervision of, persons licensed to prescribed or supervise the provision of these services in the State;

(2) Only qualified personnel and rehabilitation facilities will be used to furnish VR services; and

(3) No personnel or rehabilitation facility described in paragraph (a)(2) (1), (ii), or (iii) of this section will be used to provide VR services.

5. Section 404.2108 is amended by redesignating paragraphs (b) through (f) as (c) through (g), by adding a new paragraph (b), and by revising redesignated paragraphs (d) and (f) to read as follows:

§ 404.2108 Requirements for payment.

* * * * *

(b) The claim for payment must be in a form prescribed by us and contain the following information:

(1) a description of each service provided;

(2) when the service was provided;

(3) the cost of the service; and

(4)(i) for claims for cases which are described in § 404.2101(a), a clear

explanation of how the service contributed to the individual's performance of a continuous 9-month period of SGA; or

(ii) for claims for cases described in § 404.2101(b) or (c), a clear explanation of how the service was reasonably expected to motivate or assist the individual to perform SGA;

* * * * *

(d) The VR services for which payment is being requested must have been provided under a State plan for VR services approved under title I of the Rehabilitation Act of 1973, as amended, or, in the case of an alternate participant, under a negotiated plan, and must be services that are described in § 404.2114;

* * * * *

(f) The State VR agency or alternate participant must maintain, and provide as we may require, adequate documentation of all services and costs for all disability beneficiaries with respect to whom a State VR agency or alternate participant could potentially request payment for services and costs under this subpart; and

* * * * *

6. Section 404.2109 is amended by revising paragraph (c), by removing the word "and" at the end of paragraph (f), by redesignating paragraph (g) as paragraph (h), and by adding a new paragraph (g) to read as follows:

§ 404.2109 Responsibility for making payment decisions.

* * * * *

(c) Whether an individual, without good cause, refused to continue to accept VR services or failed to cooperate in a VR program for a month(s) after October 1984, and whether deductions should be imposed against the individual's disability benefits;

* * * * *

(g) Whether a VR service is a service described in § 404.2114; and

* * * * *

7. Section 404.2111 is amended by revising the introductory text of the section, by revising paragraphs (a)(1) and (a)(2), and by revising the introductory text of paragraph (b)(1) to read as follows:

§ 404.2111 Criteria for determining when VR services will be considered to have contributed to a continuous period of 9 months.

The State VR agency or alternate participant may be reimbursed for VR services if such services contribute to the individual's performance of a continuous 9-month period of SGA. The following criteria apply to individuals who received more than just evaluation services. If a State VR agency or alternate participant claims payment for services to an individual who received only evaluation services, it must establish that the individual's continuous period or medical recovery (if medical recovery occurred before completion of a continuous period) would not have occurred without the services provided. In applying the criteria below, we will consider services described in § 404.2114 that were initiated, coordinated or provided, including services before October 1, 1981.

(a) * * *

(1) *One year or less.* Any VR services which significantly motivated or assisted the individual in returning to, or continuing in, SGA will be considered to have contributed to the continuous period.

(2) *More than one year.* (i) If the continuous period was preceded by transitional work activity (employment or self-employment which gradually evolved, with or without periodic interruption, into SGA), and that work activity began less than a year after VR services ended, any VR services which significantly motivated or assisted the individual in returning to, or continuing in, SGA will be considered to have contributed to the continuous period.

(ii) If the continuous period was not preceded by transitional work activity that began less than a year after VR services ended, VR services will be considered to have contributed to the continuous period only if it is reasonable to conclude that the work activity which constitutes a continuous period could not have occurred without the VR services (e.g., training).

(b) *Continuous period with medical recovery occurring before completion.* (1) If an individual medically recovers before a continuous period has been completed, VR services under paragraph (a) of this section will not be payable unless some VR services contributed to the medical recovery. VR services will be considered to have contributed to the medical recovery if—

* * * * *

8. Section 404.2113 is revised to read as follows:

§ 404.2113 Payment for VR services in a case of VR refusal.

(a) For purposes of this section, VR refusal means an individual's refusal to continue to accept VR services or failure to cooperate in such a manner as to preclude the individual's successful rehabilitation.

(b) No later than the 60th day after the State VR agency or alternate participant makes a preliminary finding that an individual refuses to continue to accept VR services or fails to cooperate in a VR program, the State VR agency or alternate participant shall report to the appropriate Regional Commissioner (SSA) in writing such individual's VR refusal so that we may make the determination described in § 404.2109(c).

(c) Payment can be made to a State VR agency or alternate participant for the costs of VR services provided to an individual who, after filing an application with the State VR agency or alternate participant for rehabilitation services, without good cause, refuses to continue to accept VR services or fails to cooperate in such a manner as to preclude the individual's successful rehabilitation. A State VR agency or alternate participant may be paid, subject to the provisions of this subpart, for the costs of VR services provided to an individual if deductions have been imposed against the individual's monthly disability benefits for a month or months after October 1984 because of VR refusal.

9. Section 404.2114 is revised to read as follows:

§ 404.2114 Services for which payment may be made.

(a) *General.* Payment may be made for VR services provided by a State VR agency in accordance with title I of the Rehabilitation Act of 1973, as amended, or by an alternate participant under a negotiated plan, subject to the limitations and conditions in this subpart. VR services for which payment may be made under this subpart include only those services described in paragraph (b) of this section which are—

(1) Necessary to determine an individual's eligibility for VR services; or

(2) Provided by a State VR agency under an IWRP, or by an alternate participant under a similar document, but only if the services could reasonably be expected to motivate or assist the individual in returning to, continuing in, SGA.

(b) *Specific services.* Payment may be made under this subpart only for the following VR services:

(1) Evaluation of vocational rehabilitation potential, including diagnostic and related services incidental to determine—

(i) The nature and extent of the physical or mental impairment(s) and the resultant impact on the individual's employability;

(ii) The likelihood that an individual will benefit from vocational rehabilitation services in terms of employability; and

(iii) An employment goal consistent with the capacities of the individual and employment opportunities;

(2) Counseling and guidance, including personal adjustment counseling, and those referrals necessary to help a disabled individual secure needed services from other agencies;

(3) Physical and mental restoration services necessary to correct or substantially modify a physical or mental condition which is stable or slowly progressive and which constitutes a barrier to suitable employment at the SGA level;

(4) Vocational and other training services, including personal and vocational adjustment, books, tools, and other training materials, except that training or training services in institutions of higher education will be covered under this section only if maximum efforts have been made by the State VR agency or alternate participant to secure grant assistance in whole or in part from other sources;

(5) Maintenance expenses that are extra living expenses over and above the individual's normal living expenses and that are incurred solely because of the individual's participation in the VR program and that are necessary in order for the individual to benefit from other necessary VR services;

(6) Travel and related expenses necessary to transport an individual for purpose of enabling the individual's participation in other necessary VR services;

(7) Services to family members of a disabled individual only if necessary to the successful vocational rehabilitation of that individual;

(8) Interpreter services and note-taking services for a deaf individual and tactile interpreting for a deaf-blind individual;

(9) Reader services, rehabilitation teaching services, not-taking services, and orientation and mobility services for a blind individual;

(10) Telecommunications, sensory, and other technological aids and devices;

(11) Placement in suitable employment;

(12) Post-employment services necessary to maintain or regain other suitable employment at the SGA level;

(13) Occupational licenses, tools, equipment, initial stocks, and supplies;

(14) Rehabilitation engineering services; and

(15) Other goods and services that can reasonably be expected to motivate or assist the individual in returning to, or continuing in, SGA.

10. Section 404.2117 is amended by revising the introductory text of the section and by revising paragraphs (b) and (c) to read as follows:

§ 404.2117 What costs will be paid.

In accordance with section 22(d) of the Social Security Act, the Secretary will pay the State VR agency or alternate participant for the VR services described in § 404.2114 which were provided during the period described in § 404.2115 and which meet the criteria in § 404.2111, § 404.2112, or § 404.2113, but subject to the following limitations:

* * * * *

(b) The cost must not have been paid or be payable from some other source. For this purpose, State VR agencies or alternate participants will be required to seek payment or services from other sources in accordance with the "similar benefit" provisions under 34 CFR Part 361, including making maximum efforts to secure grant assistance in whole or part from other sources for training or training services in institutions of higher education. Alternate participants will not be required to consider State VR services a similar benefit.

(c) (1) The cost must be reasonable and necessary, in that it complies with the written cost-containment policies of the State VR agency established under 34 CFR Part 361 or, in the case of an alternate participant, it complies with similar written policies established under a negotiated plan. A cost which complies with these policies will be considered necessary only if the cost is for a VR service described in § 404.2114. The State VR agency or alternate participant must maintain and use these cost-containment policies, including any reasonable and appropriate fee schedules, to govern the costs incurred for all VR services, including the rates of payment for all purchased services, for which payment will be requested under this subpart. For the purpose of this subpart, the written cost-containment policies must provide guidelines designed to ensure—

(i) The lowest reasonable cost for such services; and

(ii) Sufficient flexibility so as to allow for an individual's needs.

(2) The State VR agency or alternate participant shall submit to us before the end of the 1st calendar quarter of each year a written summary of its cost-containment policies and, when requested by us, shall submit a copy(ies) of its specific written policies and procedures (e.g., any guidelines and fee schedules for a given year).

* * * * *

11. Section 404.2121 is revised to read as follows:

§ 404.2121 Validation reviews.

(a) *General.* We will conduct a validation review of a sample of the claims for payment filed by each state VR agency or alternate participant. We may conduct these reviews either on a prepayment or postpayment basis. We may review a specific claim, a larger sample of the claims, or all of the claims filed by any State VR agency or alternate participant, if we determine that such review is necessary to ensure compliance with the requirements of this subpart. For each claim selected for review, the State VR agency or alternate participant must submit such records of the VR services and costs for which payment has been requested or made under this subpart, or copies of such records, as we may require to ensure that the services and costs meet the requirements or payment. The State VR agency or alternate participant shall permit us (including duly authorized representatives) access to, and the right to examine, any records relating to such services and costs. Any review performed under this section will not be considered an audit for purposes of this subpart.

(b) *Purpose.* The primary purpose of these reviews is—

(1) To ensure that the VR services and costs meet the requirements for payment under this subpart;

(2) To assess the validity of our documentation requirements; and

(3) To assess the need for additional validation reviews or additional documentation requirements for any State VR agency or alternate participant to ensure compliance with the requirements under this subpart.

(c) *Determinations.* In any validation review, we will determine whether the VR services and costs meet the requirements for payment and determine the amount of payment. We will notify in writing the State VR agency or alternate participant of our determination. If we find in any postpayment validation review that more or less than the correct amount of payment was made for a claim, we will determine that an overpayment or underpayment has occurred and will notify the State VR agency or alternate participant that we will make the appropriate adjustment.

(d) *Appeals.* If the State VR agency or alternate participant disagrees with our determination under this section, it may appeal that determination in accordance with § 404.2127. For purposes of this section, an appeal must be filed within

60 days after receiving the notice of our determination.

PART 416—SUPPLEMENTAL SECURITY INCOME FOR THE AGED, BLIND, AND DISABLED

20 CFR part 416, subpart V, is amended as follows:

1. The authority citation for subpart V of part 416 continues to read as follows:

Authority: Secs. 1102, 1615, and 1631(d)(1) and (e) of the Social Security Act; 42 U.S.C. 1302; 1382d, and 1383(d)(1) and (e); sec. 2344 of Pub. L. 97-35, 95 Stat. 867.

2. Section 416.2202 is amended by revising paragraph (b), by redesignating paragraphs (c) through (n) as paragraphs (d) through (o), by adding a new paragraph (c), and by revising redesignated paragraphs (e) and (l) to read as follows:

§ 416.2202 Purpose and scope.

* * * * *

(b) Section 416.2204 explains how State VR agencies or alternate participants may participate in the payment program under this subpart.

(c) Section 416.2206 describes the basic qualifications for alternate participants.

* * * * *

(e) Sections 416.2210 through 416.2211 describe when an individual has completed a continuous period of SGA and when VR services will be considered to have contributed to that period.

* * * * *

(l) Section 416.2220 and 416.2221 describe the audits and the prepayment and postpayment validation reviews we will conduct.

* * * * *

3. Section 416.2204 is revised to read as follows:

§ 416.2204 Participation by State VR agencies or alternate participants.

(a) *General.* In order to participate in the payment program under this subpart through its VR agency(ies), a State must have a plan which meets the requirements of title I of the Rehabilitation Act of 1973, as amended. An alternate participant must have a similar plan and otherwise qualify under § 416.2206.

(b) *Participation by States.* (1) The opportunity to participate through its VR agency(ies) with respect to disabled or blind recipients in the State will be offered first to the State in accordance with paragraph (c) of this section, unless the State has notified us in advance under paragraph (e)(1) of this section of its decision not to participate or to limit such participation.

(2) A State with one or more approved VR agencies may choose to limit participation of those agencies to a certain class(es) of disabled or blind recipients. For example, a State with separate VR agencies for the blind and disabled may choose to limit participation to the VR agency for the blind. In such a case, we would give the State, through its VR agency for the blind, the opportunity to participate with respect to blind recipients in the State in accordance with paragraph (d) of this section. We would arrange for VR services for disabled recipients in the State through an alternate participant(s). A State that chooses to limit participation of its VR agency(ies) must notify us in advance under paragraph (e)(1) of this section of its decision to limit such participation.

(3) If a State chooses to participate by using a State agency other than a VR agency with a plan for VR services approved under title I of the Rehabilitation Act of 1973, as amended, that State agency may participate only as an alternate participant.

(c) *Opportunity for participation through State VR agencies.* (1) Unless a State has decided not to participate or to limit participation, we will give the State the opportunity to participate through its VR agency(ies) with respect to disabled or blind recipients in the State by referring such recipients first to the State VR agency(ies) for necessary VR services. A State, through its VR agency(ies), may participate with respect to any recipient so referred by accepting the recipient as a client for VR services and notifying us under paragraph (c)(2) of this section of such acceptance.

(2) In order for the State to participate with respect to a disabled or blind recipient whom we referred to a State VR agency, the State VR agency must notify the appropriate Regional Commissioner (SSA) in writing of its decision to accept the recipient as a client for VR services. The notice must be received by the appropriate Regional Commissioner (SSA) no later than the close of the third month following the month in which we referred the recipient to the State VR agency. If we do not receive such notice with respect to a recipient whom we referred to the State VR agency, we may arrange for VR services for that recipient through an alternate participant.

(d) *Opportunity for limited participation through State VR agencies.* If a State has decided under paragraph (e)(1) of this section to limit participation of its VR agency(ies) to a certain class(es) of disabled or blind recipients in the State, we will give the State the opportunity to participate with respect to such class(es) of disabled or blind recipients by referring such recipients first to the State VR agency(ies) for necessary VR services. The State, through its VR agency(ies), may participate with respect to any recipient so referred by accepting the recipient as a client for VR services and notifying us under paragraph (c)(2) of this section of such acceptance.

(e) *Decision of a State not to participate or to limit participation.* (1) A State may choose not to participate through its VR agency(ies) with respect to any disabled or blind recipients in the State, or it may choose to limit participation of its VR agency(ies) to a certain class(es) of disabled or blind recipients in the State. A State which decides not to participate or to limit participation must provide advance written notice of that decision to the appropriate Regional Commissioner (SSA). Unless a State specifies a later month, a decision not to participate or to limit participation will be effective beginning with the third month following the month in which the notice of the decision is received by the appropriate Regional Commissioner (SSA). The notice of the State decision must be submitted by an official authorized to act for the State for this purpose. A State must provide to the appropriate Regional Commissioner (SSA) an opinion from the State's Attorney General verifying the authority of the official who sent the notice to act for the State. This opinion will not be necessary if the notice is signed by the Governor of the State.

(2) (i) If a State has decided not to participate through its VR agency(ies), we may arrange for VR services through an alternate participant(s) for disabled or blind recipients in the State.

(ii) If a State has decided to limit participation of its VR agency(ies) to a certain class(es) of disabled or blind recipients, we may arrange for VR services through an alternate participant(s) for the class(es) of disabled or blind recipients in the State excluded from the scope of the State's participation.

(3) A State which has decided not to participate or to limit participation may participate later through its VR agency(ies) in accordance with paragraph (c) of this section, provided that such participation will not conflict with any previous commitment which we may have made to an alternate participant(s) under paragraph (e)(2) of this section. A State which decides to resume participation under paragraph (c) of this section must provide advance

written notice of that decision to the appropriate Regional Commissioner (SSA). Unless a commitment to an alternate participant(s) requires otherwise, a decision of a State to resume participation under paragraph (c) of this section will be effective beginning with the third month following the month in which the notice of the decision is received by the appropriate Regional Commissioner (SSA) or, if later, with a month specified by the State. The notice of the State decision must be submitted by an official authorized to act for the State as explained in paragraph (e)(1) of this section.

(f) *Use of alternate participants.* The Commissioner, by written agreement or contract, may arrange for VR services through an alternate participant(s) for any disabled or blind recipient in the State with respect to whom the State is unwilling to participate through its VR agency(ies). In such a case, we may refer the recipient to such alternate participant for necessary VR services. The Commissioner will find that a State is unwilling to participate with respect to any of the following disabled or blind recipients in that State:

(1) A disabled or blind recipient whom we referred to a State VR agency under paragraph (c) or (d) of this section if we do not receive a notice within the stated time period under paragraph (c)(2) of this section of a decision by the VR agency to accept the recipient as a client for VR services;

(2) The class(es) of disabled or blind recipients excluded from the scope of the State's participation if the State has decided to limit participation of its VR agency(ies); and

(3) All disabled or blind recipients in the State if the State has decided not to participate through its VR agency(ies).

4. A new § 416.2206 is added to read as follows:

§ 416.2206 Basic qualifications for alternate participants.

(a) *General.* We may arrange for VR services through an alternate participant by written agreement or contract as explained in § 416.2204(f). An alternate participant may be a public or private agency, organization, institution or individual (that is, any entity whether for-profit or not-for-profit), other than a State agency.

(1) An alternate participant must—

(i) Be licensed, certified, accredited, or registered, as appropriate, to provide VR services in the State in which it provides services; and

(ii) Under the terms of the written contract or agreement, have a plan similar to the State plan described in § 416.2204(a) which shall govern the provision of VR services to individuals.

(2) We will not use as an alternate participant any agency, organization, institution, or individual—

(i) Whose license, accreditation, certification, or registration is suspended or revoked for reasons concerning professional competence or conduct or financial integrity;

(ii) Who has surrendered such license, accreditation, certification, or registration pending a final determination of a formal disciplinary proceeding; or

(iii) Who is precluded from Federal procurement or nonprocurement programs.

(b) *Standards for the provision of VR services.* An alternate participant's plan must provide among other things, that the provision of VR services to individuals will meet certain minimum standards, including, but not limited to, the following:

(1) All medical and related health services furnished will be prescribed by, or provided under the formal supervision of, persons licensed to prescribe or supervise the provision of these services in the State;

(2) Only qualified personnel and rehabilitation facilities will be used to furnish VR services; and

(3) No personnel or rehabilitation facility described in paragraph (a)(2)(i), (ii), or (iii) of this section will be used to provide VR services.

5. Section 416.2208 is amended by redesignating paragraphs (b) through (f) as (c) through (g), by adding a new paragraph (b), and by revising redesignated paragraphs (d) and (f) to read as follows:

§ 416.2208 Requirements for payment.

* * * * *

(b) The claim for payment must be in a form prescribed by us and contain the following information:

(1) A description of each service provided;

(2) When the service was provided;

(3) The cost of the service; and

(4)(i) For claims for cases which are described in § 416.2201(a), a clear explanation of how the service contributed to the individual's performance of a continuous 9-month period of SGA; or

(ii) For claims for cases described in § 416.2201(b) or (c), a clear explanation of how the service was reasonably expected to motivate or assist the individual to perform SGA;

* * * * *

(d) The VR services for which payment is being requested must have been provided under a State plan for VR services approved under title I of the Rehabilitation Act of 1973, as amended, or, in the case of an alternate participant, under a negotiated plan, and must be services that are described in § 416.2214;

* * * * *

(f) The State VR agency or alternate participant must maintain, and provide as we may require, adequate documentation of all services and costs for all disabled or blind recipients with respect to whom a State VR agency or alternate participant could potentially request payment for services and costs under this subpart; and

* * * * *

6. Section 416.2209 is amended by revising paragraph (c), by removing the word "and" at the end of paragraph (f), by redesignating paragraph (g) as paragraph (h), and by adding a new paragraph (g) to read as follows:

§ 416.2209 Responsibility for making payment decisions.

* * * * *

(c) Whether an individual, without good cause, refused to continue to accept VR services or failed to cooperate in a VR program for a month(s) after October 1984, and whether an individual's disability or blindness payment should be suspended;

* * * * *

(g) Whether a VR service is a service described in § 416.2214; and

* * * * *

7. Section 416.2211 is amended by revising the introductory text of the section, by revising paragraphs (a)(1) and (a)(2), and by revising the introductory text of paragraph (b)(1) to read as follows:

§ 416.2211 Criteria for determining when VR services will be considered to have contributed to a continuous period of 9 months.

The State VR agency or alternate participant may be reimbursed for VR services if such services contribute to the individual's performance of a continuous 9-month period of SGA. The following criteria apply to individuals who received more than just evaluation services. If a State VR agency or alternate participant claims payment for services to an individual who received only evaluation services, it must establish that the individual's continuous period or medical recovery (if medical recovery occurred before completion of a continuous period) would not have occurred without the services provided. In applying the criteria below, we will consider services

described in § 416.2214 that were initiated, coordinated or provided, including services before October 1, 1981.

(a) * * *

(1) *One year or less.* Any VR services which significantly motivated or assisted the individual in returning to, or continuing in, SGA will be considered to have contributed to the continuous period.

(2) *More than one year.* (i) If the continuous period was preceded by transitional work activity (employment or self-employment which gradually evolved, with or without periodic interruption, into SGA), and that work activity began less than a year after VR services ended, any VR services which significantly motivated or assisted the individual in returning to, or continuing in, SGA will be considered to have contributed to the continuous period.

(ii) If the continuous period was not preceded by transitional work activity that began less than a year after VR services ended, VR services will be considered to have contributed to the continuous period only if it is reasonable to conclude that the work activity which constitutes a continuous period could not have occurred without the VR services (e.g., training).

(b) *Continuous period with medical recovery occurring before completion.* (1) If an individual medically recovers before a continuous period has been completed, VR services under paragraph (a) of this section will not be payable unless some VR services contributed to the medical recovery. VR services will be considered to have contributed to the medical recovery if—

* * * * *

8. Section 416.2213 is revised to read as follows:

§ 416.2213 Payment for VR services in a case of VR refusal.

(a) For purposes of this section, VR refusal means an individual's refusal to continue to accept VR services or failure to cooperate in such a manner as to preclude the individual's successful rehabilitation.

(b) No later than the 60th day after the State VR agency or alternate participant makes a preliminary finding that an individual refuses to continue to accept VR services or fails to cooperate in a VR program, the State VR agency or alternate participant shall report to the appropriate Regional Commissioner (SSA) in writing such individual's VR refusal so that we may make the determination described in § 416.2209(c).

(c) Payment can be made to a State VR agency or alternate participant for the costs of VR services provided to an individual who, after filing an application with the State VR agency or alternate participant for rehabilitation services, without good cause, refuses to continue to accept VR services or fails to cooperate in such a manner as to preclude the individual's successful rehabilitation. A State VR agency or alternate participant may be paid, subject to the provisions of this subpart, for the costs of VR services provided to an individual if the individual's monthly disability or blindness payment has been suspended or terminated for a month or months after October 1984 because of VR refusal.

9. Section 416.2214 is revised to read as follows:

§ 416.2214 Services for which payment may be made.

(a) *General.* Payment may be made for VR services provided by a State VR agency in accordance with title I of the Rehabilitation Act of 1973, as amended, or by an alternate participant under a negotiated plan, subject to the limitations and conditions in this subpart. VR services for which payment may be made under this subpart include only those services described in paragraph (b) of this section which are—

(1) Necessary to determine an individual's eligibility for VR services; or

(2) Provided by a State VR agency under an IWRP, or by an alternate participant under a similar document, but only if the services could reasonably be expected to motivate or assist the individual in returning to, or continuing in, SGA.

(b) *Specific services.* Payment may be made under this subpart only for the following VR services:

(1) Evaluation of vocational rehabilitation potential, including diagnostic and related services incidental to determine—

(i) The nature and extent of the physical or mental impairment(s) and the resultant impact on the individual's employability;

(ii) The likelihood that an individual will benefit from vocational rehabilitation services in terms of employability; and

(iii) An employment goal consistent with the capacities of the individual and employment opportunities;

(2) Counseling and guidance, including personal adjustment counseling, and those referrals necessary to help a disabled or blind individual secure needed services from other agencies;

(3) Physical and mental restoration services necessary to correct or substantially modify a physical or mental condition which is stable or slowly progressive and which constitutes a barrier to suitable employment at the SGA level;

(4) Vocational and other training services, including personal and vocational adjustment, books, tools, and other training materials, except that training or training services in institutions of higher education will be covered under this section only if maximum efforts have been made by the State VR agency or alternate participant to secure grant assistance in whole or in part from other sources;

(5) Maintenance expenses that are extra living expenses over and above the individual's normal living expenses and that are incurred solely because of the individual's participation in the VR program and that are necessary in order for the individual to benefit from other necessary VR services;

(6) Travel and related expenses necessary to transport an individual for purpose of enabling the individual's participation in other necessary VR services;

(7) Services to family members of a disabled or blind individual only if necessary to the successful vocational rehabilitation of that individual;

(8) Interpreter services and note-taking services for a deaf individual and tactile interpreting for a deaf-blind individual;

(9) Reader services, rehabilitation teaching services, note-taking services, and orientation and mobility services for a blind individual;

(10) Telecommunications, sensory, and other technological aids and devices;

(11) Placement in suitable employment;

(12) Post-employment services necessary to maintain or regain other suitable employment at the SGA level;

(13) Occupational licenses, tools, equipment, initial stocks, and supplies;

(14) Rehabilitation engineering services; and

(15) Other goods and services that can reasonably be expected to motivate or assist the individual in returning to, or continuing in, SGA.

10. Section 416.2217 is amended by revising the introductory text of the section and by revising paragraphs (b) and (c) to read as follows:

§ 416.2217 What costs will be paid.

In accordance with section 1615(d) of

the Social Security Act, the Secretary will pay the State VR agency or alternate participant for the VR services described in § 416.2214 which were provided during the period described in § 416.2215 and which meet the criteria in § 416.2211, § 416.2212, or § 416.2213, but subject to the following limitations:

* * * * *

(b) The cost must not have been paid or be payable from some other source. For this purpose, State VR agencies or alternate participants will be required to seek payment or services from other sources in accordance with the "similar benefit" provisions under 34 CFR part 361, including making maximum efforts to secure grant assistance in whole or part from other sources for training or training services in institutions of higher education. Alternate participants will not be required to consider State VR services a similar benefit.

(c) (1) The cost must be reasonable and necessary, in that it complies with the written cost-contaiment policies of the State VR agency established under 34 CFR part 361 or, in the case of an alternate participant, it complies with similar written policies established under a negotiated plan. A cost which complies with these policies will be considered necessary only if the cost is for a VR service described in § 416.2214. The State VR agency or alternate participant must maintain and use these cost-containment policies, including any reasonable and appropriate fee schedules, to govern the costs incurred for all VR services, including the rates of payment for all purchased services, for which payment will be requested under this subpart. For the purpose of this subpart, the written cost-containment policies must provide guidelines designed to ensure—

(i) The lowest reasonable cost for such services; and

(ii) Sufficient flexibility so as to allow for an individual's needs.

(2) The State VR agency or alternate participant shall submit to us before the end of the 1st calendar quarter of each year a written summary of its cost-containment policies and, when requested by us, shall submit to us a copy(ies) of its specific written policies and procedures (e.g., any guidelines and fee schedules for a given year).

* * * * *

11. Section 416.2221 is revised to read as follows:

§ 416.2221 Validation reviews.

(a) *General.* We will conduct a validation review of a sample of the claims for payment filed by each State VR agency or alternate participant. We may conduct these reviews either on a prepayment or postpayment basis. We may review a specific claim, a larger sample of the claims, or all of the claims filed by any State VR agency or alternate participant, if we determine that such review is necessary to ensure compliance with the requirements of this subpart. For each claim selected for review, the State VR agency or alternate participant must submit such records of the VR services and costs for which payment has been requested or made under this subpart, or copies of such records, as we may require to ensure that the services and costs meet the requirements for payment. The State VR agency or alternate participant shall permit us (including duly authorized representatives) access to, and the right to examine, any records relating to such services and costs. Any review performed under this section will not be considered an audit for purposes of this subpart.

(b) *Purpose.* The primary purpose of these reviews is—

(1) To ensure that the VR services and costs meet the requirements for payment under this subpart;

(2) To assess the validity of our documentation requirements; and

(3) To assess the need for additional validation reviews or additional documentation requirements for any State VR agency or alternate participant to ensure compliance with the requirements under this subpart.

(c) *Determinations.* In any validation review, we will determine whether the VR services and costs meet the requirements for payment and determine the amount of payment. We will notify in writing the State VR agency or alternate participant of our determination. If we find in any postpayment validation review that more or less than the correct amount of payment was made for a claim, we will determine that an overpayment or underpayment has occurred and will notify the State VR agency or alternate participant that we will make the appropriate adjustment.

(d) *Appeals.* If the State VR agency or alternate participant disagrees with our determination under this section, it may appeal that determination in accordance with § 416.2227. For purposes of this section, an appeal must be filed within 60 days after receiving the notice of our determination.

[FR Doc. 92-17331 Filed 7-23-92; 8:45 am]

BILLING CODE 4190-29-M

DEPARTMENT OF JUSTICE

Drug Enforcement Administration

21 CFR Part 1308

Schedules of Controlled Substances; Temporary Placement of Aminorex Into Schedule I

AGENCY: Drug Enforcement Administration, Justice.

ACTION: Notice of intent.

SUMMARY: The Administrator of the Drug Enforcement Administration (DEA) is issuing this notice of intent to temporarily place aminorex into Schedule I of the Controlled Substances Act (CSA) pursuant to the temporary scheduling provisions of the CSA (21 U.S.C. 811(h)). This intended action is based on a finding by the Administrator that the placement of aminorex into Schedule I of the CSA is necessary to avoid an imminent hazard to the public safety. Finalization of this action will impose the criminal sanctions and regulatory controls of Schedule I on the manufacture, distribution and possession of aminorex.

FOR FURTHER INFORMATION CONTACT: Howard McClain, Jr., Chief, Drug and Chemical Evaluation Section, Drug Enforcement Administration, Washington, D.C. 20537, Telephone: (202) 307-7183.

SUPPLEMENTARY INFORMATION: The Comprehensive Crime Control Act of 1984 (Pub. L. 98-473), which was signed into law on October 12, 1984, amended section 201 of the Controlled Substances Act (CSA) (21 U.S.C. 811) to give the Attorney General the authority to temporarily place a substance into Schedule I of the CSA if he finds that such action is necessary to avoid an imminent hazard to the public safety. A substance may be temporarily scheduled under the emergency provision of the CSA if that substance is not listed in any other schedule under section 202 of the CSA (21 U.S.C. 812) or if there is no approval or exemption in effect under 21 U.S.C. 355 for the substance. The Attorney General has delegated his authority under 21 U.S.C. 811 to the Administrator of DEA (28 CFR 0.100). In making a finding that placing a substance temporarily into Schedule I of the CSA is necessary to avoid an imminent hazard to the public safety the Administrator is required to consider three of the eight factors set forth in section 201(c) of the CSA (21 U.S.C. 811(c)). These factors are as follows: (4) History and current pattern of abuse; (5) The scope, duration and

significance of abuse; and (6) What, if any, risk there is to the public health.

House Report 98–835 which accompanied Public Law 98–473 states that "This new procedure (emergency scheduling) is intended by the committee to apply to what have been called 'designer drugs', new chemical analogs or variations of existing controlled substances, which have a psychedelic, stimulant or depressant effect and have a high potential for abuse." Aminorex is a central nervous system stimulant and is an analogue of *cis*-4-methylaminorex, which is a Schedule I stimulant with a high potential for abuse. As such, aminorex is the type of substance which Congress intended to be considered for temporary scheduling.

Aminorex, also called aminoxaphen, 2-amino-5-phenyl-2-oxazoline, or 4,5-dihydro-5-phenyl-2-oxazolamine is a phenylethylamine in which the side-chain has been cyclized into a substituted oxazoline. Its chemical structure is substantially similar to that of *cis*-4-methylaminorex. Available pharmacological data indicate that aminorex produces amphetamine-like, psychomotor stimulant effects in laboratory animals.

Illicit trafficking with aminorex was first reported in 1990 by law enforcement personnel in Missouri. Subsequently it has bee sold as methamphetamine in Minnesota, Michigan, Wisconsin, Florida, South Carolina and Pennsylvania. In 1991 a clandestine laboratory engaged in the production of aminorex was encountered in the state of Florida. Its operators were successfully prosecuted for the manufacture of a controlled substance analogue pursuant to 21 U.S.C. 813.

There has been one report of a death in 1990 linked to the abuse of aminorex in the United States. However, the scientific literature contains reports of deaths in Europe attributed to pulmonary hypertension in patients who were taking aminorex as an anorectic. Aminorex was sold in Europe as an approved anorectic for a short period in the mid-sixties. The similarity of aminorex to amphetamine and 4-mehthylaminorex, especially its central nervous system stimulant activity, strongly suggests that abuse of this substance will lead to health and safety risks similar to those produced by amphetamine, methamphetamine, and 4-methylaminorex. Since aminorex is prepared only in clandestine laboratories, there are additional risks inherently associated with clandestine manufacture.

The above data show that the continued, uncontrolled clandestine production, distribution and abuse of aminorex poses an imminent hazard to the public safety. DEA is not aware of any commercial manufacturer or supplier of aminorex in the United States. DEA is also not aware of any recognized therapeutic use of this substance in the United States.

In accordance with the provisions of section 201(h) of the CSA (21 U.S.C. 811(h)) and 28 CFR 0.100, the Administrator has considered the three factors required for a determination of whether temporarily scheduling aminorex under the CSA is necessary to avoid an imminent hazard to the public safety. Based on a consideration of these factors and other relevant information, the Administrator finds that placement of aminorex into Schedule I of the CSA is necessary to avoid an imminent hazard to the public safety.

As required by section 201(h)(4) of the CSA (21 U.S.C. 811(h)(4)), the Administrator has notified the Assistant Secretary for Health, delegate of the Secretary of the Department of Health and Human Services, of his intention to temporarily place aminorex into Schedule I of the CSA. Comments submitted by the Assistant Secretary for Health in response to this notification, including whether there is an exemption or approval in effect for aminorex under the Federal Food, Drug and Cosmetic Act, shall be taken into consideration before a final order is published. Because the Administrator finds that it is necessary to temporarily place aminorex into Schedule I to avoid an imminent hazard to the public safety, the final order, if issued, will be effective on the date of publication in the **Federal Register**. Further, it is the intention of the Administrator to issue such a final order as soon as possible after the expiration of thirty days from the date of publication of this notice and the date that notification was transmitted to the Assistant Secretary for Health.

The Administrator of the Drug Enforcement Administration hereby certifies that this notice of intent to temporarily place aminorex into Schedule I of the CSA will have no significant impact upon entities whose interests must be considered under the Regulatory Flexibility Act, 5 U.S.C. 801 *et seq.*

The temporary scheduling of aminorex is not a major rule for the purposes of Executive Order (E.O.) 12291 of February 17, 1981. It has been determined that drug scheduling matters are not subject to review by the Office of Management and Budget (OMB) pursuant to the provisions of E.O. 12291. Accordingly, this proposed emergency scheduling action is not subject to the provisions of E.O. 12778 which are contingent upon review by OMB. This regulation both responds to an emergency situation posing an imminent danger to the public health and safety, and is essential to a criminal law enforcement function of the United States. Accordingly, it is not subject to the moratorium on regulations ordered by the President of the United States in his memorandum of January 28, 1992, as amended.

This action has been analyzed in accordance with the principles and criteria in E.O. 12291, and it has been determined that the temporary placement of aminorex into Schedule I of the CSA does not have sufficient federalism implications to warrant the preparation of a Federalism Assessment.

List of Subjects in 21 CFR Part 1308

Administrative practice and procedure, Drug traffic control, Narcotics, Prescription drugs, Reporting and recordkeeping requirements.

Under the authority vested in the Attorney General by Section 201(h)) of the CSA (21 U.S.C. 811(h)), and delegated to the Administrator of the DEA by Department of Justice regulations (28 CFR 0.100), the Administrator hereby intends to order that 21 CFR part 1308 be amended as follows:

PART 1308—SCHEDULES OF CONTROLLED SUBSTANCES

1. The authority citation for 21 CFR part 1308 continues to read as follows:

Authority: 21 U.S.C. 811, 812, 871b, unless otherwise noted.

2. Paragraph (g)(4) is added to § 1308.11 to read as follows:

§ 1308.11 Schedule I.

* * * * *

(g) * * *

(4) Aminorex (Some other names: 2-amino-5-phenyl-2-oxazoline; aminoxaphen; 4,5-dihydro-5-phenyl-2-oxazolamine), its salts, optical isomers, and salts of optical isomers—1585

Dated: July 17, 1992.

Robert C. Bonner,

Administrator of Drug Enforcement.

[FR Doc. 92–17523 Filed 7–23–92; 8:45 am]

BILLING CODE 4410-09-M

DEPARTMENT OF LABOR

Office of the Secretary

29 CFR Part 42

RIN 2190-AA11

Coordinated Enforcement

AGENCY: Office of the Secretary, Labor.

ACTION: Advance notice of proposed rulemaking.

SUMMARY: The Department of Labor is proposing to revise its regulations for coordinated enforcement of farm labor protective statutes. The rule will clarify existing regulatory language and update the regulations by making nomenclature and other technical amendments necessitated by subsequent legislation, Departmental administrative reorganizations, and interdepartmental coordination. The regulations' sections also are reorganized for clarification. In addition, the rule will modify some of the regional quarterly and annual reporting requirements of the existing regulations, and will add a new outreach initiative to the migrant and seasonal farmworker progam.

DATES: Comments are invited on the advance proposed rule. Comments shall be submitted no later than August 24, 1992.

ADDRESSES: Comments shall be submitted, in writing, by mail to the Deputy Secretary of Labor, 200 Constitution Avenue NW., room S-2114, Washington, DC 20210, Attention: Office of Program Economics, Office of the Assistant Secretary for Policy.

FOR FURTHER INFORMATION CONTACT: Gordon Claucherty, Director, National Farm Labor Coordinated Enforcement Committee staff-level working group. Telephone: (202) 523-6026 (This is not a toll-free number).

SUPPLEMENTARY INFORMATION: The Department of Labor (DOL or Department) proposes to revise its regulations for coordinated enforcement of farm labor protective statutes. The rule will clarify existing regulatory language, update the regulations by making nomenclature and other technical amendments necessitated by superseding legislation and Departmental administrative reorganizations, revise guidelines for submitting regional plans and quarterly reports, reorganize the regulations' sections for clarification, and add a new outreach initiative to the migrant and seasonal farmworker programs. Also, the Department is seeking further information on how to best coordinate the administration of the DOL enforcement programs that impact farmworkers.

Part 42 was originally promulgated by the Department in 1980 to coordinate the farm labor enforcement activities of the Employment and Training Administration (ETA), the Employment Standards Administration (ESA), the Occupational Safety and Health Administration (OSHA), and the Office of the Solicitor of Labor (SOL). See 45 FR 39489 (June 10, 1980). Since part 42 was published in 1980, a number of changes have occurred in the Department's farm labor programs, such as: The Farm Labor Contractor Registration Act has been replaced by the Migrant and Seasonal Agricultural Worker Protection Act; the Immigration Reform and Control Act of 1986 has amended the Immigration and Nationality Act (INA) to give the Department a statutory enforcement role under that Act; ESA has reorganized its regional offices and responsibility for directing the regional coordinating committees established in the regulations has been delegated to the Wage and Hour Division's Regional Administrators; and the Assistant Secretary for Policy has assumed a role in farm labor programs at the national level (*e.g.*, in the Special Agricultural Worker and Replenishment Agricultural Worker programs). These and other changes necessitate updating the coordinated enforcement regulations.

In addition, the rule will revise the present guidelines with respect to requirements for the annual plans and quarterly reports submitted by the Regional Farm Labor Coordinated Enforcement Committees (Regional Committees). Since the mission and function statements of the Department's farm labor coordinating agencies are on file in the National office, it is not necessary to duplicate them in the regional plans and reports. Further, since each of the Department's program offices has instituted statistical reporting systems that were not in place when the regulations were originally promulgated, it is not necessary to duplicate these data in the regional plans and reports; instead, the data will be maintained by the program agencies at the regional and national levels in such a way that it can be made available to the National Committee upon request.

Finally, a new emphasis on farm labor outreach activities has been added to the coordinated farm labor enforcement program. The rule will incorporate this initiative into the regulations.

Other than the clarifying and technical changes described above, the rule will not alter the present provisions of Part 42 for overseeing the coordination of the Department's farm labor enforcement activities. The rule will maintain a National Committee, consisting of the heads of the above-named agencies and chaired by the Deputy Secretary of Labor. The rule will maintain the Regional Committees, chaired by the Regional Administrators of the Wage and Hour Division and consisting of the Regional Administrator of OSHA, ETA, and Wage and Hour, as well as the Regional Solicitor. Each Regional Committee will continue to hold at least one annual public meeting to discuss farm labor issues. The National Committee and the Regional Committees will continue to be assisted in their functions by saff-level working groups, with members from each of the above-named agencies.

The clarification and technical amendments of the regulations do not indicate any lessening of commitment to migrant and seasonal farmworker programs on the part of the Department. Instead, the amendments reflect statutory and administrative changes that have occurred since the rule was first promulgated. The streamlining of the regional reporting requirements, for example, reflects the Department's effort to be more effective and efficient in the coordinated enforcement of the various farm labor statutes. Further, the addition of the Assistant Secretary for Policy to the membership of the National Committee adds strength to that committee. Through the proposed rule updating the part 42 regulations, the Department will demonstrate its firm commitment to migrant and seasonal farmworker programs.

Signed at Washington, DC, this 17th day of July 1992.

Lynn Martin,

Secretary of Labor.

[FR Doc. 92-17554 Filed 7-23-92; 8:45 am]

BILLING CODE 4510-23-M

FEDERAL EMERGENCY MANAGEMENT AGENCY

44 CFR Part 67

[Docket No. FEMA-7047]

Proposed Flood Elevation Determinations

AGENCY: Federal Insurance Administration, FEMA.

ACTION: Proposed rule.

SUMMARY: Technical information or comments are requested on the proposed base (100-year) flood

elevations and proposed base flood elevation modifications for the communities listed below. The base (100-year) flood elevations are the basis for the floodplain management measures that the community is required either to adopt or to show evidence of being already in effect in order to qualify or remain qualified for participation in the National Flood Insurance Program (NFIP).

DATES: The comment period is ninety (90) days following the second publication of this proposed rule in a newspaper of local circulation in each community.

ADDRESSES: The proposed base flood elevations for each community are available for inspection at the office of the Chief Executive Officer of each community. The respective addresses are listed in the following table.

FOR FURTHER INFORMATION CONTACT: William R. Locke, Chief, Risk Studies Division, Federal Insurance Administration, 500 C Street, SW., Washington, DC 20472, (202) 646-2754.

SUPPLEMENTARY INFORMATION: The Federal Emergency Management Agency (FEMA or Agency) gives notice of the proposed determinations of base (100-year) flood elevations and modified base flood elevations for each community listed, in accordance with section 110 of the Flood Disaster Protection Act of 1973, 42 U.S.C. 4104, and 44 CFR 67.4(a).

These base flood and modified base flood elevations, together with the floodplain management criteria required by 44 CFR 60.3, are the minimum that are required. They should not be construed to mean that the community must change any existing ordinances that are more stringent in their floodplain management requirements. The community may at any time enact stricter requirements of its own, or pursuant to policies established by other Federal, state or regional entities. These proposed elevations will also be used to calculate the appropriate flood insurance premium rates for new buildings and their contents.

National Environmental Policy Act

This proposed rule is categorically excluded from the requirements of 44 CFR part 10, Environmental Consideration. No environmental impact assessment has been prepared.

Regulatory Flexibility Act

This rule will not have a significant economic impact on a substantial number of small entities in accordance with the Regulatory Flexibility Act, 5 U.S.C. 601 *et seq.*

Regulatory Impact Analysis

This proposed rule is not a major rule under Executive Order 12291, February 17, 1981. No regulatory impact analysis has been prepared.

Executive Order 12612, Federalism

This proposed rule involves no policies that have federalism implications under Executive Order 12612, Federalism, dated October 26, 1987.

Executive Order 12778, Civil Justice Reform

This proposed rule meets the applicable standards of section 2(b)(2) of Executive Order 12778.

List of Subjects in 44 CFR Part 67

Administrative practice and procedure, Flood insurance, Reporting and recordkeeping requirements. Accordingly, 44 CFR part 67 is proposed to be amended as follows:

PART 67—[AMENDED]

1. The authority citation for part 67 continues to read as follows:

Authority: 42 U.S.C. 4001 *et seq.*; Reorganization Plan No. 3 of 1978, 3 CFR, 1978 Comp., p. 329; E.O. 12127, 44 FR 19367, 3 CFR, 1979 Comp., p. 376.

§ 67.4 [Amended]

2. Section 67.4 is proposed to be amended as follows:

Source of flooding and location	#Depth in feet above ground *Elevation in feet (NGVD)
GEORGIA	
Fannin County (unincorporated areas)	
Mineral Springs Creek:	
At the confluence with Weaver Creek	*1,580
Approximately 1.5 miles upstream of Aska Road	*1,671
Weaver Creek:	
Approximately 650 feet upstream of the confluence with Toccoa River	*1,553
Approximately 280 feet upstream of the confluence of Mineral Springs Creek	*1,585
Maps available for inspection at the Fannin County Courthouse, Land Development Office, Blue Ridge, Georgia.	
Send comments to Mr. Richard Stanley, Chairman of the Board of Fannin County Commissioners, P.O. Box 487, Blue Ridge, Georgia 30513.	
NEW YORK	
Philadelphia (village), Jefferson County	
Indian River:	
At downstream corporate limits	*424
At upstream corporate limits	*488
Black Creek:	
At confluence with Indian River	*488
At a point approximately 1,500 feet upstream of CONRAIL	*488
Maps available for inspection at the Philadelphia Village Hall, 56 Main Street, Philadelphia, New York.	
Send comments to the Honorable Wayne L. Huntress, Mayor of Village of Philadelphia, Jefferson County, P.O. Box 70, Philadelphia, New York 13673	

§ 67.4 [Amended]

3. The tables published under the authority of § 67.4 are proposed to be amended as follows:

State	City/town/country	Source of flooding	Location	#Depth in feet above ground *Elevation in feet (NGVD)	
				Existing	Modified
Arkansas	City of Harrison, Boone County.	Dry Jordan Creek	At the confluence with Crooked Creek	*1,051	*1,054
			Just downstream of East Ridge Avenue	*1,054	*1,054
		Dry Jordan Tributary	At the confluence with Dry Jordan Creek	*1,120	*1,120
			Approximately 1,800 feet upstream of U.S. Highway 65.	None	*1,235
		Crooked Creek	Just downstream of U.S. Highway 65	*1,045	*1,046
			Approximately 1,700 feet upstream of Old Stone Road.	*1,068	*1,070
Maps are available for review at the Public Works Building, 303 Third Avenue, Harrison, Arkansas. Send comments to The Honorable William Gregg, Mayor, City of Harrison, P.O. Box 1715, Harrison, Arkansas 72601.					
California	Fontana San Bernardino County.	West Fontana Channel	Just east of the intersection of Orange Way and Oleander Avenue.	None	*1,242

State	City/town/country	Source of flooding	Location	#Depth in feet above ground *Elevation in feet (NGVD)	
				Existing	Modified
			Approximately 200 feet northeast of the intersection of Citrus Avenue and the Atchison Topeka and Santa Fe Railroad.	None	*1,232
			At the intersection of Citrus and Merrill Avenue	None	#1
			At the intersection of Randall Avenue and Date Street.	None	#2
			At the intersection of Ceres Avenue and Oleander Avenue.	None	#3
Maps are available for review at the City of Fontana Engineering Services, City Hall, 8353 Sierra Avenue, Fontana, California. Send comments to the Honorable William Kragness, Mayor, City of Fontana, 8353 Sierra Avenue, Fontana, California 92335.					
Colorado	City and County of Denver.	Westerly Creek	At Montview Boulevard	*5,314	*5,314
			At Beeler Street	*5,321	*5,319
			At 6th Avenue	*5,325	*5,324
			At 14th Avenue	*5,335	*5,331
			At 11th Avenue	None	*5,339
Maps are available for review at Public Works Department, City and County of Denver, 2460 West 26th Avenue, Suite 300C, Denver, Colorado. Send comments to The Honorable Wellington E. Webb, Mayor, City of Denver, 1437 Bannock Street, Denver, Colorado 80201.					
Illinois	Village of New Lenox, Will County.	Jackson Branch Creek	About 850 feet downstream of Jackson Branch Drive.	None	*659
			About 8,400 feet upstream of Nelson Street	None	*691
Maps are available for inspection at the Building Inspector's Office, Village Hall, 701 W. Haven Avenue, New Lenox, Illinois. Send comments to The Honorable John Nowakowski, Mayor, Village of New Lenox, Village Hall, 701 W. Haven Avenue, New Lenox, Illinois 60451.					
Michigan	Township of Standish, Arenac County.	Saginaw Bay	Along shoreline from 4300 feet north of Knickerbocker Road to Sagatoo Road.	*585	*586
			Along shoreline from Knickerbocker Road for 4300 feet north.	*585	*585
Maps are available for inspection at the Township Clerk's Office, Standish, Michigan. Send comments to The Honorable Paul LaClair, Township Supervisor, Township of Standish, 2140 Palmer Road, Standish, Michigan 40658.					
Missouri	Lincoln County Unincorporated Areas.	Cuivre River	At Burlington Northern Railroad	None	*458
			Approximately 2.14 miles upstream of State Route 47.	None	*478
		Buchanan Creek	At confluence with Cuivre River	*469	*471
			Approximately 1.05 miles upstream of confluence with Cuivre River.	*471	*472
		Big Creek	Approximately 3,950 feet downstream of County Route 729.	None	*480
			Approximately 1.13 mile upstream of County Route J.	None	*515
		Town Branch	Approximately 897 feet upstream of confluence with Buchanan Creek.	*473	*472
			Approximately 1.01 miles upstream of State Route 47.	*476	*477
		Brushy Fork Creek	At confluence with Bobs Creek	None	*454
			At County Route 691	None	*498
		Bobs Creek	At Burlington Northern Railroad	None	*447
			At State Route 47	None	*535
		Lost Creek	At Burlington Northern Railroad	None	*454
			Approximately 3.8 miles upstream of Burlington Northern Railroad.	None	*518
		Sandy Creek	Approximately 50 feet downstream of Burlington Northern Railroad.	None	*447
			Approximately 3.3 miles upstream of the confluence with Little Sandy Creek.	None	*582
Maps are available for inspection at the Lincoln County Surveyor's Office, 201 Main Street, Troy, Missouri. Send comments to Mr. Russell Cox, Presiding Commissioner, Lincoln County Commission, 201 Main Street, Troy, Missouri 63379.					
New Mexico	Santa Fe, City Santa Fe County.	Santa Fe River	Approximately 200 feet downstream of confluence of Arroyo Mascaras.	*6,883	*6,884
			At downstream side of Delgado Street	*7,033	*7,032
		Rob Flowpath	At confluence with Santa Fe River	*6,940	*6,938
			At divergence from Santa Fe River	*7,014	*7,017
		Arroyo Saiz	Approximately 60 feet upstream of confluence with Santa Fe River.	*7,035	*7,034
			Approximately 360 feet upstream of the most upstream crossing of Avenida Primavera.	None	*7,185
		Arroyo Mascaras	At confluence with Santa Fe River	*6,883	*6,884
			Approximately 80 feet upstream of West Alameda.	*6,887	*6,886

State	City/town/country	Source of flooding	Location	#Depth in feet above ground *Elevation in feet (NGVD)	
				Existing	Modified
Maps are available for inspection at the Santa Fee City Hall, 200 Lincoln Avenue, Santa Fe, New Mexico. Send comments to The Honorable Sam Pick, Mayor of the City of Santa Fe, Santa Fe County, P.O. Box 909, Santa Fe, New Mexico 87504.					
North Carolina	Town of Boone, Watauga County.	Winkler Creek	At mouth	*3,102	*3,102
			Just upstream of Flannery Fork Road	None	*3,157
		Boone Creek	At mouth	*3,118	*3,120
			Just downstream of Highland Avenue	*3,145	*3,148
			Just downstream of Unnamed Road, about 1,435 feet upstream of Clement Street.	*3,164	*3,164
		Hodges Creek	At mouth	*3,124	*3,126
			About 30 feet upstream of State Road 105 crossing, about 3,170 feet upstream of mouth.	None	*3,150
			About 85 feet upstream of State Road 105 crossing, about 3,170 feet upstream of mouth.	None	*3,156
			About 1.16 miles upstream of mouth	None	*3,199
Maps are available for inspection at the Planning Department, City Hall, Boone, North Carolina. Send comments to The Honorable Velma Burnley, Mayor, Town of Boone, City Hall, P.O. Box 192, Boone, North Caroline 28607.					
Ohio	City of Westerville, Franklin and Delaware Counties.	Spring Run	About 600 feet downstream of Dempsey Road	None	*826
			Just downstream of Maxtown Road	None	*893
		Big Walnut Creek	About 1.22 miles downstream of Central College Road.	*829	*828
			Just downstream of Central College Road	None	*833
		Alum Creek	About 2,200 feet downstream of West Schrock Road.	*798	*798
			About 1.48 miles upstream of West Main Street.	None	*814
Maps are available for inspection at 21 South State Street, Westerville, Ohio. Send comments to The Honorable John Parimuha, Mayor, City of Westerville, 21 South State Street, Westerville, Ohio 43081.					
Vermone	Fair Haven, Town Rutland County.	Castleton River	Upstream side of Adams Street	*317	*318
			At upstream corporate limits	*371	*370
Maps are available for inspection at the Fair Haven Town Hall, 3 North Park Place, Fair Haven, Vermont. Send comments to Ms. Patricia J. Paolillo, Town Manager of Fair Haven, Ruthland County, 3 North Park Place, Fair Haven, Vermont 05743.					

(Catalog of Federal Domestic Assistance No. 83.100, "Flood Insurance")

Issued: July 15, 1992.

C.M. "Bud" Schauerte,

Administrator, Federal Insurance Administration.

[FR Doc. 92-17395 Filed 7-23-92; 8:45 am]

BILLING CODE 6718-03-M

DEPARTMENT OF TRANSPORTATION

National Highway Traffic Safety Administration

49 CFR Part 571

[Docket No. 92-35; Notice 1]

RIN 2127-AE37

Federal Motor Vehicle Safety Standards; Lamps, Reflective Devices, and Associated Equipment

AGENCY: National Highway Traffic Safety Administration (NHTSA), DOT.

ACTION: Notice of Proposed Rulemaking.

SUMMARY: This notice grants a petition for rulemaking submitted by the G.T.B.-Brussels Working Party, and proposes an additional type of standardized replaceable light source to be used in replaceable bulb headlamp systems on motor vehicles. The light source, which incorporates a single filament, would be known as Type HB6. Known in Europe as Type H7, the bulb has already been approved by Working Party (WP) 29 and will soon be incorporated into ECE Regulation No. 37. The bulb is said to show more filament luminance and luminous flux, while consuming less electricity. It has been introduced for new headlamp designs with free shape reflectors.

DATES: The comment closing date for this proposal is September 8, 1992. Any request for an extension of time in which to comment must be received not later than 10 days before that date (49 CFR 553.19). The effective date of the amendment would be 30 days after publication of the final rule in the Federal Register.

ADDRESSES: Comments should refer to the docket number and notice number of the notice, and be submitted to: Docket Section, room 5109, 400 Seventh Street, SW., Washington, DC 20590. Docket hours are from 9:30 a.m. to 4 p.m., Monday through Friday.

FOR FURTHER INFORMATION CONTACT: Kenneth O. Hardie, Office of Rulemaking, NHTSA, 202-366-6987.

SUPPLEMENTARY INFORMATION: The National Highway Traffic Safety Administration has received a petition from the G.T.B.-Brussels Working Party for rulemaking to amend Federal Motor Vehicle Safety Standard No. 108 to permit the use of a new single filament halogen headlamp bulb in replaceable bulb headlamp systems. According to the petitioner, the new bulb, known in Europe as H7, provides improved headlighting performance. Type H7 has already been approved by WP 29, will soon be incorporated into ECE Regulation No. 37, and, if allowed in the United States, would contribute to the

international harmonization of standards.

According to the petitioner, the bulb shows more filament luminance and more luminous flux while consuming less electricity. It is intended for use in low profile lamps, and the tighter tolerances for filament location will ensure performance equivalent to light sources with looser tolerances used in higher profile lamps. The bulb has a black cap and a glass tubing which is free of distortion. The filament supports are designed and placed to minimize inadvertent reflection on the tube and leadwires which may otherwise result in glare.

The petitioner also states that the new bulb has been introduced particularly for new headlamps with free shape reflectors. These headlamps have special computer designed reflectors with which the required beam pattern can be produced nearly without the support of a lens. This requires tighter position tolerances of the bulb filament. Type H7 was designed in response to the need for smaller, shaped headlamps. It has a base designed entirely of metal which withstands heat build-up without outgassing of agents of the lamp base, or from silicon oils of the O-ring.

NHTSA has reviewed the petition and has concluded that there is a reasonable possibility that the amendment requested would be issued at the conclusion of a rulemaking proceeding. Accordingly, it has granted the petition, and is implementing the grant through this notice of proposed rulemaking. This rulemaking action is consistent with the agency's relaxation of design restrictions on light sources for headlamps in an effort to make Standard No. 108 more performance-oriented.

NHTSA notes that there is a pending rulemaking action which, if carried forward to a final rule, would obviate the need for the amendment requested by the petitioner. Under proposed part 564, *Replaceable Light Source Dimensional Information*, the information presented in the G.T.B. petition would be placed in an informational docket, and that act would be sufficient to permit use of the H7 in a headlamp with no amendment of Standard No. 108 required. Thus, if part 564 should be adopted before the issuance of a final rule permitting use of the H7 light source, the final action taken by the agency with respect to its proposal to allow Type H7 may be a simple announcement in the **Federal Register** that the relevant information has been placed in the part 565 Docket.

However, it is unclear from the petition whether the light source is a Type H7 designed for use in the United States, or the Type H7 approved in Europe by WP29 to the incorporated, with U.S. voltage, in ECE Regulation No. 37. NHTSA has asked the petitioner for a clarification, because if the WP29-approved light source differs from the one set forth in the petition, the differences must be understood before a final rule is adopted.

With respect to Type H7, the light source would be known as Type HB6 in the nomenclature of Standard No. 108, indicating that it is the sixth type of replaceable light source permitted by the standard. S7.6 would be amended by adding language appropriate for the HB6 specifications, which would be set forth in a revised Figure 26. In addition to containing specifications for HB6, the proposed revised Figure 26 deletes data that NHTSA regards as redundant and that might have contributed to some confusion regarding the interpretation of the Figure. At least one manufacturer, Valeo Eclairage Signalization of France, has found the present Figure confusing.

Effective Date

The effective date of the final rule would be 30 days after its publication in the **Federal Register.** There is good cause for this early effective date since as the amendment is permissive in nature, and relieves a restriction.

Rulemaking Analyses

Executive Order 12291 (Federal Regulation) and DOT Regulatory Policies and Procedures

NHTSA has considered the impacts of this rulemaking action and has determined that it is not major within the meaning of Executive Order 12291 "Federal Regulation", or significant under Department of Transportation regulatory policies and procedures. Because the H7 is currently in the approval process in Europe, NHTSA does not know the probable cost of the HB6. However, it should be comparable to the HB2 light source, which is based upon another European type, the H4. The proposed rule is permissive in nature. Thus, the effects of the proposed rule are so minimal that preparation of full regulatory evaluation is not necessary.

Regulatory Flexibility Act

The agency has also considered the effects of this proposed rule in relation to the Regulatory Flexibility Act. I certify that this proposed rule would not have a significant effect upon a substantial number of small entities. Lamp and vehicle manufacturers are generally not small businesses within the meaning of the Regulatory Flexibility Act. Further, small organizations and governmental jurisdictions will not be significantly affected as the price of new vehicles, if equipped with headlamps containing HB6 light sources, should not be more than minimally impacted. Accordingly, no Regulatory Flexibility Analysis has been prepared.

National Environmental Policy Act

NHTSA has analyzed this proposed rule for purposes of the National Environmental Policy Act. The rule will not have a significant effect upon the environment as there should be no increase in materials required by the manufacture of a lamp containing an HB6 light source.

Executive Order 12612 (Federalism)

This action has been analyzed in accordance with the principles and criteria contained in Executive Order 12612 "Federalism". It has been determined that the proposed rule does not have sufficient federalism implications to warrant the preparation of a Federalism Assessment.

List of Subjects in 49 CFR Part 571

Imports, Motor vehicle safety, Motor vehicles.

In consideration of the foregoing, it is proposed that 49 CFR part 571 be amended as follows:

PART 571—[AMENDED]

1. The authority citation for part 571 would continue to read as follows:

Authority: 15 U.S.C. 1392, 1401, 1403, 1407 delegations of authority at 49 CFR 1.50.

§ 571.108 [Amended]

2. Section 571.108 would be amended as follows:

(a) Paragraphs S7.7(f), (g), (h), (i), (j), and (k), would be redesignated S7.7(g), (h), (I), (j), (k), and 1 respectively.

(b) New paragraph S7.7(f) would be added to read:

S7.6(f) A Type HB6 light source shall be designed to conform to the dimensions specified in Figure 27. Its maximum power shall be 55.6 watts and its luminous flux shall be 1350 +/−12% lumen.

(c) Figure 8, Bulb Deflection Test, would be amended by adding "HB6" under the column headed "Standardized Replaceable Light Source Type", and by adding " "27.05 +/−0.20 mm (1.06 +/−0.008 in)" under the column headed "dimension 'A' ".

(d) Figure 26, Table of Photometric Requirements, would be revised as follows:

FIGURE 26.—TABLE OF PHOTOMETRIC REQUIREMENTS

[1. Four-Headlamp Systems (4); 2. Two-Headlamp Systems (2)]

Light source type	HB1	HB2	HB3	HB4	HB5	HB6
HB1	Table 1 SAE J579 DEC84 (4, 2).	Fig. 15 (4) Fig. 17 (2)	Fig. 15 (4) Fig. 17 (2)	Fig. 15 (4) Fig. 17 (2)	Table 1 SAE J579 DEC84 (4,2).	Fig. 15 (4) Fig. 17 (2)
HB2		Fig. 15 (4) Fig. 17 (2)	Fig. 15 (4) Fig. 17 (2)	Fig. 15 (4) Fig. 17 (2)	Fig. 15 (4) Fig. 17 (2)	Fig. 15 (4) Fig. 17 (2)
HB3			Fig. 15 (4) Fig. 17 (2)	Fig. 15 (4) Fig. 17 (2)	Fig. 15 (4) Fig. 17 (2)	Fig. 15 (4) Fig. 17 (2)
HB4				Fig. 15 (4) Fig. 17 (2)	Fig. 15 (4) Fig. 17 (2)	Fig. 15 (4) Fig. 17 (2)
HB5					Table 1 SAE J579 DEC84 (4, 2).	Fig. 15 (4) Fig. 17 (2)
HB6						Fig. 15 (4) Fig. 17 (2)

(e) Figure 27, Specification for the HB6 Replaceable Bulb, would be added as follows:

BILLING CODE 4910-59-M

FIGURES 27-1 TO 27-6
TYPE HB6 REPLACEABLE LIGHT SOURCE
DIMENSIONAL SPECIFICATIONS

The drawings are intended only to indicate the essential dimensions of the light source
Dimensions in millimeters

Figure 27-1
Main drawing

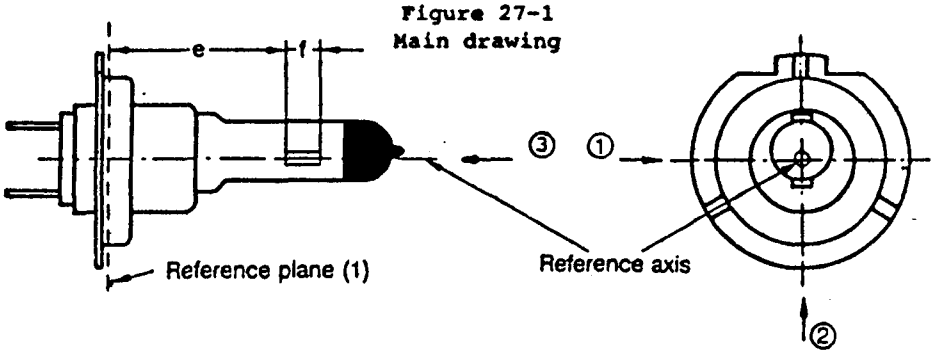

View from ①

View from ③

Figure 27-2
Maximum bulb envelope 3/

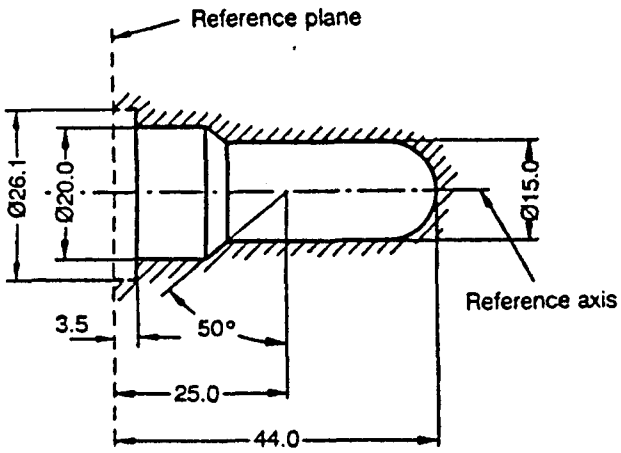

Figure 27-3
Definition of reference axis 2/

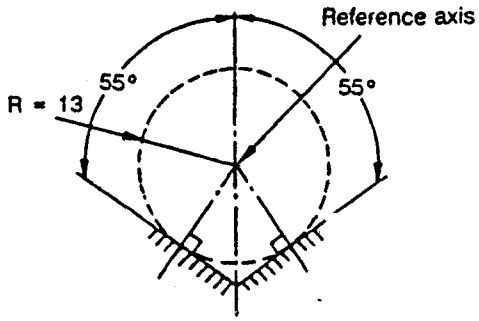

Figure 27-4
Distortion free area 4/ and black top 5/

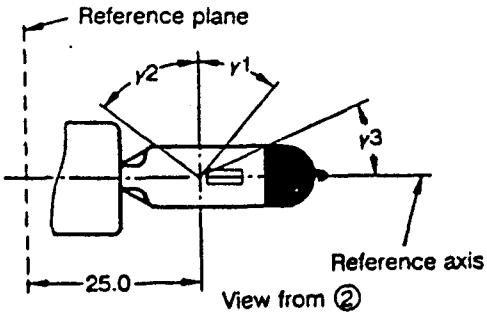

Figure 27-5
Metal free zone 6/

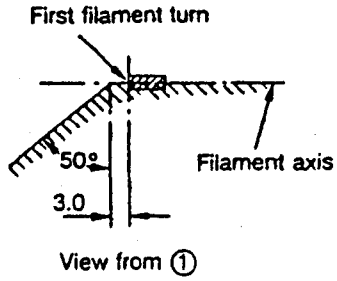

Figure 27-6
Bulb eccentricity 9/

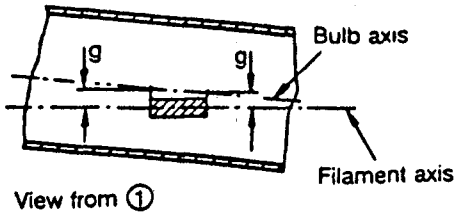

FIGURE 27-7
TYPE HB6 REPLACEABLE LIGHT SOURCE
DIMENSIONAL SPECIFICATIONS AND NOTES

Figure 27-7
Dimensional specifications

Dimensions in mm			
e	7/	25.0	8/
f	7/	4.1	8/
g	9/	0.5	min
$\gamma 1$	4/	40 °	min
$\gamma 2$	4/	50 °	min
$\gamma 3$	4/	30 °	min

Base PX26d in accordance with Figures 27-9 and 27-10

1/ The reference plane is defined by the points on the surfaces of the holder on which the three supporting bosses of the base ring will rest.

2/ The reference axis is perpendicular to the reference plane and crosses the intersection of the two perpendiculars as indicated in Figure 27-3.

3/ Glass capsule and supports shall not exceed the envelope as indicated in Figure 27-2. The envelope is concentric to the reference axis.

4/ Glass bulb shall be optically distortion free within the angles $\gamma 1$ and $\gamma 2$. This requirement applies to the whole bulb circumference within the angles $\gamma 1$ and $\gamma 2$.

5/ The obscuration shall extend at least to angle $\gamma 3$ and shall extend at least to the cylindrical part of the bulb on the whole bulb top circumference.

6/ The internal design of the light source shall be such that stray light images and reflections are only located above the filament itself seen from the horizontal direction. (View ① as indicated in Figure 27-1). No metal parts other than filament turns shall be located in the shaded area as seen in Figure 27-5.

7/ The end of the filaments are defined as the points where, when the viewing direction is direction ① as shown in Figure 27-1, the projection of the outside of the end turns crosses the filament axis.

8/ The filament position shall be checked by means of a "Box System". Figure 27-8.

9/ Offset of filament in relation to bulb axis measured in two planes parallel to the reference plane where the projection of the outside of the end turns nearest to or furthest from the reference plane crosses the filament axis.

10/ Note concerning the filament diameter.
- No actual diameter restrictions apply but the objective for future developments is to have d max. = 1.3 mm.

FIGURE 27-8
TYPE HB6 REPLACEABLE LIGHT SOURCE
SCREEN PROJECTION REQUIREMENTS

This test is used to determine, by checking whether the filament is correctly positioned relative to the reference plane and the reference axis, whether a light source complies with the requirements.

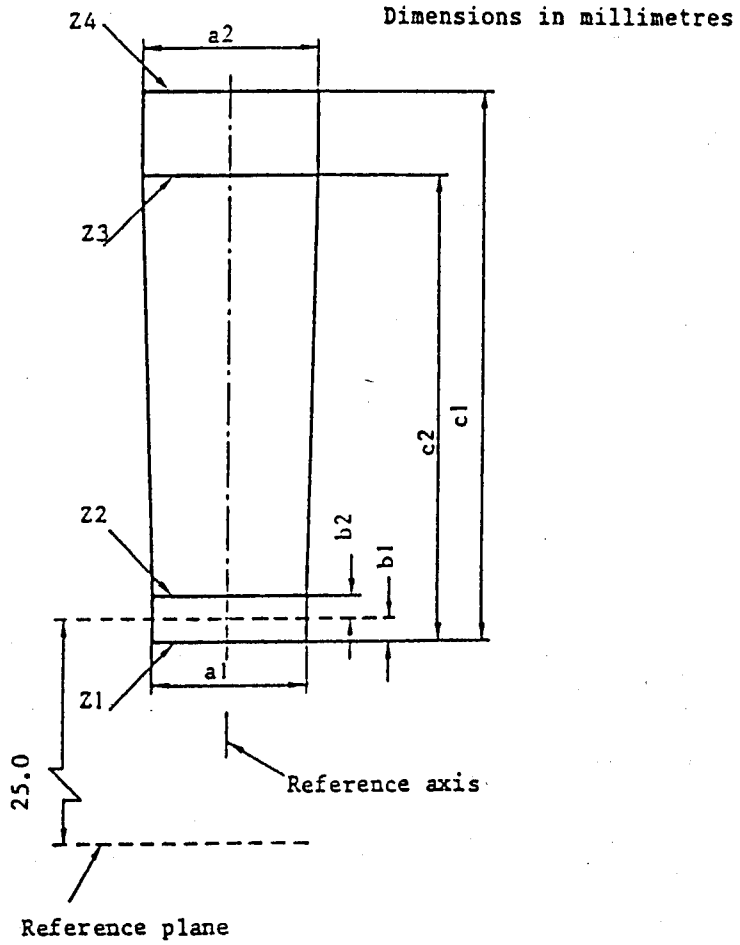

	a1	a2	b1	b2	c1	c2
12V	d + 0.30	d + 0.50	0.2		4.6	4.0

d = diameter of filament

The ends of the filament as defined in Figure 27-7, foot-note 7/, must lie between the lines Z1 and Z2 and between lines Z3 and Z4.

The filament position is checked solely in directions ① and ② as shown in Figure 27-1.

The filament must lie entirely within the limits shown.

FIGURE 27-9
TYPE HB6 REPLACEABLE LIGHT SOURCE
BASE PX26d - DRAWINGS

These drawings are not mandatory. Their sole purpose is to show which dimensions must be verified.

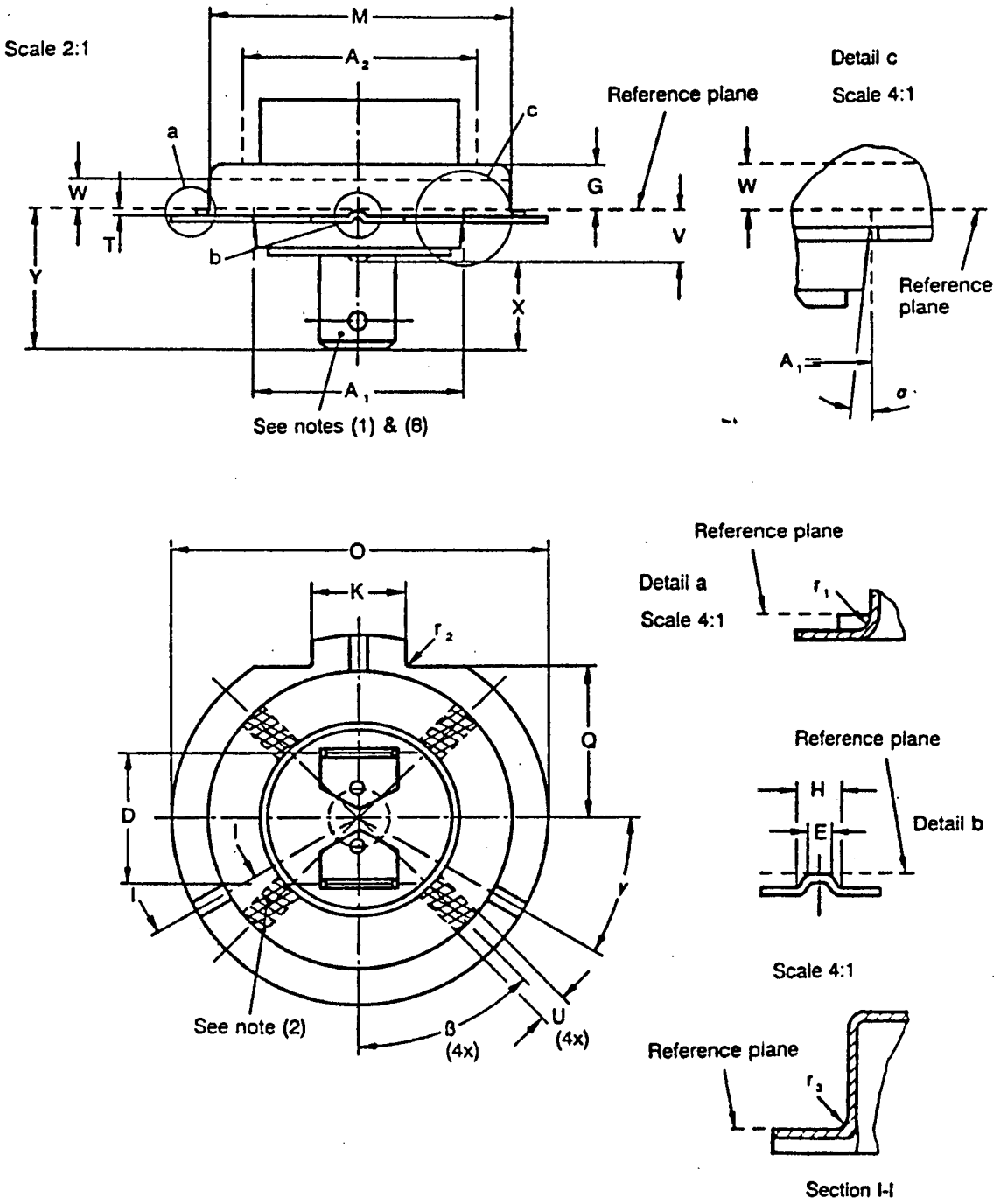

BILLING CODE 4910-59-C

FIGURE 27-10—TYPE HB6 REPLACEABLE LIGHT SOURCE BASE PX26d—DIMENSIONS

[Dimensions in millimeters]

Dimension	Min.	Max.
A_1 (3)	17.8	18
A_2 (4)	20	
D (5)	Nom. 11.5	
E*	1	—
G	—	3.5
H*	—	2
K	7.9	8.0
M	25.9	26.0
O	33.8	34.0
Q	13.2	13.7
T	0.6	0.8
U (2)	2.4	

FIGURE 27-10—TYPE HB6 REPLACEABLE LIGHT SOURCE BASE PX26d—DIMENSIONS—Continued

[Dimensions in millimeters]

Dimension	Min.	Max.
V	6	—
W (6)	2	
X	8	—
Y	—	16
r_1	(7)	
r_2	—	0.3
r_3 (6)	—	0.4
α	—	3°
β (2)	45°	
γ*	29°	31°

*These dimensions are solely for base design and are not to be gauged on finished light source.

(1) For connector tab, see Figure 27-11.

(2) In these areas breaking-throughs or recesses are allowed.

(3) The means of securing the light source in the holder shall be such that no forces in the direction of the reference axis are exerted within this zone.

(4) This dimension delineates the demarcation between the space which may be occupied by parts of the light source and the space which may be occupied by parts of the holder/reflector.

(5) To be checked by means of the gauge shown on sheet . . . (u.c.)

(6) This dimension indicates the minimum height over which the ring shall be cylindrical, with the exception of the areas of transition from the three supporting lugs to cylinder M, where radius r3 applies.

(7) The radius r1 shall be equal to or smaller than dimension T.

(8) The positions of the contact tabs shall not deviate from the position shown by more than ±20°.

BILLING CODE 4910-59-M

FIGURE 27-11
TYPE HB6 REPLACEABLE LIGHT SOURCE
BASE PX26d - CONTACT TAB

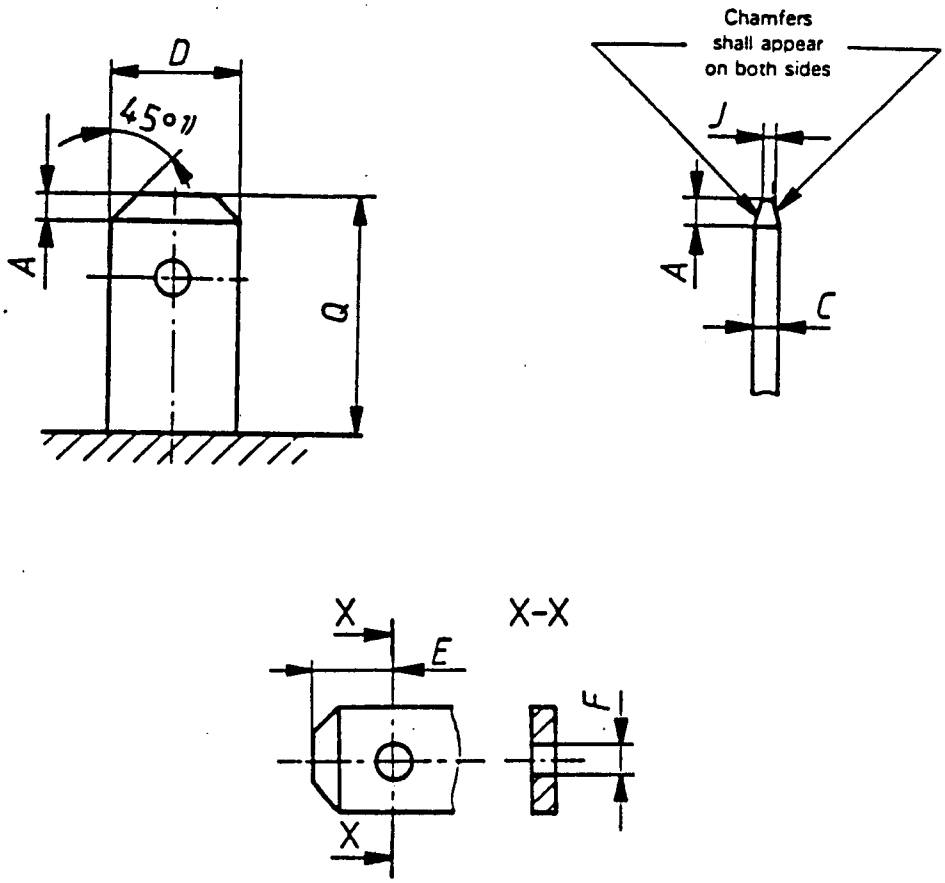

Tab dimensions in mm		
	min.	max.
A	0.5	1.0
C	0.77	0.84
D	6.2	6.4
E	4.0	4.7
F	1.6	2.0
J	0.3	0.5
Q 2)	-	-

1) Bevel A x 45° need not be a straight line but shall not be a concave curve if it is within the confines shown; it may be a radius of A.
2) This dimension is controlled by base dimensions X and Y. (Figure 27-9).

FIGURE 27-12
TYPE HB6 REPLACEABLE LIGHT SOURCE
HOLDER PX26 - DRAWINGS

The drawing is intended only to indicate the dimensions essential for interchangeability.

Scale 2:1

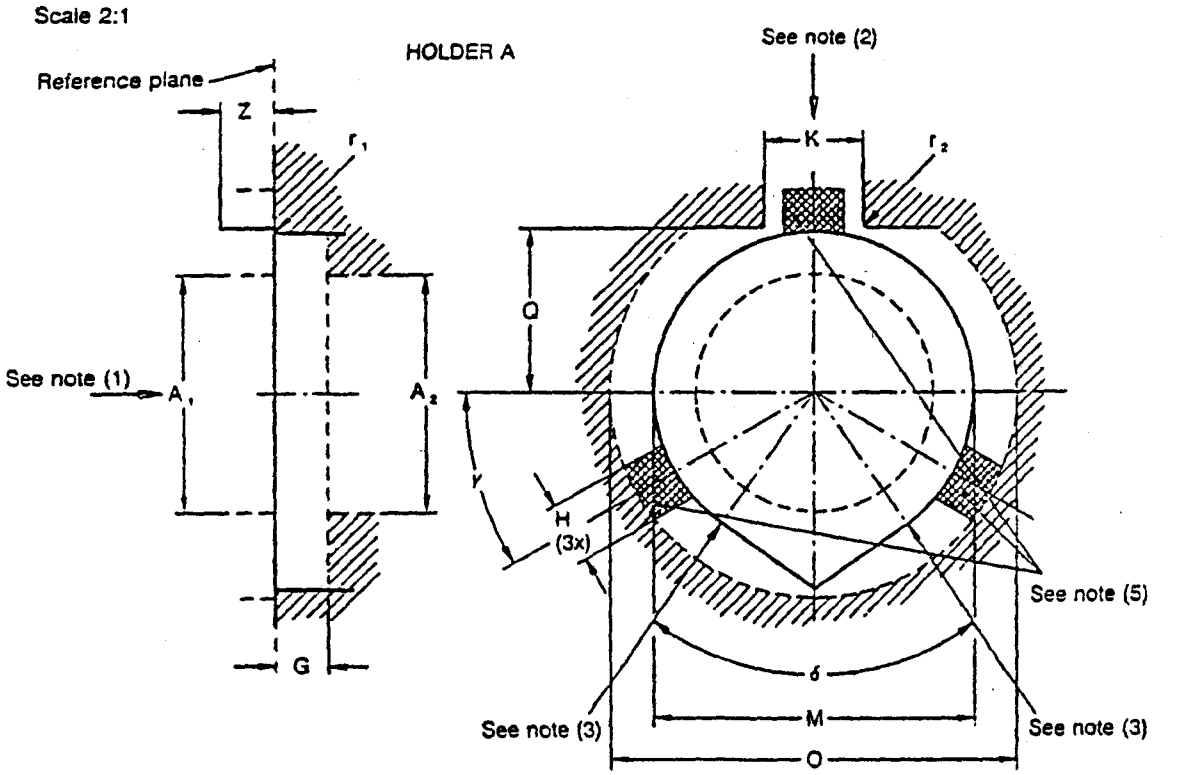

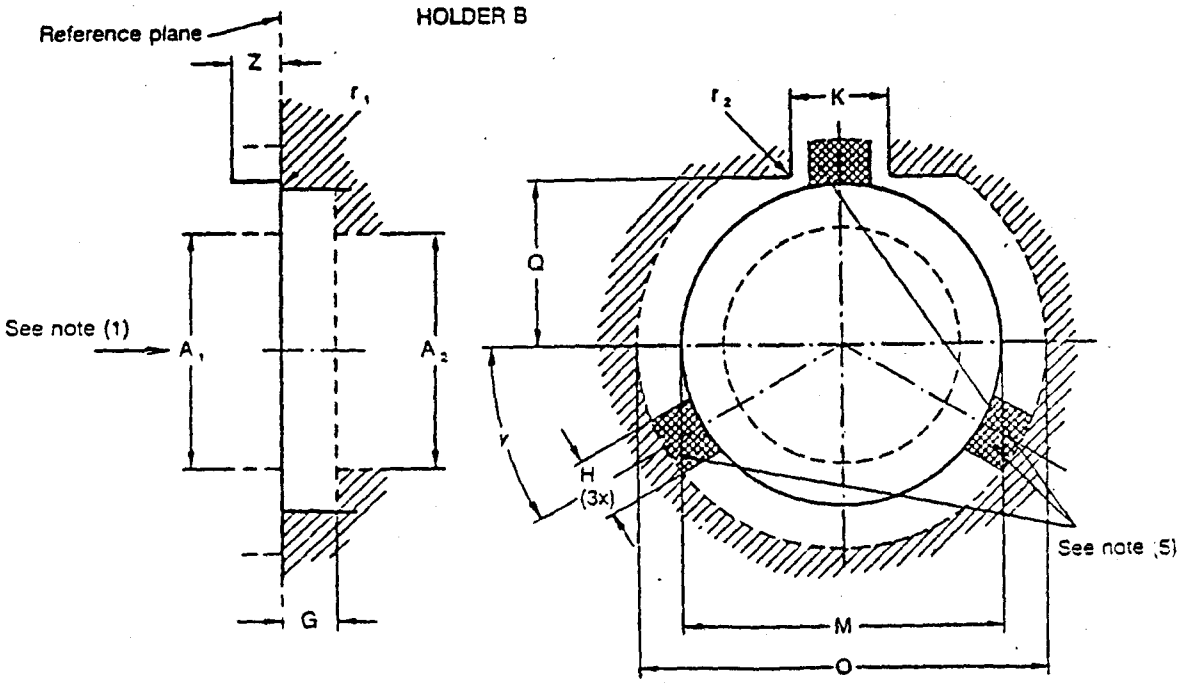

BILLING CODE 4910-59-C

FIGURE 27-13—TYPE HB6 REPLACEABLE LIGHT SOURCE HOLDER PX26—DIMENSIONS AND NOTES

[Dimensions in millimetres]

Dimension	Min.	Max.
A1 (6)	18.5	
A2 (4)	20	
Holder A:		
G	3.6	
H (5)	5	
K	8.1	8.2
M (3)	26.4	26.6
O	35	
Q	13.8	14.0
Z	4.0	
r1	0.45	1.0
r2	0.4	0.6
δ (3)	69.30°	70.30°
	Approx. 30°	
Holder B:		
G	3.6	
H (5)	5	
K	8.1	8.2
M	26.02	26.12
O	35	
Q	13.8	14.0
Z	4.0	
r1	0.45	1.0
r2	0.4	0.6
	Approx. 30°	

(1) The light source shall be inserted in the direction of the arrow (axial direction), bulb first. The force exerted when the light source is in position shall be not less than 15 N and not be greater than 30 N (under consideration). Note for holder A only: This force shall preferably be applied later than the force mentioned in note 2, in order to be sure that the light source is pushed against the resting area for the ring of the base. (See note 3).

(2) Holder A only. The light source shall be pushed in the direction of the arrow (radial direction). The force exerted when the light source is in position shall be not less than 2 N and not be greater than 10 N (under consideration).

(3) Holder A only. Supporting area for the base ring, defined by angle δ and radius M/2.

(4) This dimension delineates the demarcation between the space which may be occupied by parts of the light source and the space which may be occupied by parts of the holder/reflector.

(5) Supporting areas for the supporting bosses of the base, situated at the reference plane.

(6) The means of securing the light source in the holder shall be such that the force in the direction of the reference axis of the light source are exerted within this zone. The holder shall be so designed that the means of retention can only be so designed that the means of retention can only be applied when the light source is in the correct position. The means of retention shall make contact with the base ring.

Issued on: July 17, 1992.

Frederick H. Grubbe,

Deputy Administrator.

[FR Doc. 92-17329 Filed 7-23-92; 8:45 am]

BILLING CODE 4910-59-M

DEPARTMENT OF COMMERCE

National Oceanic and Atmospheric Administration

50 CFR Parts 611 and 685

[Docket No. 920776-2176]

RIN 0648-AE36

Pelagic Fisheries of the Western Pacific Region

AGENCY: National Marine Fisheries Service (NMFS), NOAA, Commerce.

ACTION: Proposed rule.

SUMMARY: The Secretary of Commerce (Secretary) issues this proposed rule to implement Amendment 6 to the Fishery Management Plan for the Pelagic Fisheries of the Western Pacific Region (FMP). The actions proposed by this rule are intended to make the FMP and its implementing regulations consistent with amendments to the Magnuson Fishery Conservation and Management Act (Magnuson Act). The 1990 amendments to the Magnuson Act established exclusive U.S. jurisdiction over fisheries for tuna within the exclusive economic zone (EEZ). Amendment 6 provides that tunas and related species will be included in the fishery management unit for the FMP. Amendment 6 also closes, to foreign vessels fishing for pelagic species, areas of the EEZ that are now closed to domestic longline vessels to prevent gear conflicts and incidental take of protected species. The amendment also applies some of the general foreign fishing regulations, which now apply to foreign longline vessels, to foreign baitboat and purse seine vessels.

DATES: Written comments must be received by September 4, 1992.

ADDRESSES: Copies of Amendment 6, which incorporates an environmental assessment and regulatory impact review, may be obtained from, and comments should be addressed to: Kitty M. Simonds, Executive Director, Western Pacific Fishery Management Council, 1164 Bishop St., suite 1405, Honolulu, HI 96813; or Gary Matlock, Acting Director, Southwest Region, NMFS, 501 W. Ocean Blvd., suite 4200, Long Beach, CA 90802.

FOR FURTHER INFORMATION CONTACT: Kitty M. Simonds, Western Pacific Fishery Management Council, at (808) 523-1368; Svein Fougner, NMFS, at (310) 980-4034; or Alvin Z. Katekaru, NMFS, at (808) 955-8831.

SUPPLEMENTARY INFORMATION: The Western Pacific Fishery Management Council (Council) functions under authority of the Magnuson Act. Until recently, section 102 of the Magnuson Act excluded tuna from the exclusive management authority of the United States. The 1990 amendments to the Magnuson Act provided for the inclusion of tunas, beginning January 1, 1992. In the Pacific, tuna fisheries are to be managed under fishery management plans of the Regional Fishery Management Councils. The Council prepared the FMP for fisheries that take pelagic species other than tunas (i.e., swordfish, marlins, other billfishes, mahimahi, wahoo, and oceanic sharks) in 1986, and regulations were implemented in 1987 (52 FR 5987, February 17, 1987).

Amendment 6 proposes to redefine the Pacific pelagic species management unit by listing genera of tunas, billfishes and associated species, and families of oceanic sharks in the management unit, rather than listing each individual species. In the Western Pacific region, many tunas and related species are taken in the pelagic fisheries. Listing every species to be included in the management unit of the FMP invites potential enforcement problems because of the large number of species caught throughout the Council's area of authority, and the possibility that species not commonly caught at this time will be caught in the future. The Council proposes to include all species in several genera, and would exercise management as authorized by the Magnuson Act. The tunas and related species to be added to the FMP management unit include the genera that contain these species: *Allothunnus fallai, Auxis rochei, A. thazard, Euthynnus affinis, E. lineatus, Gymnosarda unicolor, Katsuwonus pelamis, Scomber japonicus, Thunnus albacares, T. alalunga, T. obesus,* and *T. thynnus.* Each genus contains species that are caught by operators of vessels that fish in or otherwise use waters within the Council's area of authority. Similarly, the management unit will include genera of other species in the management unit (e.g., marlins, swordfish, mahimahi). The use of genus names will obviate the need for changes in the FMP if changes occur in the mix of species taken in the areas covered by the FMP, or as taxonomic changes arise.

The FMP currently prohibits foreign longline vessels from fishing within 12 nautical miles (nm) of Guam and the Hawaiian Islands. Areas up to 150 nm for Guam and the main Hawaiian Islands and up to 100 nm from the Northwestern Hawaiian Islands (NWHI) may be closed to foreign longline vessels if the Director, Southwest

Region, NMFS (Regional Director) determines that fishing by foreign vessels is causing: (1) Adverse impacts on domestic fishery performance, (2) excessive waste of catch, (3) excessive enforcement costs, or (4) adverse effects on stocks.

The FMP currently requires operators of foreign longline vessels to obtain permits before they can fish in the EEZ. These vessels are required to submit vessel activity reports, maintain timely and accurate records, and have a U.S. observer on board when fishing in the EEZ. These requirements are set out in §§ 611.4, 611.8, and 611.9, respectively. Amendment 6 would apply these same requirements to operators of foreign pole-and-line (baitboat) and purse seine vessels. These gear types were not in the fishery management unit under the FMP because they caught almost exclusively tuna, which were excluded from U.S. management authority. The incidental catch of non-tuna species was negligible, so the United States could not assert jurisdiction over vessels using this gear in the EEZ. With the amendments to the Magnuson Act, that exclusion no longer applies, and all foreign tuna fishing vessels are subject to regulation if they fish in the EEZ.

Domestic longline vessels currently are prohibited from fishing in certain areas of the EEZ around Guam and Hawaii to prevent conflicts between operators of longline vessels, troll and handline vessels, and to prevent the incidental take of protected species (e.g., Hawaiian monk seals). To ensure that these objectives are achieved under this proposed rule, the areas closed to U.S. longline fishing vessels would be closed to foreign fishing vessels as well. This closure also may reduce the possibility of localized overfishing and the potential loss of harvesting ability for domestic recreational and commercial fisheries. However, no permits would be issued for foreign longline vessels to fish in the EEZ around Hawaii until at least April 1994 (see below).

Domestic longliners currently are required to notify NMFS when transiting the NWHI protected species zone. The proposed regulations would also require operators of foreign longline vessels to notify NMFS when they intend to transit the NWHI protected species zone. The transit notification burden is expected to be minor.

The FMP contains a moratorium, until April 1994, on the issuance of new permits for domestic longliners authorized to fish around Hawaii. The moratorium requires a domestic longline vessel to hold a limited entry permit to fish for management unit species, or to possess management unit species caught by that vessel, in the EEZ and State waters around Hawaii. Under the Magnuson Act, domestic interests are given priority over foreign interests, and it would be inconsistent to issue permits allowing foreign longline vessels to fish in the EEZ when new domestic fishing effort is being prevented. Therefore, Amendment 6 would prohibit foreign longline fishing in the EEZ around Hawaii while the moratorium is in effect.

The proposed rule would continue to prohibit foreign longliners operating in the "non-retention zone" around the main Hawaiian Islands from (1) retaining billfish, oceanic sharks, wahoo, or mahimahi; and (2) removing billfish or oceanic sharks from the water. The non-retention zone would continue to extend seaward to 100 nm from the islands, but because the shoreward boundaries of the zone are contiguous with the closed areas, the zone would be narrowed to the extent that the closed areas are expanded. The non-retention zone around Guam, which extends to 50 nm from the island, would be abolished because it would be subsumed by the proposed expansion of the closed area. The regulations governing fishing in the non-retention zone would not restrict longlining for the newly included genera of tuna and related species. Amendment 6 does not propose to subject foreign purse seiners and baitboats to the existing non-retention zone for foreign longliners because the incidental catch of associated species by these gear types is small.

No new management measures would be imposed on domestic longliners or other domestic gears (e.g., purse seine, baitboat, troll, handline), so there would be no impacts on domestic fishermen.

The FMP currently contains specifications of domestic annual harvest (DAH) and total allowable level of foreign fishing (TALFF) in non-numeric terms. They are specified to be the amounts of pelagic non-tuna that can be harvested and retained in accordance with the conservation and management measures in the FMP. Amendment 6 proposes that DAH and TALFF for tuna and related species be specified in the same non-numeric manner. There is no basis for setting numerical limits on effort or catch in the EEZ at this time for either domestic or foreign vessels.

In summary, under Amendment 6, tunas and related species would be included in the FMP, providing clear authority for the Council and NMFS to manage all pelagic fishing activities in the region. The definition of overfishing for tunas would guide the selection of conservation and management measures to promote the long-term viability of the management unit stocks. Because of the large (perhaps Pacific-wide) population boundaries of most of the Pacific pelagic management unit species (including the main tuna species), preventing the overfishing of entire stocks, including those within the EEZ, may require regional or international management. There is little information on the status of minor species, but including them in the management unit would allow the Council and NMFS to collect data and analyze the impacts of fishing on their populations.

Classification

Section 304(a)(1)(D) of the Magnuson Act requires the Secretary to publish regulations proposed by a Council within 15 days of receipt of the amendment and regulations. At this time, the Secretary has not determined that Amendment 6 is consistent with the national standards, other provisions of the Magnuson Act, and other applicable law. In making that determination, the Secretary will take into account the data, views, and comments received during the comment period.

The Council prepared an environmental assessment (EA) for this amendment that discusses the impact on the environment as a result of this rule. A copy of the EA is available from the Council (see "ADDRESSES").

The Assistant Administrator for Fisheries, NOAA, has determined that this proposed rule is not a "major rule" requiring a regulatory impact analysis under Executive Order 12291. The rule would have no impacts on domestic fishing vessels, as no new regulations are proposed to limit their activities. The regulations affecting foreign vessels would have slight or no impacts, depending on the amount of foreign fishing that results. There has been little legal foreign fishing for tuna or other pelagics in the EEZ since enactment of the Magnuson Act, and little or no foreign fishing is expected as a result of this amendment. The Council incorporated a regulatory impact review in Amendment 6, which may be obtained from the Council (see "ADDRESSES").

The General Counsel of the Department of Commerce certified to the Small Business Administration that this proposed rule, if adopted, will not have a significant economic impact on a substantial number of small entities. No new regulations would apply to domestic interests. Little or no foreign fishing is expected as a result of these regulations, thus, there will be little

impact on foreign firms. Therefore, a regulatory flexibility analysis was not prepared.

This proposed rule is exempt from the procedures of Executive Order 12291 under section 8(a)(2) of that order. Deadlines imposed under the Magnuson Act, as amended, require the Secretary to publish this proposed rule 15 days after its receipt. The proposed rule is being reported to the Director, Office of Management and Budget (OMB), with an explanation of why it is not possible to follow procedures of the order.

This rule contains a collection-of-information requirement (transit notification in the protected species zone for foreign longline vessels) subject to the Paperwork Reduction Act. A request for approval of this collection-of-information has been submitted to OMB. Operators of foreign vessels would be required to notify the NMFS Enforcement Office immediately upon entering the exiting the NWHI closed area (protected species zone). The public reporting burden for individual operators is estimated to be less than 5 minutes for the pre-transit notification and 5 minutes for the post-transit notification. The total burden is expected to be minor because most foreign vessels do not presently pass through the protected species zone. In addition, all operators of foreign vessels that fish for tuna and related species in the EEZ would be required to record and submit data on their catch and effort in the EEZ. This total burden is also expected to be light because few, if any, vessels are expected to fish in the EEZ. The estimated burden per vessel is 5 minutes per day for the operator to copy this information onto the U.S. log. Send comments regarding these burden estimates or any other aspect of this collection of information, including suggestions for reducing this burden, to NMFS (see **ADDRESSES**") and to the Office of Information and Regulatory Affairs, Office of Management and Budget, Washington, DC 20503 [Attn. NOAA Desk Officer].

The Council has determined that this proposed rule will be implemented in a manner that is consistent to the maximum extent practicable with the approved coastal management programs of American Samoa, Guam, and Hawaii. This determination was submitted to the respective island government agencies with coastal zone management responsibilities for review. All of the agencies have concurred with this determination.

The Council assessed the potential impacts of the proposed rule on endangered and threatened species and their habitat and concluded that the proposed rule is not likely to adversely affect any endangered or threatened species, nor will it adversely affect any critical habitat of any listed species. On May 22, 1992, NMFS concurred with this conclusion and has determined that no further consultations are necessary under the Endangered Species Act.

This proposed rule does not contain policies with federalism implications sufficient to warrant preparation of a federalism assessment under Executive Order 12612.

List of Subjects

50 CFR Part 611

Fisheries, Foreign relations, Reporting and recordkeeping requirements.

50 CFR Part 685

American Samoa, Fisheries, Fishing, Guam, Hawaiian Natives, Northern Mariana Islands.

Dated: July 17, 1992.

Samuel W. McKeen,

Acting Assistant Administrator for Fisheries, National Marine Fisheries Service.

For the reasons set out in the preamble, chapter VI of title 50 of the Code of Federal Regulations is proposed to be amended as follows:

PART 611—FOREIGN FISHING

1. The authority citation for part 611 continues to read as follows:

Authority: 16 U.S.C. 1801 *et seq.*, 16 U.S.C. 971 *et seq.*, 22 U.S.C. 1971 *et seq.*, and 16 U.S.C. 1361 *et seq.*

2. In § 611.2, the definition of "highly migratory species" is removed and the definition of "fish (when used as a noun)" is revised to read as follows:

§ 611.2 Definitions.

* * * * *

Fish (when used as a noun) means finfish, mollusks, crustaceans, and all other forms of marine animal and plant life other than marine mammals and birds.

* * * * *

Appendix A to Subpart A—[Amended]

3. In Table 1 to appendix A of subpart A of part 611, the entry in the first column for "Director, Southwest Region, National Marine Fisheries Service" is revised to read "Director, Southwest Region, National Marine Fisheries Service, NOAA, 501 West Ocean Boulevard, suite 4200, Long Beach, CA 90802–4213; Telephone (310) 980–4001".

3a. In Table 2 to appendix A of subpart A of part 611, the entry in the second column for "Pacific Billfish, Oceanic Sharks, Wahoo, and Mahimahi Fishery" is revised to read "Pacific Pelagic Species Fishery".

3b. In Table 4 to appendix A of subpart A of part 611, the entry in the first column for "Pacific Billfish, Oceanic Sharks, Wahoo, and Mahimahi Fishery" is revised to read "Pacific Pelagic Species Fishery".

4. In the table to appendix D to subpart A of part 611, the following species codes and associated genera are added in numerical order to section B. of the table to read as follows:

Appendix D to Subpart A—Species Codes

Code	Common name [1]	Scientific name
*	*	*
	B. Pacific Ocean Fishes	
	Finfish	
*	*	*
257	Chub (Pacific) mackerel.	*Scomber japonicus.*
*	*	*
272	Albacore	Thunnus alalunga.
278	Bigeye tuna	*Thunnus obesus.*
280	Bluefin tuna	*Thunnus thynnus.*
282	Skipjack tuna	*Katsuwonus pelamis.*
284	Yellowfin tuna	*Thunnus albacares.*
289	Other tunas and related species.	*Allothunnus fallai, Auxis rochei, Auxis thazard, Euthynnus affinis, Euthynnus lineatus, Gymnosarda unicolor.*
*	*	*

[1] (NS) means non-specific as to species. This code must be used for all species of this species group unless a more specific code exists.

5. In § 611.81, the section heading, paragraphs (a), (b), (c), (j)(2) including Table 1, (j)(3), and (j)(4) text preceding Table 2 are revised; paragraph (h)(4) is removed; and new paragraphs (j)(9) and (j)(10) are added to read as follows:

§ 611.81 Pacific pelagic species fishery.

(a) *Purpose and scope.* This section regulates all foreign fishing for Pacific pelagic management unit species conducted under a GIFA within the EEZ in the Pacific Ocean except that part of the EEZ off Alaska. Regulations governing domestic vessels fishing for Pacific pelagic management unit species in these waters appear in part 685 of this chapter.

(b) *Definitions.* For the purposes of this section, these terms have the following meanings:

Billfish means broadbill swordfish (*Xiphias gladius*), blue marlin (*Makaira mazara*), black marlin (*Makaira indica*), striped marlin (*Tetrapturus audax*), sailfish (*Istiophorus platypterus*), and shortbill spearfish (*Tetrapturus angustirostris*).

Closed area means that area of the EEZ in which foreign fishing vessels

fishing for Pacific Pelagic management unit species are prohibited from fishing.

Drift gill net means a floating rectangular net with one or more layers of mesh that is set vertically in the water.

Longline gear means a type of fishing gear consisting of a main line of any length that is suspended horizontally in the water column either anchored, floating, or attached to a vessel, and from which branch or dropper lines with hooks are attached.

Mahimahi means "dolphin fish" (Coryphaena hippurus and *Coryphaena Equisetis*).

Non-retention zone means that area of the EEZ in which all billfish, oceanic sharks, wahoo, and mahimahi caught by longline gear from an FFV must be returned to the sea in accordance with the requirements of paragraph (j)(4) of this section.

Northwestern Hawaiian Islands (NWHI) means the portion of the EEZ around Hawaii west of 161° W. longitude.

Oceanic sharks means sharks of the families *Carcharhinidae, Alopiidae, Sphyrnidae,* and *Lamnidae.*

Pacific pelagic management unit species has the identical meaning to the term as defined in part 685 of this chapter.

Protected species zone has the identical meaning to the term as defined in part 685 of this chapter.

Regional Director means the Director, Southwest Region, National Marine Fisheries Service, 501 W. Ocean Blvd., suite 4200, Long Beach, CA 90802–4213, telephone (310) 980–4001, or a designee.

Retention zone means that area of the EEZ in which an FFV may be used to retain Pacific pelagic management unit species to the extent that retention is authorized by this section.

Wahoo means fish of the species *Acanthocybium solandri.*

(c) *Permits.* Each FFV that fishes for Pacific Pelagic management unit species in the EEZ must have a permit issued under § 611.3.

* * * * *

(j) * * *

(2) *Zones.* The FMP Management Area Group comprises the following closed areas, non-retention zones, and retention zones (unless otherwise noted, the boundaries are measured from the baseline used to measure the territorial sea) described in Table 1 of this paragraph.

TABLE 1

Management area	Closed area	Non-retention zone	Retention zone
Hawaiian Islands	(1) Within the longline fishing prohibited area around Hawaii (see 50 CFR part 685); and (2) Within the NWHI protected species zone (see 50 CFR part 685).	(1) Between the seaward boundary of the longline fishing prohibited area around Hawaii and 100 nautical miles from the islands of Hawaii, Maui, Lanai, Kahoolawe, Molokai, Oahu, Kauai, Niihau, and Kaula.	(1) Beyond 100 nautical miles from the islands of Hawaii, Maui, Lanai, Kahoolawe, Molokai, Oahu, Kauai, Niihau, and Kaula; and (2) Beyond the NWHI protected species zone.
Guam	Within the longline fishing prohibited area around Guam (see 50 CFR part 685).	None	Seaward of the longline fishing prohibited area around Guam.
American Samoa.	(1) Within a rectangle around the Tutuila and Manua Islands of American Samoa bounded by 14° and 15° S. latitude and 168° and 171° W. longitude; and (2) Within a 1-degree square surrounding Swain's Island bounded by 10° 33′ and 11° 33′ S. latitude and 170° 34′ and 171° 34′ W longitude.	None	Areas of the EEZ outside the rectangle bounded by 14° and 15° S. latitude and 168° and 171° W. longitude; and (2) Areas of the EEZ outside the 1-degree square surrounding Swain's Island.
U.S. Possessions.	Within 12 nautical mile from shore.	None	Beyond 12 nautical miles from shore.

(3) *Effort plans.* Operators of foreign fishing vessels subject to this subpart who desire to fish in the FMP Management Area Group are required to file effort plans 2 months prior to entering the retention zones of the EEZ for fishing purposes. Effort plans must indicate the dates when fishing is expected to begin and cease and must specify the areas of the EEZ where the vessels intend to operate. Effort plans must be submitted to the Regional Director.

(4) *Catch restrictions.* (i) There is no limit on the amount of Pacific pelagic management unit species that may be caught by an FFV in the retention zones described in Table 1 of paragraph (j)(2) of this section.

(ii) No FFV may be used with longline gear to catch and retain Pacific billfish, oceanic sharks, mahimahi, or wahoo within the non-retention zone set out in Table 1 of paragraph (j)(2) of this section.

(iii) Unless otherwise specifically instructed by a U.S. observer or authorized officer, all billfish and oceanic sharks harvested by an FFV using longline gear in the non-retention zone must be released by cutting the line (or by other appropriate means) without removing the fish from the water.

(iv) No FFV may fish for Pacific pelagic management unit species in the closed areas set out in Table 1 of paragraph (j)(2) of this section.

* * * * *

(9) *Moratorium on new longline permits for Hawaii EEZ.* No permit to fish in the EEZ around Hawaii will be issued to an FFV using longline gear during the moratorium on domestic longline permits set forth at § 685.15 of this chapter.

(10) *Transit notification.* The operator of an FFV with longline gear transiting the protected species zone, as defined in part 685 of this chapter, must notify the NMFS Southwest Enforcement Office at (808) 541–2727, or as otherwise advised by NMFS Enforcement, immediately upon entering and immediately upon departing the protected species zone. The notification must include the name of the vessel, name of the operator, date and time (GMT) of entry or exit from the zone, and location by latitude and longitude to the nearest minute.

* * * * *

§ 611.81 [Amended]

6. In § 611.81, in paragraphs (j)(5)(i), (j)(5)(ii), (j)(5)(iv), (j)(6)(ii), and (j)(6)(iv), the words "management unit species" are removed and the words "Pacific pelagic management unit species" are added in their place.

PART 685—PELAGIC FISHERIES OF THE WESTERN PACIFIC REGION

1. The authority citation for part 685 continues to read as follows:

Authority: 16 U.S.C. 1801 *et seq*

2. In § 685.1, paragraphs (a) and (b) are revised to read as follows:

§ 685.1 Purpose and scope.

(a) The regulations in this part govern the conservation and management of Pacific pelagic management unit species in the exclusive economic zone (EEZ) in the Pacific Ocean, excluding the portions of the EEZ seaward of Alaska, Washington, Oregon, and California.

(b) Regulations governing fishing for Pacific pelagic management unit species by fishing vessels other than vessels of the United States appear in 50 CFR part 611, subpart F.

* * * * *

3. In § 685.2, the definitions of "Associated species", "Billfish", and "Management unit species" are removed, and a new definition of "Pacific pelagic management unit species" is added in alphabetical order to read as follows:

§ 685.2 Definitions.

* * * * *

Pacific pelagic management unit species means the following fish:

Common Name	Scientific Name
Mahimahi (dolphin fish)	*Coryphaena* spp.
Marlin and Spearfish	*Makaira* spp.
	Tetrapturus spp.
Oceanic Sharks	Family Alopiidae
	Family Carcharhinidae
	Family Lamnidae
	Family Sphyrnidae
Sailfish	*Istiophorus* sp.
Swordfish	*Xiphias* sp.
Tuna and related species.	*Allothunnus* sp.
	Auxis spp.
	Euthynnus spp.
	Gymnosarda spp.
	Katsuwonus spp.
	Scomber spp.
	Thunnus spp.
Wahoo	*Acanthocybium* sp.

* * * * *

§ 685.4 [Amended]

4. In § 685.4, in paragraphs (b)(7), (b)(8), and (c)(9), the words "billfish, tuna, oceanic sharks, and associated fish" are removed and the words "Pacific pelagic management unit species" are added in their place.

§§ 685.5 and 685.8 [Amended]

5. In addition to the amendments set forth above, in 50 CFR part 685 remove the words "billfish or associated species" and add, in their place, the words "Pacific pelagic management unit species" in the following places:

a. § 685.5 (a) and (b); and

b. § 685.8(a).

§§ 685.2, 685.4, 685.5, 685.9, 685.13, 685.15, and 685.25 [Amended]

6. In addition to the amendments set forth above, in 50 CFR part 685, remove the words "management unit species" and add, in their place, the words "Pacific pelagic management unit species" in the following places:

a. § 685.2, in the definition of "fish dealer";

b. § 685.4(a);

c. § 685.5(d), (e), (f), (g), (n), (o), and (r);

d. § 685.9(a);

e. § 685.13;

f. § 685.15(a), (c)(1), and (c)(2); and

g. § 685.25(a)(2), (a)(3), and (a)(4).

7. Section 685.22 is revised to read as follows:

§ 685.22 Annual report.

By June 30 of each year, a plan team appointed by the Council will prepare an annual report on the domestic and foreign fisheries for Pacific pelagic management unit species in the management area.

§ 685.23 [Amended]

8. In § 685.23, remove the words "billfish and associated species" and add, in their place, the words "Pacific pelagic management unit species".

[FR Doc. 92-17376 Filed 7-21-92; 11:13 am]

BILLING CODE 3510-22-M

50 CFR Part 640

[Docket No. 920661-2161]

Spiny Lobster Fishery of the Gulf of Mexico and South Atlantic

AGENCY: National Marine Fisheries Service (NMFS), NOAA, Commerce.

ACTION: Proposed rule.

SUMMARY: NMFS proposes to amend the regulations that implement the Fishery Management Plan for the Spiny Lobster Fishery of the Gulf of Mexico and South Atlantic (FMP). This proposed rule would: (1) Adopt in the exclusive economic zone (EEZ) off Florida, Florida's spiny lobster trap certificate, trap reduction, and trap identification programs; (2) require that divers measure spiny lobsters harvested in the EEZ while in the water; (3) require in the EEZ the same number size for marking spiny lobster trap buoys as in required in Florida's waters; (4) restrict divers who harvest spiny lobsters in the EEZ at night to the bag limit; (5) specify diving and use of a bully net, hoop net, and trap as the only authorized method/gears in the EEZ in a directed fishery for spiny lobster; (6) establish a catch limit of 5 percent, by weight, of all fish aboard for the incidental harvest of spiny lobsters by trawls in the EEZ; (7) standardize the Florida and Federal size limit for spiny lobster traps used in the EEZ off Florida; (8) reduce the number of undersized spiny lobsters that may be retained in the EEZ for use as attractants in traps to 50 per vessel, or one per trap on board, whichever is greater; and (9) otherwise simplify and clarify the regulations and conform them to current usage. The intended effects of this rule are to enhance cooperative Florida/Federal management of the spiny lobster fishery, reduce management costs, improve effectiveness of necessary regulations, and protect the valuable spiny lobster resource.

DATES: Written comments must be received on or before August 13, 1992.

ADDRESSES: Copies of documents supporting this action may be obtained from the Gulf of Mexico Fishery Management Council, 5401 West Kennedy Boulevard, suite 331, Tampa FL 33609.

Comments on the proposed rule should be sent to Michael E. Justen, NMFS, Southeast Regional Office, 9450 Koger Boulevard, St. Petersburg, FL 33702.

FOR FURTHER INFORMATION CONTACT: Michael E. Justen, 813-893-3161.

SUPPLEMENTARY INFORMATION: The spiny lobster fishery of the Gulf of Mexico and South Atlantic is managed under the FMP, prepared and amended by the Gulf of Mexico and South Atlantic Fishery Management Councils (Councils), and its implementing regulations at 50 CFR part 640, under the authority of the Magnuson Fishery Conservation and Management Act (Magnuson Act).

The FMP, as amended, contains a regulatory amendment procedure for implementing specified gear and harvest restrictions applicable to the spiny lobster fishery in the EEZ. The intended effects of that procedure include: (1) Providing a more flexible and timely system for implementing regulations on the spiny lobster fishery; (2) enhancing cooperative Florida/Federal management of the fishery; (3) reducing Federal management costs; and (4) improving the effectiveness of necessary rules. In accordance with that regulatory amendment procedure, the Florida Marine Fisheries Commission (FMFC) has requested the Director, Southeast Region, NMFS (Regional Director), to implement in the EEZ, with the Councils' oversight, modifications to certain gear and harvest limitations that were proposed by the FMFC and approved by

the Governor and Cabinet of Florida for implementation in Florida's waters.

Specifically, the FMFC requests adoption in the EEZ off Florida of (1) Florida's spiny lobster trap certificate, trap reduction, and trap identification programs; (2) the requirement that divers measure spiny lobsters in the water; (3) the same required number size for marking spiny lobster trap buoys as is required in Florida's waters; (4) the application of the bag limit to all harvests of spiny lobsters by diving at night; (5) the specification of diving, bully net, hoop net, and traps as the only authorized fishing method/gears in a directed fishery for spiny lobster; (6) a catch limit for incidental harvest of spiny lobsters by trawls of 5 percent, by weight, of all fish aboard; (7) Florida's spiny lobster trap construction requirements; and (8) a reduction in the number of undersized spiny lobsters that may be retained for use as attractants in traps to 50 per vessel, or one per trap on board, whichever is greater. It is the desire of the FMFC that these changes be implemented before the start of the fishing season on August 6, 1992.

The objectives of Florida's trap certificate and reduction program are to (1) reduce the number of traps used in the fishery to the lowest amount that will maintain or increase total catch levels; (2) promote economic efficiency in the fishery; and (3) conserve natural resources. Based on historic catch and effort statistics, the number of traps that will achieve optimum yield ranges from 172,000 to 375,000.

Under the trap reduction program, the Florida Department of Natural Resources (FDNR) will issue spiny lobster trap certificates and tags. Commencing with the 1993–94 season, FDNR will set the maximum number of traps allowed in the commercial spiny lobster fishery and will issue trap certificates and tags accordingly. The number of certificates and tags that will be issued is estimated at 750,000. Florida law mandates 700,000 tags with up to 50,000 additional available from the FDNR Appeals Board. The FMFC has established a trap reduction program for the Commercial fishery whereby the number of commercial traps allowed in the fishery may be reduced by up to 10 percent each year. Catch and effort will be monitored to assess the progress of the effort reduction.

In addition to the traps allowed in the commercial spiny lobster fishery, commencing with the 1993–94 season, Florida will allow up to three traps per recreational fisherman, provided such fisherman holds a recreational saltwater fishing license with a crawfish (spiny lobster) stamp. As with the commercial traps, recreational traps must have affixed a trap tag issued by the FDNR and must otherwise be properly identified.

To achieve the objectives of Florida's trap reduction program, this rule proposes that all traps used in the EEZ off Florida must have spiny lobster traps, tags issued by Florida and that spiny lobster trap, vessels, and buoys in the EEZ off Florida must otherwise be identified as required by Florida's regulations. NMFS would rely on Florida permitting system for identifying spiny lobster traps, vessels, and buoys used in the EEZ off Florida.

Adoption of Florida's trap reduction program in the EEZ off Florida meets the FMP's management objectives of protecting long-run yields from the fishery and preventing depletion of spiny lobster stocks, while increasing yield by weight from the fishery.

Florida's regulations require that lobsters harvested by divers in its waters be measured while in the water. The FMFC believes that this practice lessens stress and reduces mortality on spiny lobsters that are not of legal size. This rule would require divers in the EEZ to possess and use a measuring device in the water and to release undersized spiny lobster without removal from the water. This action would increase yield by weight from the fishery and meet the FMP's management objective of protecting longrun yields from the fishery.

Current Federal regulations require that all spiny lobster trap buoys in the EEZ be identified by the owner's Florida or Federal number with numbers at least 3 inches (7.62 cm) high. Florida requires numbers at least 2 inches (5.08 cm) high. As requested by the FMFC, this rule proposes to change the EEZ requirement to a 2-inch (5.08-cm) minimum. In addition, NMFS proposes to adopt in the EEZ off Florida, Florida's requirements applicable to the marking of commercial vessels that harvest spiny lobsters by diving. Uniform identification requirements would simplify enforcement, enhance cooperative management, and improve the effectiveness of necessary rules.

Florida's regulations prohibit the harvest of spiny lobsters in excess of the bag limit by diving at night. The FMFC believes that this discourages the practice of diving to rob commercial traps. This rule proposes to adopt Florida's prohibition in the EEZ. This action would meet the FMP's management objectives of reducing user group and gear conflicts in the fishery, enhancing cooperative management, and improving the effectiveness of necessary rules.

Florida's regulations establish diving, bully net, hoop net, and traps as the only allowable method/gears for commercial harvest of spiny lobster in its waters. Under Florida's regulations, a directed fishery for spiny lobster by trawls is prohibited; however, incidental catch in trawls is allowed if the whole weight of retained lobster does not exceed 5 percent of the total weight of all fish lawfully in possession on board the vessel. Harvesting by trawl has the potential of injury to the lobster by crushing and breaking antennae and appendages, which can contribute to mortality or retard growth. This rule would standardize Florida and Federal regulations regarding allowable method/gears and incidental catch limits. However, because Federal regulations allow the possession, in certain cases, of separated spiny lobster tails, an alternative weight precenage must be provided for such cases. NMFS proposes that, on board a vessel that harvests spiny lobster by net or trawl, and lawfully possesses a separated spiny lobster tail, the weight of spiny lobster, or parts thereof, may not exceed 1.6 percent of the total weight of all fish lawfully in possession on board such vessel. The alternate percentage of 1.6 is based on the ratio of legal-sized spiny lobster whole weight to tail weight of 3.125 to 1 ($5\% \div 3.125 = 1.6\%$). The proposed standardization of allowable method/gears in the directed fishery for spiny lobster would meet the management objectives of reducing user group and gear conflicts in the fishery, protecting long-run yields, preventing depletion of lobster stocks, and increasing weight from the fishery.

The FMFC originally requested that all of Florida's trap construction requirements be adopted in the EEZ. However, the South Atlantic Fishery Management Council objected to inclusion of that portion of Florida's trap construction requirements that would ban use in the EEZ of the standard wire mesh trap measuring no larger in dimension than 3 feet by 2 feet by 2 feet (91.4 centimeters by 61.0 centimeters by 61.0 centimeters). The FMFC and the Gulf of Mexico Fishery Management Council have agreed to revise the original request so that standard wire mesh traps may continue to be used in the EEZ. Accordingly, this rule would revise the trap construction requirements applicable in the EEZ only to the extent of adding the maximum trap size limitation contained in Florida's regulations.

Florida's regulations allow for the possession of no more than 50 undersized spiny lobsters (shorts) per vessel, or one short per trap aboard the vessel, whichever is greater, for use as attractants in traps. The FMFC believes that this allowable number of shorts has helped to alleviate excessive mortality of undersized lobster, thus reducing pressure on the population and increasing yield. This rule would reduce the number of shorts allowed to be possessed in the EEZ from 100 to 50, or one per trap, whichever is greater. This action would decrease mortality; simplify enforcement; and meet the FMP's management objectives of protecting long-run yields, preventing depletion of lobster stocks, and increasing yield by weight from the fishery.

As required by the regulatory amendment procedure of the FMP, the Regional Director has preliminarily concluded that the modifications to the gear and harvest limitations requested by the FMFC are consistent with the scope and procedures of the management measures that may be implemented under that procedure and with the objectives of the FMP. Further, the Regional Director has preliminarily concluded that application of the spiny lobster trap reduction program and the trap and diving identification requirements are appropriately limited to the EEZ off Florida.

In addition to the changes requested by the FMFC or related to those changes, NMFS proposes to (1) remove from the regulations definitions no longer needed; (2) revise and add definitions as appropriate to conform them to those contained in Florida's statutes and regulations; (3) revise the permitting requirements to conform them, to the extent possible, to the Federal permitting requirements in other fisheries; and (4) otherwise simplify and clarify the regulations.

Specifically, this rule would clarify that a fee is charged for each application for a permit, rather than for each permit issued. Most of NMFS's costs in administering the permit system are incurred in processing applications, rather than in issuing permits. The Magnuson Act authorizes a level of fees not exceeding the administrative costs of processing applications and issuing permits. At least annually, NMFS computes its costs in accordance with the NOAA Finance Handbook. Costs vary based on such things as increases in Federal salaries/overhead and reductions due to improved efficiency in the permitting system. This rule would remove specification of the fees from the regulations. The amounts of the fees that must be remitted with each application would be specified by NMFS with the application forms. Based on current administrative costs, the fee for each application for a permit is $34 and for a replacement permit is $7. The current fees specified in the regulations are $26 and $0, respectively.

Also, to enforce effectively the existing prohibition on use of explosives to take spiny lobsters, NMFS proposes to prohibit the possession in the EEZ of dynamite or a similar explosive substance aboard a vessel in the spiny lobster or slipper lobster fishery. NMFS is not aware of any legitimate use of dynamite or a similar explosive substance aboard a vessel in the fishery.

Classification

The Assistant Administrator for Fisheries, NOAA (Assistant Administrator), has initially determined that this proposed rule is consistent with the national standards and other provisions of the Magnuson Act and other applicable law.

The Council prepared a regulatory impact review (RIR) for this proposed rule. Based on the RIR, the Assistant Administrator determined that the rule is not major under E.O 12291 because it would not have an annual effect on the economy of $100 million or more; would not result in an increase in costs or prices for consumers, individual industries, Federal, state, or local government agencies, or geographic regions; and would not result in significant adverse effects on competition, employment, investment, productivity, innovation, or the ability of U.S.-based enterprises to compete with foreign-based enterprises in domestic or export markets.

The Council prepared an initial regulatory flexibility analysis (IRFA) as part of the RIR, which concludes that this proposed rule, if adopted, would have significant effects on small entities. The proposed measures would conform state and Federal regulations. The most important measure is the adoption of Florida's trap certificate, trap reduction, and trap identification programs. Although the trap certificate program adversely affects some of the estimated 2,500 state permit holders during the 10-year trap reduction period, industry should benefit in the long term. Estimated gains in the ex-vessel revenue ranged from $15.2 million to $25.3 million due to the increases in the landings of lobsters during the trap reduction period. Limiting the 193 commercial divers to the bag limit at night and requiring them to measure all lobsters in the water will have a minor negative effect. As these individuals adjust to the new regulations, increases in catches of lobsters should offset any adverse effects. Adopting Florida's regulations regarding acceptable, gear, vessel, trap and buoy identification, and use of undersized lobsters as attractants in traps is expected to reduce confusion among fishermen by eliminating conflicting Federal regulations. Finally, eliminating duplicative Federal permits should reduce costs to the fishermen. A copy of the RIR/IRFA is available and comments on it are requested (see **ADDRESSES**).

The Council prepared an environmental assessment (EA) for this proposed rule that discusses the impact on the environment as a result of this rule. A copy of the EA is available and comments on it are requested (see **ADDRESSES**).

The Council determined that this rule will be implemented in a manner that is consistent to the maximum extent practicable with the approved coastal zone management programs of Alabama, Florida, Louisiana, Mississippi, North Carolina, and South Carolina. Georgia and Texas do not participate in the coastal zone management program. This determination has been submitted for review by the responsible state agencies under section 307 of the Coastal Zone Management Act.

This proposed rule restates the collection-of-information requirement for applications for commercial vessel permits, and clarifies the requirement for reporting the sale or transfer of traps. These collection-of-information requirements, which are subject to the Paperwork Reduction Act, were previously approved under OMB Control No. 0648-0205. These requirements have a public burden estimated to average 15 minutes per response, including the time for reviewing instructions, searching existing data sources, gathering and maintaining the data needed, and completing and reviewing the collection of information. Send comments regarding this burden estimate or any other aspect of the collection of information, including suggestions for reducing the burden, to Edward E. Burgess, NMFS, 9450 Koger Boulevard, St. Petersburg, FL 33702 and to the Office of Information and Regulatory Affairs, OMB, Washington, DC 20503.

This rule does not contain policies with federalism implications sufficient to warrant preparation of a federalism assessment under E.O 12612.

List of Subjects in 50 CFR Part 640

Fisheries, Fishing, Reporting and recordkeeping requirements.

Dated: July 17, 1992.

Samuel W. McKeen,

Acting Assistant Administrator for Fisheries, National Marine Fisheries Service.

For the reasons set forth in the preamble, 50 CFR part 640 is proposed to be amended as follows:

PART 640—SPINY LOBSTER FISHERY OF THE GULF OF MEXICO AND SOUTH ATLANTIC

1. The authority citation for part 640 continues to read as follows:

Authority: 16 U.S.C. 1801 *et seq.*

2. Section 640.1 is revised to read as follows:

§ 640.1 Purpose and scope.

(a) The purpose of this part is to implement the Fishery Management Plan for the Spiny Lobster Fishery of the Gulf of Mexico and South Atlantic prepared by the South Atlantic and Gulf of Mexico Fishery Management Councils under the Magnuson Act.

(b) This part governs conservation and management of spiny lobster and slipper (Spanish) lobster in the EEZ in the Atlantic Ocean and Gulf of Mexico off the Atlantic and Gulf of Mexico states from the Virginia/North Carolina border south and through the Gulf of Mexico.

(c) An owner or operator of a vessel that has legally harvested spiny lobsters in the waters of a foreign nation and possesses spiny lobsters, or separated tails, in the EEZ incidental to such foreign harvesting is exempt from the requirements of this part, provided proof of lawful harvest in the waters of a foreign nation accompanies such lobsters or tails.

3. In § 640.2, figure 1 is redesignated as figure 1 of this part 640 and is placed at the end of this part; the definitions for "Degradable panel" and "Management area" are removed; the definitions for "Carapace length" and "Tail length" are revised; and new definitions for "Bully net," "Hoop net," and "Off Florida" are added in alphabetical order to read as follows:

§ 640.2 Definitions.

* * * * *

Bully net means a circular frame attached at right angles to the end of a pole and supporting a conical bag of webbing. The webbing is usually held up by means of a cord which is released when the net is dropped over a lobster.

Carapace length means the measurement of the carapace (head body, or front section) of a spiny lobster from the anteriormost edge (front) of the groove between the horns directly above the eyes, along the middorsal line (middle of the back), to the rear edge of the top part of the carapace, excluding any translucent membrane.

* * * * *

Hoop net means a frame, circular or otherwise, supporting a shallow bag of webbing and suspended by a line and bridles. The net is baited and lowered to the ocean bottom, to be raised rapidly at a later time to prevent the escape of lobster.

* * * * *

Off Florida means the area from the Florida coast to the outer limit of the EEZ between the Georgia/Florida boundary (30°42'45.6" N. latitude) and the Alabama/Florida boundary (87°31'06" W. longitude).

* * * * *

Tail length means the lengthwise measurement of the entire tail (segmented portion), not including any protruding muscle tissue, of a spiny lobster along the top middorsal line (middle of the back) to the rearmost extremity. The measurement is made with the tail in a flat, straight position with the tip of the tail closed.

* * * * *

4. Section 640.4 is revised to read as follows:

§ 640.4 Permits and fees.

(a) *Applicability.* (1) During the commercial and recreational fishing season specified in § 640.20(a), for a person to sell, trade, or barter, or attempt to sell, trade, or barter, a spiny lobster in or from the EEZ or for a person to be exempt from the daily bag and possession limit for spiny lobster in or from the EEZ specified in § 640.23(a), a Federal vessel permit must be issued to the harvesting vessel and be on board.

(2) During the commercial and recreational fishing season specified in § 640.20(a), for a person to possess aboard a fishing vessel a separated spiny lobster tail in or from the EEZ, a tail-separation endorsement must be included on the vessel's Federal vessel permit, which must be on board.

(3) For a vessel owned by a corporation or partnership to be eligible for a Federal vessel permit specified in paragraph (a)(1) of this section, the earned income qualification specified in paragraph (b)(2)(vi) of this section must be met by, and the statement required by that paragraph must be submitted by, an officer or shareholder of the corporation, a general partner of the partnership, or the vessel operator.

(4) A vessel permit issued upon the qualification of an operator is valid only when that person is the operator of the vessel.

(b) *Application for a permit.* (1) An application for a Federal vessel permit must be submitted and signed by the owner (in the case of a corporation, a qualifying officer or shareholder; in the case of a partnership, a qualifying general partner) or operator of the vessel. The application must be submitted to the Regional Director at least 30 days prior to the date on which the applicant desires to have the permit made effective.

(2) An applicant must provide the following information:

(i) A copy of the vessel's U.S. Coast Guard certificate of documentation or, if not documented, a copy of its state registration certificate.

(ii) The vessel's name and official number.

(iii) Name, mailing address including zip code, telephone number, social security number, and date of birth of the owner (if the owner is a corporation/partnership, in lieu of the social security number, provide the employer identification number, if one has been assigned by the Internal Revenue Service, and, in lieu of the date of birth, provide the date the corporation/partnership was formed).

(iv) If the owner does not meet the earned income qualification specified in paragraph (b)(2)(vi) of this section and the operator does meet that qualification, the name, mailing address including zip code, telephone number, social security number, and date of birth of the operator.

(v) Information concerning vessel, gear used, fishing areas, and fisheries vessel is used in, as requested by the Regional Director and included on the application form.

(vi) A sworn statement by the applicant certifying that at lest 10 percent of his or her earned income was derived from commercial fishing, that is, sale of the catch, during the calendar year preceding the application.

(vii) Documentation supporting the statement of income, if required under paragraph (b)(3) of this section.

(viii) If a tail-separation endorsement is desired, a sworn statement by the applicant certifying that his fishing activity—

(A) Is routinely conducted in the EEZ on trips of 48 hours or more; and

(B) Necessitates the separation of carapace and tail to maintain a quality product.

(ix) Any other information that may be necessary for the issuance or administration of the permit.

(3) The Regional Director may require the applicant to provide documentation supporting the sworn statement under paragraph (b)(2)(vi) of this section before a permit is issued or to substantiate why such permit should not be revoked or otherwise sanctioned under paragraph (h) of this section. Such required documentation may include copies of appropriate forms and schedules from the applicant's income tax return. Copies of income tax forms and schedules are treated as confidential.

(c) *Change in application information.* The owner or operator of a vessel with a permit must notify the Regional Director within 30 days after any change in the application information specified in paragraph (b) of this section. The permit is void if any change in the information is not reported within 30 days.

(d) *Fees.* A fee is charged for each permit application submitted under paragraph (b) of this section. The amount of the fee is calculated in accordance with the procedures of the NOAA Finance Handbook for determining the administrative costs of each special product or service. The fee may not exceed such cost and is specified with each application form. The appropriate fee must accompany each application. An application for a Federal vessel permit with tail-separation endorsement, combined, is considered one application.

(e) *Issuance.* (1) The Regional Director will issue a permit at any time to an applicant if the application is complete and the applicant meets the earned income requirement specified in paragraph (b)(2)(vi) of this section. An application is complete when all requested forms, information, and documentation have been received.

(2) Upon receipt of an incomplete application, the Regional Director will notify the applicant of the deficiency. If the applicant fails to correct the deficiency within 90 days of the date of the Regional Director's letter of notification, the application will be considered abandoned.

(f) *Duration.* A permit remains valid for the period specified on it unless the vessel is sold or the permit is revoked, suspended, or modified pursuant to subpart D of 15 CFR part 904.

(g) *Transfer.* A permit issued pursuant to this section is not transferable or assignable. A person purchasing a permitted vessel who desires to conduct activities for which a permit is required must apply for a permit in accordance with the provisions of paragraph (b) of this section. The application must be accompanied by a copy of a signed bill of sale.

(h) *Display.* A permit issued pursuant to this section must be carried on board the vessel, and such vessel must be identified as required by § 640.6. The operator of a vessel must present the permit for inspection upon the request of an authorized officer.

(i) *Sanctions and denials.* A permit issued pursuant to this section may be revoked, suspended, or modified, and a permit application may be denied, in accordance with the procedures governing enforcement-related permit sanctions and denials found at subpart D of 15 CFR part 904.

(j) *Alteration.* A permit that is altered, erased, or mutilated is invalid.

(k) *Replacement.* A replacement permit may be issued. An application for a replacement permit will not be considered a new application. A fee, the amount of which is stated with the application form, must accompany each request for a replacement permit.

5. Section 640.6 is revised to read as follows:

§ 640.6 Vessel and gear identification.

(a) *Traps and diving in the EEZ off Florida.*

(1) An owner or operator of a vessel that harvests spiny lobsters by traps in the EEZ off Florida must comply with the vessel and gear identification requirements applicable to the harvesting of spiny lobsters by traps in Florida's water, as specified in sections 370.4 and 370.142, Florida Statutes, and in Rule 46–24.006 (2), (3), and (4), Rules of the Department of Natural Resources, Florida Marine Fisheries Commission, Florida Administrative Code.

(2) An owner or operator of a vessel that is used to harvest spiny lobsters by diving in the EEZ off Florida must comply with the vessel identification requirements applicable to the harvesting of spiny lobsters by diving in Florida's waters, as specified in Rule 46-24.006(5), Rules of the Department of Natural Resources, Florida Marine Fisheries Commission, Florida Administrative Code. If the owner or operator of such vessel does not have a current Florida crawfish license or trap number, in the place of the Florida number, as specified in Rule 46–24.006(5), the Federal vessel permit number must be shown.

(b) *Other gears and areas.*

(1) The owner or operator of a vessel for which a Federal vessel permit has been issued under § 640.4 that is used to harvest spiny lobsters in the EEZ off Florida by other than spiny lobster traps or diving, or that is used to harvest spiny lobsters in the EEZ other than off Florida, must meet the following vessel and gear identification requirements:

(i) The vessel's Florida crawfish license or trap number or, if not licensed by Florida, the vessel's Federal vessel permit number must be permanently and conspicuously displayed horizontally on the uppermost structural portion of the vessel in numbers at least 10 inches (25.4 cm) high so as to be readily identifiable from the air and water;

(ii) If the vessel uses spiny lobster traps in the EEZ, other than off Florida,

(A) The vessel's color code, as assigned by Florida or, if a color code has not been assigned by Florida, as assigned by the Regional Director, must be permanently and conspicuously displayed above the number specified in paragraph (b)(1)(i) of this section so as to be readily identifiable from the air and water, such color code being in the form of a circle at least 20 inches (50.8 cm) in diameter on a background of colors contrasting to those contained in the assigned color code;

(B) A buoy or timed-release buoy of such strength and buoyancy to float must be attached to each spiny lobster trap or at each end of a string of traps;

(C) A buoy used to mark spiny lobster traps must bear the vessel's assigned color code and be of such color, hue, and brilliancy as to be easily distinguished, seen, and located;

(D) A buoy used to mark spiny lobster traps must bear the vessel's Florida crawfish license or trap number or, if not licensed by Florida, the vessel's Federal vessel permit number in numbers at least 2 inches (5.08 cm) high; and

(E) A spiny lobster trap must bear the vessel's Florida crawfish license or trap number or, if not licensed by Florida, the vessel's Federal vessel permit number permanently and legibly affixed.

(2) A spiny lobster trap in the EEZ, other than off Florida, will be presumed to be the property of the most recently documented owner. Upon the sale or transfer of a spiny lobster trap used in the EEZ, other than off Florida, within 5 days of acquiring ownership, the person acquiring ownership must notify the Florida Division of Law Enforcement of the Department of Natural Resources, for a trap that bears a Florida crawfish license or trap number, or the Regional Director, for a trap that bears a Federal vessel permit number, as to the number of traps purchased, the vendor, and the crawfish license or trap number, or Federal vessel permit number, currently displayed on the traps, and must request

issuance of a crawfish license or trap number, or Federal vessel permit, if the acquiring owner does not possess such license or trap number or permit.

(c) *Unmarked traps and buoys.* An unmarked spiny lobster trap or buoy in the EEZ is illegal gear. Such trap or buoy, and any connecting lines, will be considered unclaimed or abandoned property and may be disposed of in any manner considered appropriate by the Secretary or an authorized officer. An owner of such trap or buoy remains subject to appropriate civil penalties.

6. Section 640.7 is revised to read as follows:

§ 640.7 Prohibitions.

In addition to the general prohibitions specified in § 620.7 of this chapter, it is unlawful for any person to do any of the following:

(a) Sell, trade, or barter, or attempt to sell, trade, or barter, a spiny lobster in or from the EEZ without a Federal vessel permit, as specified in § 640.4(a)(1).

(b) Falsify information specified in § 640.4(b)(2) on an application for a permit.

(c) Fail to display a permit, as specified in § 640.4(h).

(d) Falsify or fail to display and maintain vessel and gear identification, as required by § 640.6 (a) and (b).

(e) Possess a spiny lobster trap in the EEZ at a time not authorized, as specified in § 640.20 (c)(1) and (c)(2).

(f) Possess a spiny lobster in or from the EEZ at a time not authorized, as specified in § 640.20(d).

(g) Fail to return immediately to the water a berried spiny lobster or slipper lobster; strip eggs from or otherwise molest a berried spiny lobster or slipper lobster; strip eggs from or otherwise molest a berried spiny lobster or slipper lobster; or possess a spiny lobster or slipper lobster or part thereof, from which eggs, swimmerettes, or pleopods have been removed or stripped, as specified in § 640.21(a).

(h) Possess or fail to return immediately to the water unharmed a spiny lobster smaller than the minimum size limits specified in § 640.21 (b)(1) and (b)(3), except as provided in § 640.21(c).

(i) Harvest or attempt to harvest a spiny lobster by diving without having and using the water a measuring device, or fail to release an undersized spiny lobster in the water, as specified in § 640.21(b)(2).

(j) Possess an undersized spiny lobster for use as an attractant in a trap in quantities or under conditions not authorized in § 640.21(c).

(k) Possess a separated spiny lobster tail, except as specified in § 640.21(d).

(l) Possess a spiny lobster harvested by prohibited gear or methods; or possess on board a fishing vessel any dynamite or similar explosive substance, as specified in § 640.22(a) (1) and (a) (3).

(m) Use or possess in the EEZ a spiny lobster trap that does not meet the requirements specified in § 640.22(b)(1).

(n) Pull or tend a spiny lobster trap other than during daylight hours, as specified in § 640.21(b)(2).

(o) Pull or tend another person's spiny lobster trap, except as authorized in § 640.22(b)(3).

(p) Possess spiny lobsters in or from the EEZ in an amount exceeding the daily bag and possession limit specified in § 640.23(a), except as authorized in § 640.23 (b) and (c).

(q) Possess spiny lobsters aboard a vessel that uses or has on board a net or trawl in an amount exceeding the limits, as specified in § 640.23(c).

(r) Operate a vessel that fishes for or possesses spiny lobster in or from the EEZ with spiny lobster aboard in an amount exceeding the cumulative bag and possession limit, as specified in § 640.23(f).

(s) Transfer or receive a sea spiny lobster in or from the EEZ caught under the bag and possession limits, a specified in § 640.23(g).

(t) Interfere with, obstruct, delay, or prevent by any means an investigation, search, seizure, or disposition of seized property in connection with enforcement of the Magnuson Act.

7. Subpart B is revised to read as follows:

Subpart B—Management Measures

Sec.
640.20 Seasons.
640.21 Harvest limitations.
640.22 Gear and diving restrictions.
640.23 Bag and possession limits.
640.24 Authorized activities.

Subpart B—Management Measures

§ 640.20 Seasons.

(a) *Commercial and recreational fishing season.* The commercial and recreational fishing season for spiny lobster in the EEZ begins on August 6 and ends on March 31.

(b) *Special non-trap recreational fishing season.* There is a 2-day special non-trap recreational fishing season in the EEZ on Saturday and Sunday on the first full weekend preceding August 1.

(c) *Possession of traps.* (1) In the EEZ off Florida, the rules and regulations applicable to the possession of spiny lobster traps in Florida's waters, as contained in Rule 46–24.005(3), (4), and (5), Rules of the Department of Natural Resources, Florida Marine Fisheries Commission, Florida Administrative Code, or in succeeding Florida statutes or regulations, apply in their entirety to the possession of spiny lobster traps in the EEZ off Florida.

(2) In the EEZ, other than off Florida, a spiny lobster trap may be placed in the water prior to the commercial and recreational fishing season specified in paragraph (a) of this section beginning on August 1 and must be removed from the water after such season not later than April 5.

(3) A spiny lobster trap, buoy, or rope in the EEZ during periods not authorized in paragraphs (c)(1) and (c)(2) of this section will be considered unclaimed or abandoned property and may be disposed of in any manner considered appropriate by the Secretary or an authorized officer. An owner of such trap, buoy, or rope remains subject to appropriate civil penalties.

(d) *Possession of spiny lobsters.* A spiny lobster or part thereof in or from the EEZ may be possessed only during the periods specified in paragraphs (a) and (b) of this section, unless accompanied by proof indicating lawful harvest outside the EEZ. A spiny lobster in a trap in the water during a time such trap is authorized to be in the EEZ paragraph (c)(1) or (c)(2) of this section will not be deemed to be possessed provided such spiny lobster is returned immediately to the water unharmed when a trap is removed from the water during such time.

§ 640.21 Harvest limitations.

(a) *Berried lobsters.* A berried (egg-bearing) spiny lobster or slipper lobster in or from the EEZ must be returned immediately to the water unharmed. If found in a trap in the EEZ, a berried spiny lobster or slipper lobster may not be retained in the trap. A berried spiny lobster or slipper lobster in or from the EEZ may not be stripped of its eggs or otherwise molested. The possession of a spiny lobster or slipper lobster, or part thereof, in or from the EEZ from which eggs, swimmerettes, or pleopods have been removed or stripped is prohibited.

(b) *Minimum size limits.* (1) Except as provided in paragraph (c) of this section.

(i) No person may possess a spiny lobster in or from the EEZ with a carapace length of 3.0 inches (7.62 cm) or less; and

(ii) A spiny lobster, harvested in the EEZ by means other than diving, with a carapace length of 3.0 inches (7.62 cm) or less must be returned immediately to the water unharmed.

(2) No person may harvest or attempt to harvest a spiny lobster by diving in the EEZ unless he or she possesses, while in the water, a measuring device capable of measuring the carapace length. A spiny lobster captured by a diver must be measured in the water using such measuring device and, if the spiny lobster has a carapace length of 3.0 inches (7.62 cm) or less, it must be released unharmed immediately without removal from the water.

(3) Aboard a vessel authorized under paragraph (d) of this section to possess a separated spiny lobster tail, no person may possess in or from the EEZ a separated spiny lobster tail with a tail length less than 5.5 inches (13.97 cm).

(c) *Undersized attractants.* A live spiny lobster under the minimum size limit specified in paragraph (b)(1) of this section that is harvested in the EEZ by a trap may be retained aboard the harvesting vessel for future use as an attractant in a trap provided it is held in a live well aboard the vessel. No more than 50 undersized spiny lobsters, or one per trap aboard the vessel, whichever is greater, may be retained aboard for use as attractants. The live well must provide a minimum of ¾ gallons (1.7 liters) of seawater per spiny lobster. An undersized spiny lobster so retained must be released to the water alive and unharmed immediately upon leaving the trap lines and prior to 1 hour after official sunset each day.

(d) *Tail separation.* The possession aboard a fishing vessel of a separated spiny lobster tail in or from the EEZ is authorized only when the possession is incidental to fishing exclusively in the EEZ on a trip of 48 hours or more and a Federal vessel permit specified in § 640.4(a)(1) that contains a tail-separation endorsement has been issued to and is on board the vessel.

§ 640.22 Gear and diving restrictions.

(a) *Prohibited gear and methods.* (1) A spiny lobster may not be taken in the EEZ with a spear, hook, or similar device, or gear containing such devices. In the EEZ, the possession of a speared, pierced, or punctured spiny lobster is *prima facie* evidence that prohibited gear was used to take such lobster.

(2) A spiny lobster may not be taken in a directed fishery by the use of a net or trawl. See § 640.23(c) for the bycatch limits applicable to a vessel that uses or has on board a net or trawl.

(3) Poisons and explosives may not be used to take a spiny lobster or slipper lobster in the EEZ. For the purposes of this paragraph (a)(3), chlorine, bleach, and similar substances, which are used to flush a spiny lobster out of rocks or coral, are poisons. A vessel in the spiny lobster or slipper lobster fishery may not possess on board in the EEZ any dynamite or similar explosive substance.

(b) *Traps.* (1) In the EEZ, a spiny lobster trap may be no larger in dimension than 3 feet by 2 feet by 2 feet (91.4 cm by 61.0 cm by 61.0 cm), or the volume equivalent. A trap constructed of material other than wood must have a panel constructed of wood, cotton, or other material that will degrade at the same rate as a wooden trap. Such panel must be located in the upper half of the sides or on top of the trap, so that, when removed, there will be an opening in the trap no smaller than the diameter found at the throat or entrance of the trap.

(2) A spiny lobster trap in the EEZ may be pulled or tended during daylight hours only, that is, from 1 hour before official sunrise to 1 hour after official sunset.

(3) A spiny lobster trap in the EEZ may be pulled or tended only by the owner's vessel, except that permission to pull or work traps belonging to another person may be granted,

(i) For traps in the EEZ off Florida, by the Florida Division of Law Enforcement, as specified in Rule 46-24.006(6), Rules of the Department of Natural Resources, Florida Marine Fisheries Commission, Florida Administrative Code, or in succeeding Florida statutes or regulations; or

(ii) For traps in the EEZ, other than off Florida, by the Regional Director, as may be arranged upon written request.

§ 640.23 Bag and possession limits.

(a) The daily bag and possession limit of spiny lobster in or from the EEZ is six per person and applies—

(1) During the commercial and recreational fishing season specified in § 640.20(a), except as provided in paragraphs (b) and (c) of this section; and

(2) During the special non-trap recreational fishing season specified in § 640.20(b).

(b) During the commercial and recreational fishing season specified in § 640.20(a), a person is exempt from the bag and possession limit specified in paragraph (a) of this section, provided—

(1) The harvest of spiny lobsters is by diving, or by the use of a bully net, hoop net, or spiny lobster trap; and

(2) The person is aboard a vessel that has on board a Federal vessel permit specified in § 640.4(a)(1).

(c) During the commercial and recreational fishing season specified in § 640.20(a), aboard a vessel with a vessel permit specified in § 640.4(a)(1) that harvests spiny lobster by net or trawl or has on board a net or trawl, the possession of spiny lobster in or from the EEZ may not exceed at any time 5 percent, whole weight, of the total whole weight of all fish lawfully in possession on board such vessel. If such vessel lawfully possesses a separated spiny lobster tail, the possession of spiny lobster in or from the EEZ may not exceed at any time 1.6 percent, by weight of the spiny lobster or parts thereof, of the total whole weight of all fish lawfully in possession on board such vessel. For the purposes of this paragraph (c), the term "net or trawl" does not include a hand-held net, a loading or dip net, a bully net, or a hoop net.

(d) The provisions of paragraph (b) of this section notwithstanding, a person who harvests spiny lobster in the EEZ by diving at night, that is, from 1 hour after official sunset until 1 hour before official sunrise, is limited to the bag limit specified in paragraph (a) of this section, whether or not a Federal vessel permit specified in § 640.4(a)(1) has been issued to and is on board the vessel from which the diver is operating.

(e) A person who fishes for or possesses spiny lobster in or from the EEZ under the bag and possession limits specified in paragraphs (a) or (c) of this section may not combine such bag and possession limits with any bag or possession limits applicable to state waters.

(f) The operator of a vessel that fishes for or possesses spiny lobster in or from the EEZ is responsible for the cumulative bag and possession limit specified in paragraph (a) of this section applicable to that vessel, based on the number of persons aboard.

(g) A person who fishes for or possesses spiny lobster in or from the EEZ under the bag and possession limits specified in paragraphs (a) or (c) of this section may not transfer a spiny lobster at sea from a fishing vessel to any other vessel, and no person may receive at sea such spiny lobster.

§ 640.24 Authorized activities

The Secretary may authorize, for the acquisition of information and data, activities otherwise prohibited by these regulations.

[FR Doc. 92-17401 Filed 7-23-92; 8:45 am]
BILLING CODE 3510-22-M

Notices

Federal Register
Vol. 57, No. 143
Friday, July 24, 1992

This section of the FEDERAL REGISTER contains documents other than rules or proposed rules that are applicable to the public. Notices of hearings and investigations, committee meetings, agency decisions and rulings, delegations of authority, filing of petitions and applications and agency statements of organization and functions are examples of documents appearing in this section.

DEPARTMENT OF AGRICULTURE

Forms Under Review by Office of Management and Budget

July 17, 1992.

The Department of Agriculture has submitted to OMB for review the following proposal for the collection of information under the provisions of the Paperwork Reduction Act (44 U.S.C. Chapter 35) since the last list was published. This list is grouped into new proposals, revisions, extension, or reinstatements. Each entry contains the following information:

(1) Agency proposing the information collection;

(2) Title of the information collection;

(3) Form number(s), if applicable;

(4) How often the information is requested;

(5) Who will be required or asked to report;

(6) An estimate of the number of responses;

(7) An estimate of the total number of hours needed to provide the information;

(8) Name and telephone number of the agency contact person.

Questions about the items in the listing should be directed to the agency person named at the end of each entry. Copies of the proposed forms and supporting documents may be obtained from: Department Clearance Officer, USDA, OIRM, room 404-W Admin. Bldg., Washington, DC 20250, (202) 690-2118.

Revision

- *Agricultural Stabilization and Conservation Service*

7 CFR 1446—Peanut Warehouse Contracts, Applications for Approval, Examination Reports, Bond, Warehouse Receipts, and Drafts. CCC-1005, 1006, 1023, 1025, 1027, 1028, 1028-A, 1029, 1032, 1032-1, 1033, 1036, 1041-SE, 1041-VC, 1041-SW, 1057, ASCS-1013.

On occasion; Monthly; Annually.

Farms; Small businesses or organizations; 259,998 responses; 54,124 hours.

David Kincannon (202) 720-0152.

- *Agricultural Stabilization and Conservation Service*

7 CFR 723—Tobacco Marketing Quota Regulations

MQ-25, 32, 38, 38 Burley, 53, 71, 72-2, 76, 77(All), 76-1, 78, 79(All), 79 Supplemental, 79-2A, 80(All), 82, 92, 99, 108, 108-1, 117, ASCS-364, ASCS-375(All), ASCS-378, ASCS-807.

Recordkeeping; On occasion; Weekly; Annually.

Individuals or households; Farms; Small businesses or organizations; 1,403,227 responses; 227,904 hours.

Mike Thompson (202) 720-7227.

- *Food and Nutrition Service*

7 CFR Part 210—National School Lunch Program.

Monthly; Semi-annually; Biennially.

State or local governments; Federal agencies or employees; Non-profit institutions; 2,177,307 responses; 22,241,205 hours.

Winnie McQueen (703) 305-2607.

Extension

- *Food and Nutrition Service*

Food Stamp Redemption Certificate. FNS-278B and FNS-278-4.

Businesses or other for-profit; 28,800,000 responses; 576,000 hours.

Jordan Benderly (703) 305-2419.

- *Food and Nutrition Service*

7 CFR Part 220—School Breakfast Program.

Recordkeeping; Monthly; Quarterly; Semi-annually; Annually.

State or local governments; Businesses or other for-profit; Non-profit institutions; Small businesses or organizations; 826,523 responses; 5,512,166 hours.

Winnie McQueen (703) 305-2607.

Donald E. Hulcher,

Deputy Departmental Clearance Officer.

[FR Doc. 92-17482 Filed 7-23-92; 8:45 am]

BILLING CODE 3410-01-M

Animal and Plant Health Inspection Service

[Docket No. 92-115-1]

Availability of an Environmental Assessment and Finding of No Significant Impact Relative to Issuance of a Permit to Field Test Genetically Engineered Organisms

AGENCY: Animal and Plant Health Inspection Service, USDA.

ACTION: Notice.

SUMMARY: We are advising the public that an environmental assessment and finding of no significant impact have been prepared by the Animal and Plant Health Inspection Service relative to the issuance of a permit to allow the field testing of genetically engineered organisms. The environmental assessment provides a basis for our conclusion that the field testing of these genetically engineered organisms will not present a risk of introducing or disseminating a plant pest and will not have a significant impact on the quality of the human environment. Based on its finding of no significant impact, the Animal and Plant Health Inspection Service has determined that an environmental impact statement need not be prepared.

ADDRESSES: A copy of the environmental assessment and finding of no significant impact are available for public inspection at USDA, room 1141, South Building, 14th Street and Independence Avenue SW., Washington, DC, between 8 a.m. and 4:30 p.m., Monday through Friday, except holidays.

FOR FURTHER INFORMATION CONTACT: Dr. Arnold Foudin, Deputy Director, Biotechnology Permits, Biotechnology, Biologics, and Environmental Protection, APHIS, USDA, room 850, Federal Building, 6505 Belcrest Road, Hyattsville, MD 20782, (301) 436-7612. For copies of the environmental assessment and finding of no significant impact, write to Clayton Givens at the same address. Please refer to the permit number listed below when ordering documents.

SUPPLEMENTARY INFORMATION: The regulations in 7 CFR part 340 (referred to

below as the regulations) regulate the introduction (importation, interstate movement, and release into the environment) of genetically engineered organisms and products that are plant pests or that there is reason to believe are plant pests (regulated articles). A permit must be obtained before a regulated article may be introduced into the United States. The regulations set forth the procedures for obtaining a limited permit for the importation or interstate movement of a regulated article and for obtaining a permit for the release into the environment of a regulated article. The Animal and Plant Health Inspection Service (APHIS) has stated that it would prepare an environmental assessment and, when necessary, an environmental impact statement before issuing a permit for the release into the environment of a regulated article (see 52 FR 22906).

In the course of reviewing the permit application, APHIS assessed the impact on the environment that releasing the organisms under the conditions described in the permit application would have. APHIS has issued a permit for the field testing of the organisms listed below after concluding that the organisms will not present a risk of plant pest introduction or dissemination and will not have a significant impact on the quality of the human environment. The environmental assessment and finding of no significant impact, which are based on data submitted by the applicant and on a review of other relevant literature, provide the public with documentation of APHIS' review and analysis of the environmental impacts associated with conducting the field tests.

An environmental assessment and finding of no significant impact have been prepared by APHIS relative to the issuance of a permit to allow the field testing of the following genetically engineered organisms:

Permit No.	Permittee	Date issued	Organisms	Field test location
92-073-01	American Cyanamid Company	06-30-92	Tobacco plants genetically engineered to express an acetohydroxyl acid synthase gene from *Arabi-dopsis thaliana* for tolerance to the herbicides sulfony-lurea and imidazxolinone.	Cumberland County, New Jersey.

The environmental assessment and finding of no significant impact have been prepared in accordance with: (1) The National Environmental Policy Act of 1969 (NEPA) (42 U.S.C. 4321 *et seq.*), (2) Regulations of the Council on Environmental Quality for Implementing the Procedural Provisions of NEPA (40 CFR parts 1500-1508), (3) USDA Regulations Implementing NEPA (7 CFR part 1b), and (4) APHIS Guidelines Implementing NEPA (44 FR 50381-50384, August 28, 1979, and 44 FR 51272-51274, August 31, 1979).

Done in Washington, DC, this 21st day of July 1992.

Robert Melland,

Administrator, Animal and Plant Health Inspection Service.

[FR Doc. 92-17537 Filed 7-23-92; 8:45 am]

BILLING CODE 3410-34-M

[Docket No. 92-116-1]

Receipt of Permit Application for Release Into the Environment of Genetically Engineered Organisms

AGENCY: Animal and Plant Health Inspection Service, USDA.

ACTION: Notice.

SUMMARY: We are advising the public that an application for a permit to release genetically engineered organisms into the environment is being reviewed by the Animal and Plant Health Inspection Service. The application has been submitted in accordance with 7 CFR part 340, which regulates the introduction of certain genetically engineered organisms and products.

ADDRESSES: A copy of the application referenced in this notice, with any confidential business information deleted, is available for public inspection in room 1141, South Building, U.S. Department of Agriculture, 14th Street and Independence Avenue SW., Washington, DC, between 8 a.m. and 4:30 p.m., Monday through Friday, Except holidays. You may obtain copies of the document by writing to the person listed under "**FOR FURTHER INFORMATION CONTACT**".

FOR FURTHER INFORMATION CONTACT:

Dr. Arnold Foudin, Deputy Director, Biotechnology Permits, Biotechnology, Biologics, and Environmental Protection, APHIS, USDA, room 850, Federal Building, 6505 Belcrest Road, Hyattsville, MD 20782, (301) 436-7612.

SUPPLEMENTARY INFORMATION: The regulations in 7 CFR part 340, "Introduction of Organisms and Products Altered or Produced Through Genetic Engineering Which Are Plant Pests or Which There Is Reason to Believe Are Plant Pests," require a person to obtain a permit before introducing (importing, moving interstate, or releasing into the environment) into the United States certain genetically engineered organisms and products that are considered "regulated articles." The regulations set forth procedures for obtaining a permit for the release into the environment of a regulated article, and for obtaining a limited permit for the importation or interstate movement of a regulated article.

Pursuant to these regulations, the Animal and Plant Health Inspection Service has received and is reviewing the following application for a permit to release genetically engineered organisms into the environment:

Application No.	Applicant	Date received	Organisms	Field test location
92-183-01	Samuel Roberts Noble Foundation	07-01-92	Alfalfa plants genetically engineered to express the B chain (CTB) of the enterotoxin from *Vibrio cholerae*.	Carter County, Oklahoma.

Done in Washington, DC, this 21st day of July 1992.

Robert Melland,

Administrator, Animal and Plant Health Inspection Service.

[FR Doc. 92-17536 Filed 7-23-92; 8:45 am]

BILLING CODE 3410-34-M

Foreign Agricultural Service

Import Limitation; Country of Origin Quota Adjustment

AGENCY: Foreign Agricultural Service, USDA.

ACTION: Notice of country of origin adjustment for certain condensed milk from Denmark.

SUMMARY: This notice adjusts the country of origin for the quota quantity of condensed milk in airtight containers assigned to Denmark.

EFFECTIVE DATE: July 27, 1992.

FOR FURTHER INFORMATION CONTACT: Richard P. Warsack, Dairy Import Quota Manager, Import Policies and Trade Analysis Division, Foreign Agricultural Service, Room 5531 South Building, Department of Agriculture, Washington, DC 20250-1000 or telephone at (202)720-2916.

SUPPLEMENTARY INFORMATION: This notice has been reviewed under Executive Order 12291 an Departmental Regulation 1512-1 and has been determined to be "nonmajor" since it will not have any of the significant effects specified in those documents. Furthermore, to the extent, if any, that the provisions of the Regulatory Flexibility Act (5 U.S.C. 601) apply to this notice, the Administrator, Foreign Agricultural Service, hereby certifies that this notice will not have significant economic impact on a substantial number of small entities. The adjustment of the country of origin from which the quota article specified herein may be entered does not restrict the ability of importers to import this quota article, but only permits the unused quota quantity of the article allocated to Denmark to be imported from other countries. Also, since this action is being taken in recognition of changes in the market which have already occurred, this action will not cause any new economic impact.

Notice

Subchapter IV of chapter 99 of the Harmonized Tariff Schedule of the United States (HTS) sets forth import limitations imposed on certain dairy products, including certain condensed milk. Note 3(a)(iii) of subchapter IV of chapter 99 of the HTS permits the reallocation of the quota quantity of a dairy article listed in chapter 99 among the countries of origin specified for a given article if it is determined that the quota quantity assigned to a particular country is not likely to be entered from that country within a given calendar year. I hereby determine that it is not likely that the quantity of condensed milk in airtight containers specified in HTS subheading 9904.10.06 for Denmark will be entered from that country during calendar year 1992.

Notice is hereby given that the 1992 unused quota quantity for condensed milk in airtight containers specified in HTS subheading 9904.10.06 for Denmark may be imported from Australia, Canada, Denmark and the Netherlands for the remainder of the 1992 quota year.

This quota quantity for HTS subheading 9904.10.06 will revert to the original supplying country on January 1, 1993.

Issued at Washington, DC this 8th day of July 1992.

Stephen L. Censky,

Acting Administrator.

[FR Doc. 92-17542d 7-23-92; 8:45 am]

BILLING CODE 3410-10-M

Assessment of Fees for Dairy Import Licenses

AGENCY: Foreign Agricultural Service, USDA.

ACTION: Notice of the fee for dairy import licenses for the 1993 quota year.

SUMMARY: This notice announces that the fee to be charged for the 1993 quota year for each license issued to a person or firm by the Department of Agriculture authorizing the importation of certain dairy articles which are subject to quotas proclaimed under the authority of section 22 of the Agricultural Adjustment Act of 1933, as amended, will be $88.00 per license.

EFFECTIVE DATE: January 1, 1993.

FOR FURTHER INFORMATION CONTACT: Richard P. Warsack, Dairy Import Quota Manager, Import Policy and Trade Analysis Division, room 5531-South Building, U.S. Department of Agriculture, Washington, DC 20250-1000 or telephone at (202) 720-2916.

SUPPLEMENTARY INFORMATION: Regulations promulgated by the Department of Agriculture and codified at 7 CFR 6.20-6.34 provide for the issuance of licenses to importers of certain dairy articles which are subject to quotas proclaimed by the President pursuant to section 22 of the Agricultural Adjustment Act of 1933, as amended (7 U.S.C. 624). Those dairy articles may only be entered into the United States by or for the account of a person or firm to whom such licenses have been issued and only in accordance with the terms and conditions of such licenses and the regulations.

The licenses are issued on a calendar year basis, and each license authorizes the license holder to import a specified quantity and type of dairy article from a specified country. The use of licenses by the license holder to import dairy articles is monitored by the Dairy Import Quota Manager, Import Licensing Group, Import Policy and Trade Analysis Division, Foreign Agricultural Service, U.S. Department of Agriculture (the "Licensing Authority") and the U.S. Customs Service.

Regulations at 7 CFR 6.33(a) provide that a fee will be charged for each license issued to a person or firm by the Licensing Authority in order to reimburse the Department of Agriculture for the costs of administering the licensing system under this regulation. The fee is to be based upon the total cost to the Department of Agriculture of administering the licensing system during the calendar year preceding the year for which the fee is to be charged, divided by the average number of licenses issued per year for the three years preceding the year for which the fee is to be assessed.

Regulations at 7 CFR 6.33(b) provide that the Licensing Authority will announce the annual fee for each license and that such fee will be set out in a notice to be filed with the **Federal Register**. Accordingly, this notice sets out the fee for the licenses to be issued for the 1993 calendar year.

Notice

The total cost to the Department of Agriculture of administering the licensing system during 1992 has been determined to be $310,286. Of this amount, $176,036 represents the costs of the staff and supervisory hours devoted directly to administering the licensing system during 1992 (total personnel costs for the Import Licensing Group of the Foreign Agricultural Service equaled $143,811; a proportionate share of the supervisory costs devoted directly administering the licensing system equaled $32,225); $70,000 represents the total computer costs to monitor and issue import licenses during 1992; and $64,250 represents other miscellaneous costs, including travel, postage, publications, forms, and a ADP system contractor.

The average number of licenses issued per year for the three years

immediately preceding 1993 has been determined to be 3,548. Accordingly, notice is hereby given that the fee for each license issued a person or firm for the 1993 calendar year, in accordance with the regulations codified at 7 CFR 6.20–6.34, will be $88.00 per license.

Issued at Washington, DC, the 8th day of July, 1992.

Richard P. Warsack,

Licensing Authority.

[FR Doc. 92–17544 Filed 7–23–92; 8:45 am]

BILLING CODE 3410–10–M

Forest Service

Hobo/Cornwall Project Area Timber Sales; Idaho Panhandle National Forests, Shoshone County, ID

AGENCY: Forest Service, USDA.

ACTION: Notice of intent to prepare an environmental impact statement.

SUMMARY: Notice is hereby given that the Forest Service is gathering information in order to prepare an Environmental Impact Statement (EIS) for a proposal to harvest timber and build roads in the Marble Creek drainage. Portions of the proposed project lie within the Grandmother Mountain Roadless Area (No. 01148). The project area is located approximately ten miles northeast of Clarkia, Idaho.

The proposed action is to harvest approximately ten million board feet of timber in the Hobo/Cornwall Timber Sales. This action would require an estimated ten miles of new road construction and five miles of road reconstruction.

DATES: Written comments concerning the scope of the analysis must be received on or before September 8, 1992. A Public meeting will be held in St. Maries, Idaho, to review existing information and facilitate public scoping.

ADDRESSES: Send written comments to District Ranger, St. Maries Ranger District, P.O. Box 407, St. Maries, ID 83861.

FOR FURTHER INFORMATION CONTACT: Questions about the proposed action and EIS should be directed to Tracy J. Gravelle, St. Maries Ranger District, Phone 208–245–2531.

SUPPLEMENTARY INFORMATION: These management activities administered by the St. Maries Ranger District of the Idaho Panhandle National Forests in Shoshone County, Idaho would be in Township 42/43N, Range 3E, Boise Meridian. Implementation of the proposed activities would begin in Fiscal Year 95.

A number of issues have been identified to date. The major issues focus on health and growth of forest stands, management of the roadless area, effects on fisheries and water quantity and quality, and effects on the visible area along the Marble Creek Road (Forest Road 321) and various hiking trails. Detailed alternatives will be developed and analyzed including a no action alternative. Other possible alternatives to be analyzed include a leave it green alternative, a minimum new road alternative and various levels of development alternatives.

This EIS will tier to the Final EIS for the Forest Plan (Forest Plan, Idaho Panhandle National Forests, August 1987). The Forest Plan provides overall guidance for the Idaho Panhandle National Forests in terms of goals, objectives, direction in achieving desired future conditions and management area prescriptions for management practices that will be utilized during the implementation of the Forest Plan. The purpose and needs for the proposed action are to (1) improve net yield and desired species for this project areas; (2) provide amount of timber that this area can supply for area's lumber mills; and (3) foster forest regulation for this area. The process used in preparing the draft EIS will include:

1. Continue scoping for potential issues.

2. Eliminate insignificant issues or those which have been covered by a relevant previous environmental analysis.

3. Identify any additional issues to be analyzed in depth as brought out in EAs prepared for nearby project areas.

4. Identify alternatives to the proposed action. The range of alternatives will include the No Action alternative.

5. Identify potential environmental effects of the alternatives.

Management direction for the Hobo/Cornwall project area has been established by the Forest Plan for Idaho Panhandle National Forests. The area of consideration for this proposal includes Management Areas (MAs) 1, 4, 6, 9, 13, 16, and 17. A brief description of the management areas follows.

MA1: Manage those lands suitable for timber production for the long-term growth and production of commercially valuable wood products.

MA4: Manage big game winter range to provide sufficient forage to support projected big game populations through scheduled timber harvest and permanent forage areas.

MA6: Manage those lands suitable for timber production within important elk summer range habitat.

MA9: Manage non-forested lands, lands not capable of producing industrial products, and lands physically unsuited for a timber production to maintain and protect existing improvements and resource productive potential.

MA13: Manage the Hobo Botanical Area to maintain and protect its special biological attributes and the Hobo Creek Splash Dam area for its historical features.

MA16: Manage riparian area to feature riparian-dependent resources (fish, water quality, maintenance of natural channels, and certain vegetation and wildlife communities) while producing other resource outputs. The primary riparian area within the Hobo/Cornwall Resource area is located in the Upper Marble Creek watershed.

MA17: Manage lands for developing recreation opportunities in a roaded natural and rural recreation setting providing protection and enhancement to a natural appearing environment.

The Forest Service is continuing to seek information and comments from all parties who may be interested in or affected by the proposed action. A mailing will be sent to all persons, organizations and public agencies listed on the District's mailing list to seek further comments. A Public meeting will also be held in St. Maries, Idaho, to review existing information and facilitate public scoping. For most effective use, comments should be sent to the agency with 45 days from the date of this publication in the **Federal Register.** Any interested person may visit with Forest Service officials at any time during the analysis and prior to the decision. Two periods of time, however, are identified for the receipt of comments on the analysis. These two public comment periods are during the scoping process and in the review of the draft EIS.

The draft environmental impact statement should be available for public review in August 1993. The comment period on the draft EIS will be 45 days from the date the U.S. Environmental Protection Agency publishes the notice of availability in the **Federal Register.** After this public comment period, the comments received will be analyzed and considered by the Forest Service in preparing the final environmental impact statement. The final EIS is scheduled to be completed in January 1994. The District Ranger, who is the

responsible official for this EIS, will make a decision regarding this proposal after considering the comments and responses, environmental consequences discussed in the final EIS, and applicable laws, regulations, and policies. This decision and reasons for the decision will be documented in a Record of Decision.

The Forest Service believes it is important to give reviewers notice at this early stage because of several court rulings related to public participation in the environmental review process. First, reviewers of draft environmental impact statements must structure their participation in the environmental review of the proposal so that it is meaningful and alerts an agency to the reviewer's position and contentions. *Vermont Yankee Nuclear Power Corp.* v. *NRDC*, 435 U.S. 519, 553, (1978). Also, environmental objections that could be raised at the draft EIS stage, but that are not raised until after completion of the final EIS, may be waived or dismissed by the courts. *Wisconsin Heritages, Inc.* v. *Harris*, 490 F. Supp. 1334, 1338 (E.D. Wis. 1980). Because of these court rulings, it is very important that those interested in this proposed action participate by the close of the 45-day comment period so that substantive comments and objections are made available to the Forest Service at a time when it can meaningfully consider them and respond to them in the final EIS.

To assist the Forest Service in identifying and considering issues and concerns on the proposed action, comments on the draft EIS should be as specific as possible. It is also helpful if comments refer to specific pages or chapters of the draft EIS or the merits of the alternatives formulated and discussed in the statement. (Reviewers may wish to refer to the Council on Environmental Quality Regulations for implementing the procedural provisions of the National Environmental Policy Act at 40 CFR 1503.3 in addressing these points.)

Dated: July 13, 1992.

Gary W. Sieren,

District Ranger, St. Maries Ranger District, Idaho Panhandle National Forests.

[FR Doc. 92-17450 Filed 7-23-92; 8:45 am]

BILLING CODE 3410-11-M

Mount St. Helens National Volcanic Monument; Scientific Advisory Board Meeting

The Mount St. Helens Scientific Advisory Board will meet at 9 a.m., on September 9, 1992, in the Forest Supervisor's Office of the Gifford Pinchot National Forest at 6926 East Fourth Plain Blvd., Vancouver, Washington 98668 to receive information on and discuss the following:

1. Mt. Margaret Backcountry Plan.
2. Castle Lake update.
3. Open discussion on relevant topics.

The meeting will be open to the public. Persons who wish to make a statement to the Board should notify Dr. Jack K. Winjum, Chairperson, c/o Gifford Pinchot National Forest, 6926 East Fourth Plain Blvd., Vancouver, Washington 98668, 206-750-5000. Written statements may be filed with the Board before or after the meeting.

Dated: July 17, 1992.

Michael S. Edrington,

Acting Regional Forester.

[FR Doc. 92-17449 Filed 7-23-92; 8:45 am]

BILLING CODE 3410-11-M

Newberry National Volcanic Monument Advisory Council; Meeting

AGENCY: Forest Service, USDA.

ACTION: Newberry National Volcanic Monument Advisory Council Meeting.

SUMMARY: The Newberry National Volcanic Monument Advisory Council will meet on August 18 at 1 p.m. at the Fort Rock Ranger District Office in Bend, Oregon, An agenda for the two day meeting will consist of establishment of Council operating procedures, orientation to the attributes and natural resources of the Monument, discussion of a desired future condition for the Monument, and identification of issues related to the development of a Comprehensive Management Plan for the Monument.

Interested members of the public are encouraged to attend.

FOR FURTHER INFORMATION CONTACT: Direct questions about this meeting to Greg McClarren, Staff Officer, Deschutes National Forest, 1645 Highway 20 East, Bend, OR 99701, (503) 383-5561.

Dated: July 20, 1992.

Jose Cruz,

Forest Supervisor.

[FR Doc. 92-17492 Filed 7-23-92; 8:45 am]

BILLING CODE 3410-11-M

Rural Electrification Administration

Electric Program Regulations

AGENCY: Rural Electrification Administration, USDA.

ACTION: Notice: Rescission of certain obsolete REA electric program bulletins.

SUMMARY: As part of an ongoing project to simplify, clarify, and update Agency regulations and in response to the President's regulatory review initiative, the Rural Electrification Administration (REA) announces the rescission of three REA bulletins. Recent publication of a new REA regulation has made these bulletins obsolete.

EFFECTIVE DATE: These bulletins are rescinded effective April 14, 1992.

FOR FURTHER INFORMATION CONTACT: Sue Arnold, Management Analyst, Program Support Staff, Rural Electrification Administration, room 2230-S, 14th Street and Independence Avenue, SW., Washington, DC 20250-1500. Telephone: 202-720-0736.

SUPPLEMENTARY INFORMATION: In the State of the Union Address on January 28, 1992, President Bush announced a 90-day moratorium on new regulations and a concurrent review of existing regulations. In a January 28, 1992, memorandum to certain Department and Agency heads, the President directed that agencies set aside a 90-day period "to evaluate existing regulations and programs and to identify and accelerate action on initiatives that will eliminate any unnecessary regulatory burden or otherwise promote economic growth."

In 1990 REA began its own independent project to simplify, clarify and update Agency regulations. One component of this project was the publication of 7 CFR part 1710, General and Pre-loan Policies and Procedures Common to Insured and Guaranteed Electric Loans. This regulation, published January 9, 1992, at 57 FR 1044, lists a number of REA bulletins that the Agency plans to rescind as part of its regulations project.

Consistent with the spirit of both regulatory review projects, REA announces the rescission of the bulletins listed below. The publication of 7 CFR part 1710 has rendered these bulletins obsolete. REA is continuing to review its publications in order to eliminate any that are no longer necessary.

List of REA Bulletins Rescinded

Number	Title	Issue Date
20-2	Electric Loan Policies and Application Procedures	6/77
20-6	Loans for Generation and Transmission	6/69
20-14	Supplemental Financing for Loans Considered Under Section 4 of the Rural Electrification Act	2/70

Authority: 7 U.S.C. 901 *et seq.*

Dated: July 17, 1992.

James B. Huff, Sr.,

Administrator.

[FR Doc 92-17481 Filed 7-23-92; 8:45 am]

BILLING CODE 3410-15-F

DEPARTMENT OF COMMERCE

Agency Form Under Review by the Office of Management and Budget (OMB)

DOC has submitted to OMB for clearance the following proposal for collection of information under the provision of the Paperwork Reduction Act (44 U.S.C. chapter 35).

Agency: International Trade Administration

Title: North Atlantic Treaty Organization (NATO) International Competitive Bidders (ICB) List Application

Form Numbers: Agency—ITA-4023P OMB—0625-0055

Type of Request: Extension of the expiration date of a currently approved collection

Burden: 60 respondents; 60 reporting hours

Average Hours Per Response: 1 hour

Needs And Uses: NATO ICB opportunities for infrastructure project contracts are open only to companies within NATO countries which have had their eligibility to bid certified by their respective governments. The U.S. Department of Commerce (USDOC) is the executive agency which certifies U.S. companies' eligibility. Companies are required to submit an application to the USDOC/International Trade Administration (ITA). ITA reviews the application for completeness and accuracy and determines a company's eligibility based on its financial viability, technical capability and security clearances of the U.S. Department of Defense (USDOD)

Affected Public: Businesses or other for-profit; small businesses or organizations

Frequency: On occasion

Respondent's Obligation: Required to obtain or retain a benefit

OMB Desk Officer: Gary Waxman, (202) 395-7340

Copies of the above information collection proposal can be obtained by calling or writing DOC Clearance Officer, Edward Michals, (202) 377-3271, U.S. Department of Commerce, room 5327, 14th and Constitution Ave., NW., Washington, DC 20230.

Written comments and recommendations for the proposed information collection should be send to Gary Waxman, OMB Desk Officer, Room 3208 New Executive Office Building, Washington, DC 20503.

Dated: July 20, 1992.

Edward Michals,

Departmental Clearance Officer, Office of Management and Organization.

[FR Doc. 92-17432 Filed 7-23-92; 8:45 am]

BILLING CODE 3510-CW-M

Agency Information Collections Under Review by the Office of Management and Budget

DOC has submitted to the Office of Management and Budget (OMB) the following proposals for collection of information under the provisions of the Paperwork Reduction Act (44 U.S.C chapter 35).

Agency: National Oceanic and Atmospheric Administration.

Title: Foreign Fishing Vessel Application/Permitting Process.

Form Number: Agency—NOAA 88-120; OMB—0648—0089.

Type of Request: Extension of the expiration date of a currently approved collection.

Burden: 4 respondents; 14 reporting hours; average hours per respondent—3.5 hours.

Needs and Uses: Section 204 of the Magnuson Fishery Conservation Act (MFCMA) provides that each foreign nation with which the United States has entered into a Governing International Fishing Agreement may submit annual applications to fish in the U.S. Exclusive Economic Zone. This information enables the permitting provisions of section 204 of the MFCMA to be accomplished.

Affected Public: Businesses or other for-profit institutions.

Frequency: Annual.

Respondent's Obligation: Required to obtain or retain a benefit.

OMB Desk Officer: Ron Minsk, (202) 395-3084.

Agency: National Oceanic and Atmospheric Administration.

Title: Small-Craft Facility Questionnaire.

OMB Number: Agency—NOAA 77-1; OMB—0648-0021.

Type of Request: Extension of the expiration date of a currently approved collection.

Burden: 1,800 respondents; 240 reporting hours; average hours per response .133.

Needs and Uses: Information requested is used to revise/update nautical charting products as to the availability of services provided by individual smallcraft facility operations. This information serves the commercial boaters, boating public, and promotes the business operations of the smallcraft facility respondent.

Affected Public: Businesses or other for-profit institutions; small businesses or organizations.

Frequency: On occasion.

Respondent's Obligation: Voluntary.

OMB Desk Officer: Ron Minsk, (202) 395-3084.

Agency: National Oceanic and Atmospheric Administration.

Title: U.S. Fishermen Fishing in Russian Waters.

Form Number: Agency—None; OMB—0648-0228.

Type of Request: Revision of a currently approved collection.

Burden: 80 respondents; 560 reporting hours; average hours per respondent—7 hours

Needs and Uses: U.S. fishermen who wish to fish in the Russian economic zone must apply for a Russian permit. The application must be submitted to NMFS for transmittal to Russian authorities. The Russian authorities will consider the information when making a decision on issuing a permit. U.S. vessels departing and re-entering the U.S. EEZ from the Russian zone must report fish production aboard.

Affected Public: Businesses or other for-profit institutions; small businesses or organizations.

Frequency: On occasion.

Respondent's Obligation: Required to obtain or retain a benefit.

OMB Desk Officer: Ron Minsk, (202) 395-3084.

Copies of the above information collection proposals can be obtained by calling or writing DOC Clearance Officer, Edward Michals, (202) 377-3271, Department of Commerce, room 5327, 14th and Constitution Avenue, NW., Washington, DC 20230.

Written comments and recommendations for the proposed information collections should be sent to Ron Minsk, OMB Desk Officer, Room 3019, New Executive Office Building, Washington, DC 20503.

Dated: July 20, 1992.

Edward Michals,

Departmental Clearance Officer, Office Of Management and Organization.

[FR Doc. 92-17431 Filed 7-23-92: 8:45 am]

BILLING CODE 3510-CW-M

International Trade Administration

[A-427-801, A-428-801, A-475-801, A-588-804, A-559-801, A-401-801, A-549-801, A-412-801]

Antifriction Bearings (Other Than Tapered Roller Bearings) and Parts Thereof From France, Germany, Italy, Japan, Romania, Singapore, Sweden, Thailand, and the United Kingdom; Amendment to Final Results of Antidumping Duty Administrative Reviews

AGENCY: International Trade Administration/Import Administration, Department of Commerce.

ACTION: Notice of amendment to final results of antidumping duty administrative reviews.

SUMMARY: On June 24, 1992, the Department of Commerce published the final results of its 1990-91 administrative reviews of the antidumping duty orders on antifriction bearings (other than tapered roller bearings) and parts thereof, from France, Germany, Italy, Japan, Romania, Singapore, Sweden, Thailand and the United Kingdom. The classes or kinds of merchandise covered by these reviews were ball bearings and parts thereof, cylindrical roller bearings and parts thereof, and spherical plain bearings and parts thereof. The reviews covered 63 manufacturers/exporters and the period May 1, 1990 through April 30, 1991. Based on the correction of clerical errors, we have changed the margins for ball bearings for two companies, cylindrical roller bearings for ten companies, and spherical plain bearings for two companies.

EFFECTIVE DATE: July 24, 1992.

FOR FURTHER INFORMATION CONTACT: Richard Rimlinger or Bernard Carreau, Office of Antidumping Compliance, International Trade Administration, U.S. Department of Commerce, Washington, DC 20230; telephone: (202) 377-4733.

SUPPLEMENTARY INFORMATION:

Background

On June 24, 1992, the Department of Commerce (the Department) published in the **Federal Register** (57 FR 28360) the final results of its administrative reviews of the antidumping duty orders on antifriction bearings (other than tapered roller bearings) and parts thereof, from France, Germany, Italy, Japan, Romania, Singapore, Sweden, Thailand and the United Kingdom. The classes or kinds of merchandise covered by these reviews were ball bearings and parts thereof (BBs), cylindrical roller bearings and parts thereof (CRBs), and spherical plain bearings and parts thereof (SPBs). The reviews covered 63 manufacturers/exporters and the period May 1, 1990 through April 30, 1991.

After publication of our final results, we received in a timely fashion allegations of clerical errors from the petitioner, the Torrington Company, and from several respondents: Barden, FAG, FiatAvio, IJK, INA, Koyo, MBB, NSK, Pratt & Whitney, SKF, and SNR. In most instances, we agree with the allegations and have made corrections where appropriate.

However, we are not issuing clerical error corrections with respect to BBs from France, Germany, Italy, Japan, Sweden and the United Kingdom, as well as CRBs from Japan. On June 25, 1992, NTN Corporation, a Japanese exporter, filed a summons at the Court of International Trade (CIT) concerning its exports of BBs, CRBs and SPBs from Japan. On June 26, 1992, Federal-Mogul Corporation, a domestic interested party, filed a summons at the CIT on exports of BBs from France, Germany, Italy, Japan, Sweden and the United Kingdom. In accordance with *Zenith Elec. Corp.* v. *United States*, 699 F. Supp. 296 (CIT 1988), *aff'd*, 884 F.2d 556 (Fed. Cir. 1989), the Department cannot automatically correct ministerial errors made in an administrative review once the court's exclusive jurisdiction has been invoked. The Department must seek the court's authorization before it can correct clerical errors with respect to bearings affected by these court actions.

Amended Final Results of Review

As a result of our corrections of clerical errors, we have determined the following weighted-average margins to exist for the period May 1, 1990 through April 30, 1991:

Country	Company	Class or kind	Rate
France	Pratt & Whitney	CRBs	4.88
Germany	FAG	CRBs	7.04
		SPBs	1.10
	FiatAvio	CRBs	23.52
	INA	CRBs	0.45
	Pratt & Whitney	CRBs	3.34
	SKF	CRBs	9.76
		SPBs	1.74
	All others	SPBs	1.74
Italy	FiatAvio	CRBs	13.26
	All others	CRBs	13.26
Singapore	NMB/Pelmec	BBs	4.51
	All others	BBs	4.51
Sweden	SKF	CRBs	5.21
	All others	CRBs	5.21
Thailand	NMB/Pelmec	BBs	0.57
	All others	BBs	0.57
United Kingdom	Pratt & Whitney	CRBs	4.24

Based upon these rates, the Department will instruct the Customs Service to collect cash deposits of estimated antidumping duties and to assess antidumping duties on all appropriate entries in accordance with the procedures discussed in the final results of these reviews (57 FR 28361).

These deposit requirements are effective for all shipments of the subject merchandise entered, or withdrawn from warehouse, for consumption on or

after the date of publication of this notice and shall remain in effect until publication of the final results of the next administrative review.

This notice also serves as a reminder to importers of their responsibility under 19 CFR 353.26 to file a certificate regarding the reimbursement of antidumping duties prior to liquidation of the relevant entries during this review period. Failure to comply with this requirement could result in the Secretary's presumption that reimbursement of antidumping duties occurred and the subsequent assessment of double antidumping duties.

This notice is published in accordance with section 751(f) of the Tariff Act of 1930, as amended (19 U.S.C. 1675(f)) and 19 CFR 353.28(c).

Dated: July 17, 1992.

Alan M. Dunn,

Assistant Secretary for Import Administration.

[FR Doc. 92-17430 Filed 7-23-92; 8:45 am]

BILLING CODE 3510-DS-M

[C-433-804, et al.]

Initiation of Countervailing Duty Investigations and Postponement of Preliminary Determinations: Certain Steel Products From Austria, Belgium, Brazil, France, Germany, Italy, Korea, Mexico, New Zealand, Spain, Sweden, Taiwan, and the United Kingdom

In the matter of C-433-804, C-423-806, C-351-818, C-427-810, C-428-817, C-475-808, C-580-818, C-201-810, C-614-802, C-469-804, C-401-804, C-583-819, C-412-815.

AGENCY: Import Administration, International Trade Administration, Department of Commerce.

EFFECTIVE DATE: July 24, 1992.

FOR FURTHER INFORMATION CONTACT: The following officials of the Office of Countervailing Investigations, Import Administration, U.S. Department of Commerce, B-099, 14th Street and Constitution Avenue NW., Washington, DC 20230, may be contacted for additional information: Ross L. Cotjanle (202) 377-3584 for Austria, Italy, Mexico, and New Zealand; Stephanie Hager (202) 377-5055 for Brazil, Sweden, and the United Kingdom; Rick Herring (202) 377-3530 for Germany, Spain, and Taiwan; and, Vince Kane (202) 377-2815 for Belgium, France, and Korea.

The Petition

On June 30, 1992, we received petitions in proper form filed by Armco Steel Company, L.P.; Bethlehem Steel Corporation; Inland Steel Industries, Inc.; LTV Steel Company, Inc.; National Steel Corporation; and U.S. Steel Group, a Unit of USX Corporation, on behalf of the United States industries producing the following classes or kinds of merchandise: certain hot-rolled carbon steel flat products, certain cold-rolled carbon steel flat products, certain corrosion-resistant carbon steel flat products, and certain cut-to-length carbon steel plate. We were separately notified on June 30, 1992, that the following companies were also petitioners in certain of these investigations: Geneva Steel, Gulf States Steel Inc. of Alabama, Laclede Steel Company, Lukens Steel Company, Sharon Steel Corporation, and WCI Steel, Inc. See appendix I for a listing of the petitioners on a country- and class or kind-basis. In accordance with 19 CFR 355.12, petitioners allege that manufacturers, producers, or exporters of the subject merchandise in Austria, Belgium, Brazil, France, Germany, Italy, Korea, Mexico, New Zealand, Spain, Sweden, Taiwan, and the United Kingdom receive subsidies within the meaning of section 701 of the Tariff Act of 1930, as amended (the Act).

Injury Test

Because each of the countries under consideration is a "country under the Agreement" within the meaning of section 701(b) of the Act, title VII of the Act applies to these investigations. Accordingly, the U.S. International Trade Commission (ITC) must determine whether imports of the subject merchandise from Austria, Belgium, Brazil, France, Germany, Italy, Korea, Mexico, New Zealand, Spain, Sweden, Taiwan, and/or the United Kingdom materially injure, or threaten material injury to, U.S. industries.

Standing

Petitioners have stated that they are interested parties, as defined in section 771(9)(C) of the Act, and that they have filed the petitions on behalf of the U.S. industries producing the products subject to these investigations. If any interested party, as described under paragraphs (C), (D), (E), or (F) of section 771(9) of the Act, wishes to register support for, or opposition to, this petition, such party should file a written notification with the Assistant Secretary for Import Administration, in accordance with 19 CFR 355.31.

Exclusion Requests

Under the Department's regulations, any producer or reseller seeking exclusion from a potential countervailing duty order must submit its request for exclusion within 30 days of the date of the publication of this notice. The procedures and requirements regarding the filing of such requests are contained in 19 CFR 355.14.

Allegations of Subsidies

Section 702(b) of the Act requires the Department to initiate a countervailing duty proceeding whenever an interested party files a petition, on behalf of an industry, that (1) alleges the elements necessary for the imposition of a duty under section 701(a), and (2) is accompanied by information reasonably available to the petitioner supporting the allegations.

Initiation of Investigations

The Department has examined the petitioners on certain steel products from Austria, Belgium, Brazil, France, Germany, Italy, Korea, Mexico, New Zealand, Spain, Sweden, Taiwan, and the United Kingdom and found that they comply with the requirements of section 702(b) of the Act. Therefore, in accordance with section 702 of the Act, we are initiating countervailing duty investigations to determine whether manufacturers, producers, or exporters of certain hot-rolled carbon steel flat products, certain cold-rolled carbon steel flat products, certain corrosion-resistant carbon steel flat products, and certain cut-to-length carbon steel plate receive countervailable subsidies. The total number of programs which we are investigating exceeds 250. For Austria, Mexico, New Zealand, Sweden and the United Kingdom, we are investigating all programs alleged in the petitions to confer subsidies. For the remaining countries, we are not investigating certain programs, listed below by country, alleged in the petitions to be benefitting manufacturers, producers, or exporters of the subject merchandise. (The European Community program upon which we are not initiating is separately listed below. This program, alleged in various petitions, may apply to one or more of its constituent countries for which petitions were filed.) For a complete discussion of all programs and the bases for our decisions, see the "Concurrence Memorandum" for each country which are located in the public files in the Central Records Unit.

A. Belgium

1. 1959 Law
2. Research and Development Contract Assistance—Fabfer
3. 1984 Conversions of Sidmar Debt to Equity

4. Conversion of Cockerill Sambre Debt to Equity Under the Gandois Plan
5. Clabecq Preferred Stock Devaluation
6. "Other" Loans to Fabfer
7. Export Insurance

B. Brazil

1. Government of Brazil Guarantees of Foreign Currency Loans

C. European Community

1. ECSC Conversion Loans Under Article 56

D. France

1. Electricity Alleged to be Provided on Preferential Terms.
2. Other Loan Guarantees

E. Germany

1. Steel Research Program Grants from the Ministry of Research and Development
2. Articles 4, 4a, and 4b of the Investment Premium Act
3. Export Guarantees
4. Equity Infusions from Treuhandanstalt
5. Ad Hoc Loans from the Governments of Bremen and Bavaria to Klockner
6. Ad Hoc Loan Guarantees from North Rhine-Westphalia to Krupp
7. North Rhine-Westphalia's Technical Program Steel

F. Italy

1. Finsider Sales to IRI
2. Decree No. 332 of September 30, 1989
3, Export Credit Insurance Under Law No. 227
4. Ilva/Falck Accord
5. Grants for Electricity Price Increases for Electric Steelmakers Pursuant to Law 495/81
6. Debt Outstanding in 1991
a. Ilva Debt
b. Falck IMI Loan
c. Falck Mediobanca Loan

G. Korea

1. Certain Equity Infusions into POSCO in 1981 and from 1986 to 1988
2. Government Land Transfers to POSCO for the Pohang Facility

H. Spain

1. Aid for Scrap Purchases
2. Disaster Assistance Loans
3. Grants from the Basque Government for Labor, Energy and Environmental Purposes
4. Participative Credits Provided by Private Banks

I. Taiwan

1. Certain Equity Infusions into China Steel Corporation from 1981 to 1988
2. Articles 10, 22, 34, 34–1, 43, and 84 of the Statute for Encouragement of Investments (SEI)
3. Short-term Financing "Channeled to Priority Industries"
4. Long-term Loans Provided by the Strategic Fund

Postponement of Preliminary Determinations

Pursuant to section 703(c) of the Act, the Department determines that these investigations are extraordinarily complicated by reason of one or more of the following: (1) The large number and complex nature of the alleged subsidies, (2) the novelty of the issues presented by reason of the large number of simultaneous investigations involving four different classes or kinds of steel products, and (3) the large number of producers and exporters. We also determine that additional time is necessary for making our preliminary determinations. Accordingly, on the assumption that the parties concerned will cooperate in these investigations, we are postponing our preliminary determinations until not later than 150 days after the filing of the petitions, *i.e.*, November 27, 1992. If the parties concerned with a particular investigation are found not to be cooperative, we may issue our preliminary determinations not later than 85 days after the filing of the petitions.

Scope of Investigations

Listed below by country are the classes or kinds of merchandise covered by each of these investigations. For a complete description of these products, see appendix II.

A. Austria

1. Certain cold-rolled carbon steel flat products

B. Belgium

1. Certain hot-rolled carbon steel flat products
2. Certain cold-rolled carbon steel flat products
3. Certain cut-to-length carbon steel plate

C. Brazil

1. Certain hot-rolled carbon steel flat products
2. Certain cold-rolled carbon steel flat products
3. Certain corrosion-resistant carbon steel flat products
4. Certain cut-to-length carbon steel plate

D. France

1. Certain hot-rolled carbon steel flat products
2. Certain cold-rolled carbon steel flat products
3. Certain corrosion-resistant carbon steel flat products
4. Certain cut-to-length carbon steel plate

E. Germany

1. Certain hot-rolled carbon steel flat products
2. Certain cold-rolled carbon steel flat products
3. Certain corrosion-resistant carbon steel flat products
4. Certain cut-to-length carbon steel plate

F. Italy

1. Certain hot-rolled carbon steel flat products
2. Certain cold-rolled carbon steel flat products
3. Certain cut-to-length carbon steel plate

G. Korea

1. Certain hot-rolled carbon steel flat products
2. Certain cold-rolled carbon steel flat products
3. Certain corrosion-resistant carbon steel flat products
4. Certain cut-to-length carbon steel plate

H. Mexico

1. Certain corrosion-resistant carbon steel flat products
2. Certain cut-to-length carbon steel plate

I. New Zealand

1. Certain hot-rolled carbon steel flat products
2. Certain cold-rolled carbon steel flat products
3. Certain corrosion-resistant carbon steel flat products

J. Spain

1. Certain cold-rolled carbon steel flat products
2. Certain cut-to-length carbon steel plate

K. Sweden

1. Certain corrosion-resistant carbon steel flat products
2. Certain cut-to-length carbon steel plate

L. Taiwan

1. Certain cold-rolled carbon steel flat products
2. Certain corrosion-resistant carbon steel flat products

M. United Kingdom

1. Certain cold-rolled carbon steel flat products

2. Certain cut-to-length carbon steel plate

ITC Notification

Pursuant to section 702(d) of the Act, we have notified the ITC of these initiations.

Preliminary Determinations By the ITC

The ITC will determine by August 14, 1992, whether there is a reasonable indication that industries in the United States are being materially injured, or are threatened with material injury, by reason of imports from Austria, Belgium, Brazil, France, Germany, Italy, Korea, Mexico, New Zealand, Spain, Sweden, Taiwan, and the United Kingdom of certain steel products. Any ITC determination which is negative will result in the respective investigation being terminated; otherwise, the investigations will proceed according to statutory and regulatory time limits.

This notice is published pursuant to 702(c)(2) of the Act and 19 CFR 355.13(b).

Dated: July 20, 1992.

Alan M. Dunn,

Assistant Secretary for Import Administration.

APPENDIX I

Country	Product	Case No.	Petitioners
Austria	CR	C-433-804	A, B, Gu, I, L, N, S, U, W
Belgium	HR	C-423-806	A, B, Ge, Gu, I, L, N, S, U, W
Belgium	CR	C-423-806	A, B, Gu, I, L, N, S, U, W
Belgium	PLATE	C-423-806	B, Ge, Gu, I, Lu, U
Brazil	HR	C-351-818	A, B, Ge, Gu, I, L, N, S, U, W
Brazil	CR	C-351-818	A, B, Gu, I, L, N, S, U, W
Brazil	CRCS	C-351-818	A, B, Gu, I, N, S, U, W
Brazil	PLATE	C-351-818	B, Ge, Gu, I, Lu, U
France	HR	C-427-810	A, B, Ge, Gu, I, L, N, S, U, W
France	CR	C-427-810	A, B, Gu, I, L, N, S, U, W
France	CRCS	C-427-810	A, B, Gu, I, L, N, S, U, W
France	PLATE	C-427-810	B, Ge, Gu, I, Lu, U
Germany	HR	C-428-817	A, B, Ge, Gu, I, L, N, S, U, W
Germany	CR	C-428-817	A, B, Gu, I, L, N, S, U, W
Germany	CRCS	C-428-817	A, B, Gu, I, L, N, S, U, W
Germany	PLATE	C-428-817	B, Ge, Gu, I, Lu, U
Italy	HR	C-475-808	A, B, Ge, Gu, I, L, N, S, U, W
Italy	CR	C-475-808	A, B, Gu, I, L, N, S, U, W
Italy	PLATE	C-475-808	B, Ge, Gu, I, Lu, U
Korea	HR	C-580-818	A, B, Ge, Gu, I, L, N, S, W
Korea	CR	C-580-818	A, B, Gu, I, L, N, S, U, W
Korea	CRCS	C-580-818	A, B, Gu, I, L, N, S, U, W
Korea	PLATE	C-580-818	B, Ge, Gu, I, Lu, U
Mexico	CRCS	C-201-810	A, B, Gu, I, L, N, S, U, W
Mexico	PLATE	C-201-810	B, Ge, Gu, I, Lu, U
New Zealand	HR	C-614-802	A, B, Ge, Gu, I, L, N, S, U, W
New Zealand	CR	C-614-801	A, B, Gu, I, L, N, S, U, W
New Zealand	CRCS	C-614-802	A, B, Gu, I, N, S, U, W
Spain	CR	C-469-804	A, B, Gu, I, L, N, S, U, W
Spain	PLATE	C-469-804	B, Ge, Gu, I, Lu, U
Sweden	CRCS	C-401-804	A, B, Gu, I, L, N, S, U, W
Sweden	PLATE	C-401-804	B, Ge, Gu, I, Lu, U
Taiwan	CR	C-583-819	A, B, Gu, I, L, N, S, U, W
Taiwan	CRCS	C-583-819	A, B, Gu, I, L, N, S, U, W
United Kingdom	CR	C-412-815	A, B, Gu, I, L, N, S, U, W
United Kingdom	PLATE	C-412-815	B, Ge, Gu, I, Lu, U

KEY:
Products:
HR=Hot-rolled Carbon Steel.
CR=Cold-rolled Carbon Steel.
CRCS=Corrosion-Resistant Carbon Steel.
PLATE=Cut-to-Length Carbon Steel Plate.
Petitioners:
A=Armco Steel Company, L.P.
B=Bethlehem Steel Corporation.
Ge=Geneva Steel*.
Gu=Gulf States Steel Inc. of Alabama.
I=Inland Steel Industries, Inc.
L=LTV Steel Co., Inc.
La=Laclede Steel Company.**
Lu=Lukens Steel Company
N=National Steel Corporation.
S=Sharon Steel Corporation.
U=U.S. Steel Group—a Unit of USX Corporation.
W=WCI Steel, Inc.

*Note: Geneva Steel filed as a petitioner in the countervailing duty investigation involving Taiwan. However, it has not been included in the above chart for Taiwan because no information was provided in the petition to indicate that it produced the merchandise subject to investigation from Taiwan. The Department will seek clarification on this matter during the proceedings.

**Note: Laclede Steel Company filed as a petitioner in the countervailing duty investigations involving Belgium, Brazil, France, Germany, Italy, Korea, and New Zealand. However, it has not been included in the above chart because no information was provided to indicate the class(es) or kind(s) of merchandise it produces. The Department will seek clarification on this matter during the proceedings.

Scope of the Investigations

The products covered by these investigations, certain flat-rolled steel products, constitute the following four separate "classes or kinds" of merchandise, as outlined below.

Although the Harmonized Tariff Schedule of the United States (HTS) subheadings are provided for convenience and customs purposes, our written descriptions of the scope of these proceedings are dispositive.

Certain Hot-Rolled Carbon Steel Flat Products

These products include hot-rolled carbon steel flat products, of solid rectangular (other than square) cross section, of rectangular shape, neither clad, plated nor coated with metal, whether or not painted, varnished or coated with plastics or other nonmetallic substances, in coils, or in straight lengths which are less than 4.75 millimeters in thickness and of a width measuring at least 10 times the thickness, as currently classifiable in the HTS under item numbers 7208.11.0000, 7208.12.0000, 7208.13.1000, 7208.13.5000, 7208.14.1000, 7208.14.5000, 7208.21.1000, 7208.21.5000, 7208.22.1000, 7208.22.5000, 7208.23.1000, 7208.23.5030, 7208.23.5090, 7208.24.1000, 7208.24.5030, 7208.24.5090, 7208.34.1000, 7208.34.5000, 7208.35.1000, 7208.35.5000, 7208.44.0000, 7208.45.0000, 7208.90.0000, 7210.70.3000, 7210.90.9000, 7211.12.0000, 7211.19.1000, 7211.19.5000, 7211.22.0090, 7211.29.1000, 7211.29.3000, 7211.29.5000, 7211.29.7030, 7211.29.7060, 7211.29.7090, 7211.90.0000, 7212.40.1000, 7212.40.5000, and 7212.50.0000.

Certain Cold-Rolled Carbon Steel Flat Products

These products include cold-rolled (cold-reduced) carbon steel flat products, of solid rectangular (other than square) cross section, of rectangular shape, neither clad, plated nor coated with metal whether or not painted, varnished or coated with plastics or other nonmetallic substances, in coils, or in straight lengths which, if of a thickness less than 4.75 millimeters, are of a width measuring at least 10 times the thickness or if of a thickness of 4.75 millimeters or more are of a width which exceeds 150 millimeters and measures at least twice the thickness, as currently classifiable in the HTS under item numbers 7209.11.0000, 7209.12.0030, 7209.12.0090, 7209.13.0030, 7209.13.0090, 7209.14.0030, 7209.14.0090, 7209.21.0000, 7209.22.0000, 7209.23.0000, 7209.24.1000, 7209.24.5000, 7209.31.0000, 7209.32.0000, 7209.33.0000, 7209.34.0000, 7209.41.0000, 7209.42.0000, 7209.43.0000, 7209.44.0000, 7209.90.0000, 7210.70.3000, 7210.90.9000, 7211.30.1030, 7211.30.1090, 7211.30.3000, 7211.30.5000, 7211.41.1000, 7211.41.3030, 7211.41.3090, 7211.41.5000, 7211.41.7030, 7211.41.7060, 7211.41.7090, 7211.49.1030, 7211.49.1090, 7211.49.3000, 7211.49.5030, 7211.49.5060, 7211.49.5090, 7211.90.0000, 7212.40.5000, and 7212.50.0000.

Certain Corrosion-Resistant Carbon Steel Flat Products

These products include flat-rolled carbon steel products, of solid rectangular (other than square) cross section, of rectangular shape, either clad, plated or coated with corrosion-resistant metals such as zinc, aluminum or zinc-, aluminum-, nickel- or iron-based alloys, whether or not corrugated or painted, varnished or coated with plastics or other nonmetallic substances, in addition to the metallic coating, in coils, or in straight lengths which, if of a thickness less than 4.75 millimeters, are of a width measuring at least 10 times the thickness or if of a thickness of 4.75 millimeters or more are of a width which exceeds 150 millimeters and measures at least twice the thickness, as currently classifiable in the HTS under item numbers 7210.31.0000, 7210.39.0000, 7210.41.0000, 7210.49.0030, 7210.49.0090, 7210.60.0000, 7210.70.6030, 7210.70.6060, 7210.70.6090, 7210.90.1000, 7210.90.6000, 7210.90.9000, 7212.21.0000, 7212.29.0000, 7212.30.1030, 7212.30.1090, 7212.30.3000, 7212.30.5000, 7212.40.1000, 7212.40.5000, 7212.50.0000, and 7212.60.0000. Excluded from these investigations are flat-rolled steel products either plated or coated with tin, lead, chromium, chromium oxides, both tin and lead ("terne plate"), or both chromium and chromium oxides ("tin-free steel").

Certain Cut-To-Length Carbon Steel Plate

These products include hot-rolled carbon steel universal mill plates (*i.e.*, flat-rolled products rolled on four faces or in a closed box pass, of a width exceeding 150 millimeters but not exceeding 1,250 millimeters and of a thickness of not less than 4 millimeters, not in coils and without patterns in relief) of solid rectangular (other than square) cross section, of rectangular shape, neither clad, plated nor coated with metal, whether or not painted, varnished, or coated with plastics or other nonmetallic substances; and certain hot-rolled carbon steel flat products in straight lengths, of solid rectangular (other than square) cross section, of rectangular shape, hot rolled, neither clad, plated, nor coated with metal, whether or not painted, varnished, or coated with plastics or other nonmetallic substances, 4.75 millimeters or more in thickness and of a width which exceeds 150 millimeters and measures at least twice the thickness, as currently classifiable in the HTS under item numbers 7208.31.0000, 7208.32.0000, 7208.33.1000, 7208.33.5000, 7208.41.0000, 7208.42.0000, 7208.43.0000, 7208.90.0000, 7210.70.3000, 7211.11.0000, 7211.12.0000, 7211.21.0000, 7211.22.0045, 7211.90.0000, 7212.40.1000, 7212.40.5000, and 7212.50.0000.

[FR Doc. 92-17567 Filed 7-23-92; 8:45 am]

BILLING CODE 3510-10-DS-M

Scope Rulings

AGENCY: International Trade Administration/Import Administration, Department of Commerce.

ACTION: Notice of scope rulings.

SUMMARY: The International Trade Administration (ITA) hereby publishes a list of scope rulings completed between April 1, 1992, and June 30, 1993. In conjunction with this list, the ITA is also publishing a list of pending requests for scope clarifications. The ITA intends to publish future lists within thirty days of the end of each quarter.

EFFECTIVE DATE: July 24, 1992.

FOR FURTHER INFORMATION CONTACT: Melissa G. Skinner, Compliance, Import Administration, International Trade Administration, U.S. Department of Commerce, 14th Street and Constitution Avenue NW., Washington, DC 20230, telephone (202) 377-4851.

Background

Sections 353.29(d)(8) and 355.29(d)(8) of the Department's regulations (19 CFR 353.29(d)(8) and 355.29(d)(8)) provide that on a quarterly basis the Secretary will publish in the **Federal Register** a list of scope rulings completed within the last three months. The lists are to include the case name, reference number, and brief description of the ruling.

This notice lists scope rulings completed between April 1, 1992, and June 30, 1992, and pending scope clarification requests. The ITA intends to publish in October 1992 a notice of scope rulings completed between July 1, 1992, and September 31, 1992.

The following lists provide the country, case reference number, requester(s), and a brief description of either the ruling or product subject to the request.

Scope Rulings Completed Between April 1, 1992, and June 30, 1992

Country: Federal Republic of Germany.

A-428-801: Antifriction Bearings:

Allergan Medical Optics—stainless steel balls for non-bearing use (in an optical polishing process) are not antifriction bearings, or parts thereof, and are not within the scope of the order—06/19/92.

Country: Italy.

A-475-801: Antifriction Bearings:

IBC Bearing Co.—stainless steel balls that are finished, semiground balls, are not within the scope of the order—05/18/92.

Country: People's Republic of China.

A-570-502: Certain Iron Construction Castings:
Customs/CNI Manufacturing—certain light-weight iron rings, not suitable for use with manhole covers are not within the scope of the order—advice to Customs—06/15/92.

Country: Korea.

A-580-008: Color Television Receivers:
Goldstar Co., Ltd., Goldstar Electronics International, Inc., and Goldstar of America, Inc.—printed circuit boards combined after importation with U.S.-made color picture tubes are not within the scope of the order—06/29/92.

Country: Japan.

A-588-405: Celluar Mobile Telephones and Subassemblies:
NEC—the base band IC is a subassembly not dedicated exclusively for use in CMTs and, therefore, is not within the scope of the order—04/21/92.
NEC Corporation and NEC America, Inc.—hand-held portable cellular telephones model numbers MP5A1A3-1A, MP5A1A4-1A, MP5A1A1-1A, and MP5A1A2-1A are portable cellular telephones and, therefore, are not within the scope of the order—04/21/92.
Sony Corporation and Sony Corporation of America, Inc.—pocket-sized portable cellular telephones modes CM-H1 and CM-H20 are portable cellular telephones and, therefore, are not within the scope of order and the subassemblies of the CM-H1 and CM-H20 are not "dedicated exclusively for use in CMTs" and, therefore, are not within the scope of the order—04/21/92.
Mitsubishi Electric Corporation, Mitsubishi Electronics America, Inc., and Mitsubishi Consumer Electronics America, Inc.—cellular telephone models MT-996FOR6A and MT-992FOR6A are portable cellular telephones and, therefore, are not within the scope of the order—04/21/92.

A-588-809: Certain Small Business Telephone Systems and Subassemblies Thereof:
Iwatsu Electric Company Ltd. and Iwatsu America Inc.—Iwatsu circuit cards IX-ROMP32S, IX-2ICOTB, IX-ICOTP, IX-SREP, IX-CMSG-1, IX-4ETRAN, IX-RATK, IX-HCIF, IX-BUFM, IX-8BSUB/IX-BTERM, and IX-ROMP32, and the power supply unit IX-SRPWS (Star Repeater Power Supply) are "dual use" subassemblies and, therefore, are not within the scope of the order—05/29/92.

A-588-810: Mechanical Transfer Presses:
Customs—a destack sheet feeder designed to be used with a mechanical transfer press is an accessory and, therefore, is not within the scope of the order—04/16/92.

A-588-814: Polyethylene Terephthalate Film, Sheet, and Strip:
Fuji Photo Film U.S.A., Inc.—Fuji's roller transport cleaning film which has at least one of its surfaces modified by the application of 0.5 micrometers of SBR latex is not within the scope of the order—05/22/92.

A-588-817: High Information Content Flat Panel Displays:
Honeywell Incorporated—full color active matrix liquid flat panel display with a total of 50,957 pixels for incorporation into Honeywell's Traffic Alert and Collision Avoidance System is not within the scope of the order—04/14/92.
Kontron Instruments Inc. and Kontron Instruments K.K.—the KAAT II Monitor Control Module, incorporating an active-matrix liquid crystal high information content display panel with over 120,000 pixels, is an end-use product and, therefore, is not within the scope of the order—06/19/92.

Scope Inquiries Terminated Between March 1, 1992, and June 30, 1992

A-588-807: Industrial Belts and Components and Parts Thereof, Whether Cured or Uncured:
Yamaha Motor Corporation—V-belts for use on Yamaha scooters, snow mobiles, generators, lawn tractors, and other recreation vehicles—terminated based on insufficient information.
QMS, Inc.—belts for use in laser printers—terminated based on insufficient information.

A-588-814: Polyethylene Terephthalate Film, Sheet, and Strip:
Diafoil America Inc.—Diafoil AC-250—terminated based on insufficient information.

Country: People's Republic of China.

A-570-504: Petroleum Wax Candles:
Candles by Miss Montanna USA—"Mozart," "Chopin," and "Strauss" candles—terminated based on lack of interest by requester.

Pending Scope Clarification Requests as of March 31, 1992

Country: Canada.

A-122-601: Brass Sheet and Strip:
Hussey Copper Ltd., The Miller Company, Olin Corp. (Brass Group), Outokumpu American Brass, Revere Copper Products, the International Association of Machinists & Aerospace Workers, the International Union, Allied Industrial Workers of America (AFL-CIO), the Mechanics Educational Society of America (Local 56), and the United Steelworkers of America (AFL-CIO/CLC)—anti-circumvention inquiry to determine whether a producer of brass in Canada and a U.S. importer of brass are circumventing the antidumping order by importing Canadian brass plate, a product not included within the antidumping duty order, into the United States where it is rolled down slightly into brass sheet and strip.

Country: Argentina.

C-357-404: Certain Apparel:
FBM S.R.L., Proteo S.A., Desatex S.A., and Four Seasons Wear Inc.—men's knit cotton T-shirts, men's knit cotton tank tops, boys' knit cotton tank tops, women's knit cotton tank tops, men's knit cotton pants, boys' knit cotton pants, men's knit cotton shorts, boys' knit cotton shorts, women's knit cotton pants, girls' knit cotton pants, women's knit cotton shorts, and girl's knit cotton shorts.

Country: Federal Republic of Germany.

A-428-801: Antifriction Bearings:
SKF—certain "textile machinery components".
TIMCO Inc.—flexible roller bearings manufactured by the EICH Company.

Country: Italy.

A-475-703: Granular Polytetrafluroethylene (PTFE) Resin:
E.I. DuPont de Nemours & Company, Inc.—anti-circumvention inquiry to determine whether imports of granular PTFE raw polymer are circumventing the order.

A-570-806: Silicon Metal:
Petitioners (American Alloys, Inc.; Elkem Metals Company; Globe Metallurgical, Inc.; Silicon Metaltech Inc.; SiMETCO Inc.; and SKW Alloys, Inc.)—silicon metal with a silicon content of at least 89.00 percent but less than 99.99 percent.

Country: Korea.

A-580-601: Stainless Steel Cooking Ware:
Polar Ware Company—certain stainless steel stock pots and covers.
William H. Campbell Company—stainless steel 8 cup coffee

percolator.

C-580-602: Stainless Steel Cooking Ware:

William H. Campbell Company—stainless steel 8 cup coffee percolator.

Country: Taiwan

A-583-508: Porcelain-on-Steel Cookware:

Mr. Stove Ltd.— stove top grills.

A-583-603: Stainless Steel Cooking Ware:

William H. Campbell Company—"universal pan lid".

C-583-604: Stainless Steel Cooking Ware:

William H. Campbell Company—"universal pan lid".

Country: Japan.

A-588-055: Acrylic Sheet:

Sekisui America Corp.— ESLON DC PLATE manufactured by Sekisui Chemical Co., Ltd.

A-588-087: Portable Electric Typewriters:

Silver Seiko—"office typewriters" models EZ-40 and EZ-43.

A-588-405: Cellular Mobile Telephones and Subassemblies:

Matsushita Communication Industrial Co., Ltd. and its related entities (Matsushita)—Panasonic models EB-3530 and EB-3531 portable cellular telephones, including their accessories and their subassemblies and/or components.

A-588-707: Granular Polytetrafluroethylene (PTFE) Resin;

LNP Engineering Plastics, Inc., and ICI Americas Inc.—reprocessed PTFE powder.

A-588-804: Antifriction Bearing:

Brand Technologies—certain cartridge assemblies comprised of a machined shaft, a machined housing, and two standard bearings.

A-588-807: Industrial Belts and Components and Parts Thereof, Whether Cured or Uncured:

Nitta Industries Corp. and Nitta International Inc.—"conveyor belts".

BRECOflex Corp.—anti-circumvention inquiry to determine whether the order is being circumvented by the processing of belting into belts in Mexico before importation into the United States.

Matsushita Electra Corporation—certain belts used in consumer products that are round or flat, composed of rubber or plastics, but are not reinforced with a tensile member.

Q-588-810: Mechanical Transfer Presses:

Aida Engineering, Ltd.—FMX series cold forging press.

A-588-817: High Information Content Flat Panel Displays:

Sharp Corporation and Sharp Electronics Corporation—Sharp QA-1050 computer projection panel.

Micronics Computer Inc.—Mpression Color Overhead Projection Presentation System.

Interested parties are invited to comment on the accuracy of the list of pending scope clarification requests. Any comments should be submitted to the Assistant Secretary for Import Administration, International Trade Administration, room B-099, U.S. Department of Commerce, 14th Street and Constitution Avenue NW., Washington, DC 20230.

Dated: July 8, 1992.

Joseph A. Spetrini,

Deputy Assistant Secretary for Compliance.

[FR Doc. 92-17429 Filed 7-23-92; 8:45 am]

BILLING CODE 3510-DS-M

National Oceanic and Atmospheric Administration

Gulf of Mexico Fishery Management Council; Public Workshops

AGENCY: National Marine Fisheries Service, NOAA, Commerce. The Gulf of Mexico Fishery Management Council (Council) will hold public workshops during the month of August 1992 as indicated below. All workshops will begin at 7 p.m. and adjourn at 11 p.m. with the exception of the workshop on August 14 which is to begin at 6:30 p.m. and adjourn at 10:30 p.m. The Council will seek an industry consensus on solving problems in the red snapper fishery.

August 3—7 p.m. to 11 p.m.—Port Isabel Community College, corner of Yturria and Maxan, Port Isabel, TX;

August 4—7 p.m. to 11 p.m.—University of Texas, Visitor's Center Auditorium, Marine Science Institute, 750 Channel View Drive, Port Aransas, TX;

August 5—7 p.m. to 11 p.m.—Best Western Beachfront Inn, 5914 Seawall Boulevard, Galveston, TX;

August 6—7 p.m. to 11 p.m.—Cameron Elementary School Auditorium, Main Street (Highway 182), Cameron, LA;

August 7—7 p.m. to 11 p.m.—Larose Regional Park, 2001 East 5th Street, Larose, LA;

August 10—7 p.m. to 11 p.m.—Belle Chasse Auditorium, Plaquemines Parish Government, 106 Avenue G, Belle Chasse, LA;

August 11—7 p.m. to 11 p.m.—Mississippi Bureau of Marine Resources, 2620 Beach Boulevard, Conference Room, Biloxi, MS;

August 12—7 p.m. to 11 p.m.—Adult Activity Center, 260 Clubhouse Drive, Gulf Shores, AL;

August 13—7 p.m. to 11 p.m.—Gulf Coast Community College, Student Union Building East— "Lecture Hall", 5230 West Highway 96, Panama City, FL; and

August 14—6:30 p.m. to 10:30 p.m.—City Hall Auditorium, 300 Municipal Drive, Madeira Beach, FL.

For more information contact Steven M. Atran, Gulf of Mexico Fishery Management Council, 5401 West Kennedy Boulevard, Suite 331, Tampa, FL; telephone: (813) 228-2815.

Dated: July 20, 1992.

David S. Crestin,

Acting Director, Office of Fisheries Conservation and Management, National Marine Fisheries Service.

[FR Doc. 92-17469 Filed 7-23-92; 8:45 am]

BILLING CODE 3510-22-M

COMMITTEE FOR PURCHASE FROM THE BLIND AND OTHER SEVERELY HANDICAPPED

Procurement List Proposed Additions

AGENCY: Committee for Purchase from the Blind and Other Severely Handicapped.

ACTION: Proposed additions to procurement list.

SUMMARY: The Committee has received proposals to add to the Procurement List commodities and services to be furnished by nonprofit agencies enploying persons who are blind or have other severe disabilities.

COMMENTS MUST BE RECEIVED ON OR BEFORE: August 24, 1992.

ADDRESSES: Committee for Purchase from the Blind and Other Severely Handicapped, Crystal Square 3, suite 403, 1735 Jefferson Davis Highway, Arlington, Virginia 22202-3509.

FOR FURTHER INFORMATION CONTACT: Beverly Milkman (703) 557-1145.

SUPPLEMENTARY INFORMATION: This notice is published pursuant to 41 U.S.C. 47(a)(2) and 41 CFR 51-2.3. Its purpose is to provide interested persons an opportunity to submit comments on the possible impact of the proposed actions.

If the Committee approves the proposed additions, all entities of the Federal Government (except as otherwise indicated) will be required to procure the commodities and services listed below from nonprofit agencies employing persons who are blind or have other severe disabilities.

I certify that the following action will not have a significant impact on a substantial number of small entities. The major factors considered for this certification were:

1. The action will not result in any additional reporting, recordkeeping or other compliance requirements for small entities other than the small organizations that will furnish the commodities and services to the Government.

2. The action does not appear to have a severe economic impact on current contractors for the commodities and services.

3. The action will result in authorizing small entities to furnish the commodities and services to the Government.

4. There are no known regulatory alternatives which would accomplish the objectives of the Javits-Wagner-O'Day Act (41 U.S.C. 46–48c) in connection with the commodities and services proposed for addition to the Procurement List.

Comments on this certification are invited. Commenters should identify the statement(s) underlying the certification on which they are providing additional information.

It is proposed to add the following commodities and services to the Procurement List:

Commodities

Pallet Cover, Polyethylene
3990–00–930–1481
Nonprofit Agency: Northwest Center for the Retarded, Seattle, Washington
Clamp, Loop
5340–01–143–9255
5340–01–106–2735
Nonprofit Agency: United Cerebral Palsy of King-Snohomish Counties, Seattle, Washington
Towel, Machinery Wiping
7920–01–177–3633
(All Government's requirements except Palmetto, GA)
Nonprofit Agency: East Texas Lighthouse for the Blind, Tyler, Texas

Services

Grounds Maintenance
Naval Station
Mobile, Alabama
Nonprofit Agency: Mobile Association for the Blind, Mobile, Alabama
Janitorial/Custodial
Federal Building
Basement and Floors 7 & 8
230 North First Avenue
Phoenix, Arizona
Nonprofit Agency: Tempe Center for Habilitation, Inc., Tempe, Arizona
Janitorial/Custodial
USDA Forest Service
Humboldt Nursery
4886 Cottage Grove Avenue
McKinleyville, California
Nonprofit Agency: Redwoods United Workshop, Inc., Arcata, California
Janitorial/Custodial
Mifflin County USARC
Lewistown, Pennsylvania
Nonprofit Agency: Juniata Branch, Pennsylvania Association for the Blind, Lewistown, Pennsylvania.

Beverly L. Milkman,
Executive Director.

[FR Doc. 92–17563 Filed 7–23–92; 8:45 am]

BILLING CODE 6820–33–M

Procurement List Proposed Additions

AGENCY: Committee for Purchase from the Blind and Other Severely Handicapped.

ACTION: Proposed additions to procurement list.

SUMMARY: The Committee has received a proposal to add to the Procurement List commodities to be furnished by a nonprofit agency employing persons who are blind or have other severe disabilities.

COMMENTS MUST BE RECEIVED ON OR BEFORE: August 24, 1992.

ADDRESSES: Committee for Purchase from the Blind and Other Severely Handicapped, Crystal Square 5, suite 1107, 1755 Jefferson Davis Highway, Arlington, Virginia 22202–3509.

FOR FURTHER INFORMATION CONTACT: Beverly Milkman (703) 557–1145.

SUPPLEMENTARY INFORMATION: This notice is published pursuant to 42 U.S.C. 47(a)(2) and 41 CFR 51–2.3. Its purpose is to provide interested persons an opportunity to submit comments on the possible impact of the proposed action. If the Committee approves the proposed addition, all entities of the Federal Government (except as otherwise indicated) will be required to procure the commodities listed below from a nonprofit agency employing individuals who are blind or have other severe disabilities.

I certify that the following action will not have a significant impact on a substantial number of small entities. The major factors considered for this certification were:

1. The action will not result in any additional reporting, recordkeeping or other compliance requirements for small entities other than the small organization that will furnish the commodities to the Government.

2. The action will result in authorizing a small entity to furnish the commodities to the Government.

3. There are no known regulatory alternatives which would accomplish the objectives of the Javits-Wagner-O'Day Act (41 U.S.C. 46–48c) in connection with the commodities proposed for addition to the Procurement List.

Comments on this certification are invited. Commenters should identify the statement(s) underlying the certification on which they are providing additional information.

It is proposed to add the following commodities to the Procurement List:

Splint, Arm, Pneumatic
6515–00–935–6592
Nonprofit Agency: York Industries for the Blind, York, Pennsylvania
Splint, Leg, Pneumatic
6515–00–935–6593
Nonprofit Agency: York Industries for the Blind, York, Pennsylvania.

Beverly L. Milkman,
Executive Director.

[FR Doc. 92–17564 Filed 7–23–92; 8:45 am]

BILLING CODE 6820–33–M

Procurement List Additions and Deletion

AGENCY: Committee for Purchase from the Blind and Other Severely Handicapped.

ACTION: Additions to and deletion from procurement list.

SUMMARY: This action adds to the Procurement List a commodity and services to be furnished by nonprofit agencies employing persons who are blind or have severe disabilities, and deletes from the Procurement List a commodity previously furnished by such agencies.

EFFECTIVE DATE: August 24, 1992.

ADDRESSES: Committee for Purchase from the Blind and Other Severely Handicapped, Crystal Square 3, suite 403, 1735 Jefferson Davis Highway, Arlington, Virginia 22202–3509.

FOR FURTHER INFORMATION CONTACT: Beverly Milkman (703) 557–1145.

SUPPLEMENTARY INFORMATION: On February 28, May 8, 15, 22, 29 and June 5, 1992, the Committee for Purchase from the Blind and Other Severely Handicapped published notices (57 FR 6814, 19888, 20812, 21768, 22727 and 24025) of proposed additions to and deletion from the Procurement List:

Additions

After consideration of the material presented to it concerning capability of qualified nonprofit agencies to provide the commodity and services at a fair

market price and impact of the additions on the current or most recent contractors, the Committee has determined that the commodity and services listed below are suitable for procurement by the Federal Government under 41 U.S.C. 46–48c and 41 CFR 51–2.4.

I certify that the following action will not have a significant impact on a substantial number of small entities. The major factors considered for this certification were:

1. The action will not result in any additional reporting, recordkeeping or other compliance requirements for small entities other than the small organizations that will furnish the commodity and services to the Government.

2. The action will not have a severe economic impact on current contractors for the commodity and services.

3. The action will result in authorizing small entities to furnish the commodity and services to the Government.

4. There are no known regulatory alternatives which would accomplish the objectives of the Javits-Wagner-O'Day Act (41 U.S.C. 46–48c) in connection with the commodity and services proposed for addition to the Procurement List.

Accordingly, the following commodity and services are hereby added to the Procurement List:

Commodity

Kit, Wee-Deliver Starter
P.S. Item T012M

Services

Grounds Maintenance
Naval Station
Treasure Island and Yerba Buena Island
San Francisco, California

Grounds maintenance for the following locations:

Marine Corps Base, Camp LeJeune, North Carolina
Marine Corps Air Station, Jacksonville, North Carolina
Janitorial/Custodial, Federal Building, U.S. Post Office and Courthouse, Council Bluffs, Iowa
Janitorial/custodial, National Archives and Records Center, 3150 Springboro Road, Dayton, Ohio
Recycling of Cassette Mailing Containers, Library of Congress, National Library Service for the Blind and Physically Handicapped, Washington, DC

This action does not affect contracts awarded prior to the effective date of this addition or options exercised under those contracts.

Deletion

After consideration of the relevant matter presented, the Committee has determined that the commodity listed below is no longer suitable for procurement by the Federal Government under 41 U.S.C. 46–48c and 41 CFR 51–2.4.

Accordingly, the following commodity is hereby deleted from the Procurement List:

Pallet, Wood
3990–00–366–6806.

Beverly L. Milkman,
Executive Director.

[FR Doc. 92–17565 Filed 7–23–92; 8:45 am]

BILLING CODE 6820-33-M

DEPARTMENT OF DEFENSE

Corps of Engineers, Department of the Army

Intent To Prepare a Draft Environmental Impact Statement (DEIS) for the Milwaukee Metropolitan Area, Wisconsin, Flood Control Study

AGENCY: U.S. Army Corps of Engineers, DOD.

ACTION: Notice of intent to prepare a draft environmental impact statement (DEIS).

SUMMARY: Flood control measures are proposed for a 1.9 mile reach of Lincoln Creek in Milwaukee, Wisconsin. Along this reach, four major floods over the past 30 years have affected up to 1,600 homes, some of which are also affected by many smaller floods. Alternatives under consideration to reduce flooding and flood damages include channel improvements with a concrete channel lining, and channel improvements with a natural channel lining in combination with stormwater detention.

FOR FURTHER INFORMATION CONTACT: Questions about the DEIS can be directed to: Mr. Paul H. Allerding; U.S. Army Engineer District, Detroit; Environmental Analysis Branch; P.O. Box 1027; Detroit, Michigan 48231–1027; Telephone: 313–226–7590.

SUPPLEMENTARY INFORMATION: The Milwaukee Metropolitan Area, Wisconsin, Flood Control Study is authorized by a resolution of the Committee on Public Works and Transportation of the U.S. House of Representatives, adopted September 8, 1988.

The Milwaukee Metropolitan Area Study focuses on Lincoln Creek, a small stream about 10 miles in length, which is a tributary of the Milwaukee River. The study reach extends 1.9 miles along Lincoln Creek from West Hampton Avenue in Milwaukee, downstream to North 35th Street. Along this reach, four major floods over the past 30 years have affected up to 1,600 homes, some of which are also affected by many smaller floods.

Preliminary alternatives that were considered for reduction of flooding and flood damages along the study reach included levees and floodwalls; a diversion channel; a retention basin; channel improvements; structure floodproofing, elevation, and removal; and combinations of these measures. Screening of alternatives for engineering, environmental, economic, and institutional feasibility eliminated all preliminary alternatives, except some form of channel improvements, from further study.

Alternatives currently under consideration include channel improvements with a concrete channel lining, channel improvements with a natural channel lining in combination with stormwater detention, and no Federal action. Both channel improvements alternatives would require enlarging the existing creek channel to provide increased flood carrying capacity. In addition, several bridges that constrict the channel would require modification or replacement.

The natural channel alternative could include combinations of earth, gravel, and bedrock channel lining with turf sideslopes. The natural channel may also require a limited amount of dikes and floodwalls in areas where the banks are low and some riprap in areas of high erosion potential. Possible stormwater detention basin sites include various parts and other open spaces in the study area.

Significant issues that will be analyzed during preparation of the DEIS include potential impacts on wetlands, water quality, fish and wildlife habitat, cultural resources, recreation, and aesthetics.

The proposed actions will be reviewed for compliance with the Fish and Wildlife Act of 1956; the Fish and Wildlife Coordination Act of 1958; the National Historic Preservation Act of 1966; the National Environmental Policy Act (NEPA) of 1969; the Clean Air Act of 1970; the Coastal Zone Management Act of 1972; the Endangered Species Act of 1973; the Water Resources Development Act of 1976; the Clean Water Act of 1977; Executive Order 11593, Protection and Enhancement of the Cultural Environment, May 1971; Executive Order 11988, Flood Plain Management, May 1977; Executive Order 11990, Wetland Protection, May 1977; and

Corps of Engineers, Dept. of the Army, 33 CFR part 230, Environmental Quality, Policy and Procedure for Implementing NEPA.

All affected Federal, State, and local agencies, Indian tribes, and other private organizations and parties are invited to participate in the proposed project review. Questions, concerns, and comments may be directed to the address given above. A public workshop is being planned for the fall of 1992. It is anticipated that the DEIS would be available for public review in September 1994.

Dated: July 10, 1992.

Richard Kanda,

Colonel, U.S. Army, District Engineer.

[FR Doc. 92-17603 Filed 7-23-92; 8:45 am]

BILLING CODE 3710-GA-M

DEPARTMENT OF DEFENSE

GENERAL SERVICES ADMINISTRATION

NATIONAL AERONAUTICS AND SPACE ADMINISTRATION

[OMB Control No. 9000-0027]

OMB Clearance Request for Value Engineering Requirements

AGENCIES: Department of Defense (DOD), General Services Administration (GSA), and National Aeronautics and Space Administration (NASA).

ACTION: Notice of request for an extension to an existing OMB clearance (9000-0027), Value Engineering requirements.

SUMMARY: Under the provisions of the Paperwork Reduction Act of 1980 (44 U.S.C. chapter 35), the Federal Acquisition Regulation (FAR) Secretariat has submitted to the Office of Management and Budget (OMB) a request for an extension of a currently approved information collection requirement concerning Value Engineering Requirements.

FOR FURTHER INFORMATION CONTACT: Beverly Fayson, Office of Federal Acquisition Policy, GSA, (202) 501-4755.

SUPPLEMENTARY INFORMATION:

A. Purpose

Value engineering is the technique by which contractors (1) voluntarily suggest methods for performing more economically and share in any resulting savings or (2) are required to establish a program to identify and submit to the Government methods for performing more economically. These recommendations are submitted to the Government as value engineering change proposals (VECP's) and they must include specific information. This information is needed to enable the Government to evaluate the VECP and, if accepted, to arrange for an equitable sharing plan.

B. Annual Reporting Burden

The annual reporting burden is estimated as follows: Respondents, *400*; responses per respondent, *4*; total annual responses, *1,600*; preparation hours per response, *30*; and total response burden hours, *48,000*.

Obtaining Copies of Proposals

Requester may obtain copies of OMB applications or justifications from the General Services Administration, FAR Secretariat (VRS), room 4037, Washington, DC 20405, telephone (202) 501-4755. Please cite OMB Control No. 9000-0027, Value Engineering Requirements, in all correspondence.

Dated: July 15, 1992.

Beverly Fayson,

FAR Secretariat.

[FR Doc. 92-17451 Filed 7-23-92; 8:45 am]

BILLING CODE 6820-34-M

DEPARTMENT OF EDUCATION

Notice of Proposed Information Collection Requests

AGENCY: Department of Education.

ACTION: Notice of proposed information collection requests.

SUMMARY: The Director, Office of Information Resources Management, invites comments on the proposed information collection requests as required by the Paperwork Reduction Act of 1980.

DATES: Interested persons are invited to submit comments on or before August 24, 1992.

ADDRESSES: Written comments should be addressed to the Office of Information and Regulatory Affairs, Attention: Dan Chenok: Desk Officer, Department of Education, Office of Management and Budget, 726 Jackson Place, NW., room 3208, New Executive Office Building, Washington, DC 20503. Requests for copies of the proposed information collection requests should be addressed to Cary Green, Department of Education, 400 Maryland Avenue, SW., room 5624, Regional Office Building 3, Washington, DC 20202.

FOR FURTHER INFORMATION CONTACT: Cary Green, (202) 708-5174.

SUPPLEMENTARY INFORMATION: Section 3517 of the Paperwork Reduction Act of 1980 (44 U.S.C. Chapter 35) requires that the Office of Management and Budget (OMB) provide interested Federal agencies and the public an early opportunity to comment on information collection requests. OMB may amend or waive the requirement for public consultation to the extent that public participation in the approval process would defeat the purpose of the information collection, violate State or Federal law, or substantially interfere with any agency's ability to perform its statutory obligations. The Director of the Information Resources Management Service, publishes this notice containing proposed information collection requests prior to submission of these requests to OMB. Each proposed information collection, grouped by office, contains the following:

(1) Type of review requested, e.g., new, revision, extension, existing or reinstatement; (2) Title; (3) Frequency of collection; (4) The affected public; (5) Reporting burden; and/or (6) Recordkeeping burden; and (7) Abstract. OMB invites public comment at the address specified above. Copies of the requests are available from Cary Green at the address specified above.

Dated: July 20, 1992.

Cary Green,

Director, Information Resources Management Service.

Office of Postsecondary Education

Type of Review: New.

Title: Performance Report for the Strengthening Historically Black Colleges and Universities Program.

Frequency: One time.

Affected Public: Non-profit institutions.

Reporting Burden: Responses: 98. *Burden Hours:* 2,352. *Recordkeeping Burden: Recordkeepers:* 0. *Burden Hours:* 0.

Abstract: This information is required of grantees under the Strengthening Historically Black Colleges and Universities Program. The Department will use the information to monitor the effectiveness of activities in achieving growth and self-sufficiency.

Office of Bilingual Education and Minority Language Affairs

Type of Review: New.

Title: Study of Content for English as a Second Language.

Frequency: On Occasion.

Affected Public: Non-profit institutions.

Reporting Burden: Responses: 2,000. *Burden Hours:* 333. *Recordkeeping Burden: Recordkeepers:* 0. *Burden Hours:* 0.

Abstract: This study will be used to gather information about programs in the United States public schools that provide instructions in English as a second language. The Department will use the information to monitor program effectiveness and improvement.

[FR Doc. 92-17473 Filed 7-23-92; 8:45 am]

BILLING CODE 4000-01-M

[CFDA Nos.: 84.019, 84.022]

Fulbright-Hays Training Grant Programs: Faculty Research Abroad and Doctoral Dissertation Research Abroad; Notice Inviting Applications for New Awards for Fiscal Year (FY) 1993

Purpose of Programs: Applications are invited for new awards under the Fulbright-Hays Training Grant Programs for Fiscal Year 1993. The Fulbright-Hays Training Grant Programs include the Faculty Research Abroad Fellowship Program and the Doctoral Dissertation Research Abroad Fellowship Program. Authority for these programs is contained in the Mutual Educational and Cultural Exchange Act of 1961 (22 U.S.C. 2452(b)(6)).

The Faculty Research Abroad Fellowship Program offers opportunities to faculty members of institutions of higher education for research and study abroad in modern foreign languages and area studies.

The Doctoral Dissertation Research Abroad Fellowship Program provides opportunities for graduate students to engage in full-time dissertation research abroad in modern foreign languages and area studies.

Eligible Applicants: For Faculty Research Abroad Fellowship and Doctoral Dissertation Research Abroad Fellowship Programs, eligible applicants are institutions of higher education.

Deadline for Transmittal of Applications: October 30, 1992.

Applications Available: August 31, 1992.

FULBRIGHT-HAYS TRAINING GRANT PROGRAMS

Title and CFDA Number	Available Funds	Estimated Range of Awards	Estimated Average Size of Awards	Estimated Number of Awards	Project Period in Months
Faculty Research Abroad (84.019)	$910,000 [1] Rs. 1,131,390	$6,000 to 60,000	$31,590	30	3 to 12
Doctoral Dissertation Research Abroad, (84.022)	$1,800,000 [1] Rs. 2,359,450	$3,000 to 60,000	$25,050	75	6 to 12

[1] Rupee allocation from the U.S.-India Fund.

Note: The Department is not bound by any estimates in this notice.

Applicable Regulations: Regulations applicable to these programs include the following:

(a) Education Department General Administrative Regulations (EDGAR), 34 CFR parts 74, 75, 77, 81, 82, 85 and 86; and

(b) Regulations governing the Doctoral Dissertation Research Abroad Fellowship program in 34 CFR part 662 and the Faculty Research Abroad Fellowship program in 34 CFR part 663.

Priorities: The Regulations governing the Faculty Research Abroad Fellowship Program (34 CFR 663.32(c)) and the Doctoral Dissertation Research Abroad Fellowship Program (34 CFR 662.32(c)) authorize the Secretary to establish priorities for the selection of applications.

Pursuant to 34 CFR 75.105(c)(3), the Secretary gives an absolute preference to Faculty Research Abroad Fellowship and Doctoral Dissertation Research Abroad Fellowship applications that meet the following priority: Research projects that focus on Africa, East Asia, Southeast Asia and the Pacific, South Asia, the Near East, East Central Europe (i.e., Poland, Czechoslovakia, Hungary, Bulgaria, Albania, Rumania and the new republics which were formerly part of Yugoslavia), the Baltic States and other new republics of the former Union of Soviet Socialist Republics, and the Western Hemisphere. Applications that propose projects focused on Western Europe will not be funded.

Under 34 CFR 75.105(c)(3), in this competition the Secretary funds only applications that meet this absolute priority.

In accordance with 34 CFR 75.105(c)(2), the Secretary also gives a competitive preference to Faculty Research Abroad Fellowship and Doctoral Dissertation Research Abroad Fellowship applications that meet the following competitive priority: projects that emphasize economics, geography, or sociology.

As authorized under 34 CFR 75.105(c)(2)(i), the Secretary may award five selection points to an application that meets this competitive priority in a particularly effective way, in addition to any points awarded to the application under the selection criteria of the Faculty Research Abroad Fellowship and Doctoral Dissertation Research Abroad Fellowship Programs.

For Applications or Information Contact: Mr. Robert Dennis (Faculty Research Abroad Fellowship Program), Telephone (202) 708-7279; Ms. Vida Moattar (Doctoral Dissertation Research Abroad Fellowship Program), Telephone (202) 708-9291, Department of Education, Center for International Education, 400 Maryland Avenue SW., Washington, DC 20202-5331. Deaf and hearing impaired individuals may call the Federal Dual Relay Service at 1-800-877-8339 (in the Washington, DC area code, telephone 708-9300, between 8 a.m. and 7 p.m., eastern time).

Program Authority: 22 U.S.C. 2452(b)(6).

Dated: July 20, 1992.

Carolynn Reid-Wallace,

Assistant Secretary for Postsecondary Education.

[FR Doc. 92-17474 Filed 7-23-92; 8:45 am]

BILLING CODE 4000-01-M

National Assessment Governing Board; Teleconference Meeting

AGENCY: National Assessment Governing Board; Education.

ACTION: Notice of teleconference meeting.

SUMMARY: This notice sets forth the schedule and proposed agenda of forthcoming teleconference meeting of Subject Area Committee #1 of the

National Assessment Governing Board. This notice also describes the functions of the Board. Notice of this meeting is required under section 10(a)(2) of the Federal Advisory Committee Act. This document is intended to notify the general public of their opportunity to attend.

DATE: July 28, 1992.

Time: 12 noon, (e.d.t.), to adjournment, approximately 2 p.m.

Location: National Assessment Governing Board, 800 North Capitol Street NW., suite 825, Washington, DC.

FOR FURTHER INFORMATION CONTACT: Mary Ann Wilmer, Operations Officer, National Assessment Governing Board, 800 North Capitol Street, suite 825, Washington, DC 20002-4233, Telephone: (202) 357-6938.

SUPPLEMENTARY INFORMATION: The National Assessment Governing Board is established under section 406(i) of the General Education Provisions Act (GEPA) as amended by section 3403 of the National Assessment of Educational Progress Improvement Act (NAEP Improvement Act), title III-C of the Augustus F. Hawkins—Robert T. Stafford Elementary and Secondary School Improvement Amendments of 1988 (Pub. L. 100-297), (20 U.S.C. 1221e-1).

The Board is established to advise the Commissioner of the National Center for Education Statistics on policies and actions needed to improve the form and use of the National Assessment of Educational Progress, and develop specifications for the design, methodology, analysis, and reporting of test results. The Board also is responsible for selecting subject areas to be assessed, identifying the objectives for each age and grade tested, and establishing standards and procedures for interstate and national comparisons. The Subject Area Committee #1 of the National Assessment Governing Board (the Board) will meet in an open session via telephone conference on July 28, 1992 (e.d.t.) to take final action on the 1994 U.S. History Specifications and to formulate recommendations to the Executive Committee. Facilities will be provided so the public will have access to the Committees' deliberations.

Records are kept of all Board proceedings and are available for public inspection at the U.S. Department of Education, National Assessment Governing Board, 800 North Capitol Street NW., Washington, DC, from 8:30 a.m. to 5 p.m.

Dated: July 20, 1992.

Roy Truby,

Executive Director, National Assessment Governing Board.

[FR Doc. 92-17438 Filed 7-23-92; 8:45 am]

BILLING CODE 4000-01-M

DEPARTMENT OF ENERGY

Determination of Noncompetitive Financial Assistance

AGENCY: Department of Energy (DOE).

ACTION: Notice.

SUMMARY: DOE announces that pursuant to 10 CFR 600.7(b) it intends to renew on a noncompetitive basis a grant to Jackson State University (JSU) as the lead institution on behalf of a consortium involving JSU, Ana G. Mendez Educational Foundation (AFMEF), and Lawrence Berkeley Laboratory (LBL) of the University of California to improve the research and instructional programs in mathematics, natural science, and computer science at JSU and the three institutions of higher education which comprise the AFMEF—the University of Turabo, Metropolitan University, and the Puerto Rico Junior College. The grant renewal will continue the project through May 31, 1993. The estimated amount is $1,666,665.

PROCUREMENT REQUEST NUMBER: 05-92ER75274.001.

PROJECT SCOPE: The grant renewal is to continue a collaborative research and manpower development effort between JSU and AFMEF in response to Congressional direction included in the conference report on the Energy and Water Development Appropriation Act of 1991. Eligibility for this award is, therefore, restricted JSU.

FOR FURTHER INFORMATION CONTACT: Gregory A. Mills, Energy Programs Division, ER-113, U.S. Department of Energy, Oak Ridge, Tennessee 37831-8614, (615) 576-0951.

Issued in Oak Ridge, Tennessee, on July 16, 1992.

Don R. Sloan,

Deputy Director, Procurement and Contracts Division, Oak Ridge Field Office.

[FR Doc. 92-17556 Filed 7-23-92; 8:45 am]

BILLING CODE 6450-01-M

Energy Information Administration

Agency Information Collections Under Review by the Office of Management and Budget

AGENCY: Energy Information Administration.

ACTION: Notice of requests submitted for review by the Office of Management and Budget.

SUMMARY: The Energy Information Administration (EIA) has submitted the energy information collection(s) listed at the end of this notice to this Office of Management and Budget (OMB) for review under provisions of the Paperwork Reduction Act (Pub. L. No. 96-511, 44 U.S.C. 3501 *et seq.*). The listing does not include collections of information contained in new or revised regulations which are to be submitted under section 3504(h) of the Paperwork Reduction Act, nor management and procurement assistance requirements collected by the Department of Energy (DOE).

Each entry contains the following information:

(1) The sponsor of the collection (a DOE component which term includes the Federal Energy Regulatory Commission (FERC));

(2) Collection number(s);

(3) Current OMB docket number (if applicable);

(4) Collection title;

(5) Type of request, e.g., new, revision, extension, or reinstatement;

(6) Frequency of collection;

(7) Response obligation, i.e., mandatory, voluntary, or required to obtain or retain benefit;

(8) Affected public;

(9) An estimate of the number or respondents per report period;

(10) An estimate of the number or responses per respondent annually;

(11) AN estimate of the average hours per response;

(12) The estimated total annual respondent burden; and

(13) A brief abstract describing the proposed collection and the respondents.

DATES: Comments must be filed on or before August 24, 1992. If you anticipate that you will be submitting comments but find it difficult to do so within the time allowed by this notice, you should advise the OMB DOE Desk Officer listed below of your intention to do so, as soon as possible. The Desk Officer may be telephoned at (202) 395-3084. (Also, please notify the EIA contact listed below.)

ADDRESSES: Address comments to the Department of Energy Desk Officer, Office of Information and Regulatory Affairs, Office of Management and Budget, 726 Jackson Place NW., Washington, DC 20503. (Comments should also be addressed to the Office of Statistical Standards at the address below.)

FOR FURTHER INFORMATION AND COPIES OF RELEVANT MATERIALS CONTACT: Jay Casselberry, Office of Statistical Standards, (EI-73), Forrestal Building, U.S. Department of Energy, Washington, DC 20585. Mr. Casselberry may be telephoned at (202) 254-5348.

SUPPLEMENTARY INFORMATION: The first energy information collection submitted to OMB for review was:

1. Federal Energy Regulatory Commission.
2. FERC-550.
3. 1902-0089.
4. Oil Pipeline Rates: Tariff Filings.
5. Extension.
6. On occasion.
7. Mandatory.
8. Businesses or other for-profit.
9. 140 respondents.
10. 2.3 responses.
11. 20 hours per response.
12. 6,500 hours.
13. The purpose of this tariff filing requirement is to provide data to be used by the Commission to establish just and reasonable rates that may be charged by jurisdictional oil companies.

The second energy information collection submitted to OMB for review was:

1. Federal Energy Regulatory Commission.
2. FERC-521.
3. 1902-0087.
4. Payments for Benefits from Headwater Improvements.
5. Extension.
6. On occasion.
7. Mandatory.
8. State or local governments, Businesses or other for-profit, and Federal agencies or employees.
9. 14 respondents.
10. 1 response.
11. 33.60 hours per response.
12. 470 hours.
13. To carry out the legislative requirements of section 10(f) of the Federal Power Act, which directs the Commission to determine the benefits that have been received by downstream parties from the operation of storage reservoir or other headwater improvements, and to assess the downstream beneficiaries for a part of the annual charges for interest, maintenance and depreciation.

Statutory Authority: Sec. 5(a), 5(b), 13(b), and 52, Pub. L. No. 93-275, Federal Energy Administration Act of 1974, 15 U.S.C. 764(a), 764(b), 772(b), and 790a.

Issued in Washington, DC, July 15, 1992.

Yvonne M. Bishop,

Director, Statistical Standards, Energy Information Administration.

Agency Information Collections Under Review by the Office of Management and Budget

AGENCY: Energy Information Administration.

ACTION: Notice of request submitted for review by the Office of Management and Budget.

SUMMARY: The Energy Information Administration (EIA) has submitted the energy information collection(s) listed at the end of this notice to the Office of Management and Budget (OMB) for review under provisions of the Paperwork Reduction Act (Pub. L. No. 96-511, 44 U.S.C. 3501 *et seq.*). The listing does not include collections of information contained in new or revised regulations which are to be submitted under section 3504(h) of the Paperwork Reduction Act, nor management and procurement assistance requirements collected by the Department of Energy (DOE).

Each entry contains the following information:

(1) The sponsor of the collection (a DOE component which term includes the Federal Energy Regulatory Commission (FERC));

(2) Collection number(s);

(3) Current OMB docket number (if applicable);

(4) Collection title;

(5) Type of request, e.g., new, revision, extension, or reinstatement;

(6) Frequency of collection;

(7) Response obligation, i.e., mandatory, voluntary, or required to obtain or retain benefit;

(8) Affected public;

(9) An estimate of the number of respondents per report period;

(10) an estimate of the number of responses per respondent annually;

(11) An estimate of the average hours per response;

(12) The estimated total annual respondent burden; and

(13) A brief abstract describing the proposed collection and the respondents.

DATES: Comments must be filed on or before August 24, 1992. If you anticipate that you will be submitting comments but find it difficult to do so within the time allowed by this notice, you should advise the OMB DOE Desk Officer listed below of your intention to do so, as soon as possible. The Desk Officer may be telephoned at (202) 395-3084. (Also, please notify the EIA contact listed below.)

ADDRESSES: Address comments to the Department of Energy Desk Officer, Office of Information and Regulatory Affairs, Office of Management and Budget, 726 Jackson Place NW., Washington, DC 20503. (Comments should also be addressed to the Office of Statistical Standards at the address below.)

FOR FURTHER INFORMATION AND COPIES OF RELEVANT MATERIALS CONTACT: Jay Casselberry, Office of Statistical Standards, (EI-73), Forrestal Building, U.S. Department of Energy, Washington, DC 20585. Mr. Casselberry may be telephoned at (202) 254-5348.

SUPPLEMENTARY INFORMATION: The energy information collection submitted to OMB for review was:

1. Fossil Energy.
2. FE-329R.
3. 1901-0297.
4. Powerplant and Industrial Fuel Use Act (FUA) of 1978; Final Rule.
5. Extension.
6. On occasion.
7. Mandatory.
8. Businesses or other profit.
9. 30 respondents.
10. 1 response.
11. 20 hours per response.
12. 600 hours.
13. FE-329R provides the procedures for filing a petition requesting a temporary or permanent exemption under sections 211 and 311 of the Powerplant and Industrial Fuel Use Act of 1978. Petitioners are owners or operators of new or existing powerplants.

Statutory Authority: Sec. 5(a), 5(b), 13(b), and 52, Pub. L. No. 93-275, Federal Energy Administration Act of 1974, 15 U.S.C. § 764(a), 764(b), 772(b), and 790a.

Issued in Washington, DC, July 17, 1992.

Yvonne M. Bishop,

Director, Statistical Standards, Energy Information Administration.

[FR Doc. 92-17558 Filed 7-23-92; 8:45 am]

BILLING CODE 6450-01-M

Cases Filed; Office of Hearing and Appeals, Week of July 3 Through July 10, 1992

During the week of July 3 through July 10, 1992, the appeals and applications for exception or other relief listed in the appendix to this notice were filed with the Office of Hearings and Appeals of the Department of Energy. Submissions inadvertently omitted from earlier lists have also been included.

Under DOE procedural regulations, 10 CFR part 205, any person who will be aggrieved by the DOE action sought in these cases may file written comments on the application within ten days of service of notice, as prescribed in the procedural regulations. For purposes of the regulations, the date of service of notice is deemed to be the date of publication of this Notice or the date of receipt by an aggrieved person of actual notice, whichever occurs first. All such comments shall be filed with the Office of Hearings and Appeals, Department of Energy, Washington, DC 20585.

Dated: July 17, 1992.

George B. Breznay,

Director, Office of Hearings and Appeals.

LIST OF CASES RECEIVED BY THE OFFICE OF HEARINGS AND APPEALS

[Week of July 3 through July 10, 1992]

Date	Name and Location of Applicant	Case No.	Type of Submission
Jul. 1, 1992	Gulf/Rosamilia Brothers Gulf, Woodbridge, VA	RR300-185	Request for Modification/Rescission in the Gulf Refund Proceeding. If Granted: The April 6, 1992 Dismissal Letter (Case No. RF300-13295) issued to Rosamilia Brothers Gulf would be modified regarding the firm's application for refund submitted in the Gulf refund proceeding.
Jul. 6, 1992	Gulf/Rosboro Gulf, Atlantic Beach, FL	RR300-184	Request for Modification/Rescission in the Gulf Refund Proceeding. If Granted: The July 1, 1992 Dismissal Letter (Case No. RF300-14856) issued to Roseboro Gulf would be modified regarding the firm's application for refund submitted in the Gulf refund proceeding.
Jul. 9, 1992	Gulf/Hammond County Store, White City, FL	RR300-186	Request for Modification/Rescission in the Gulf Refund Proceeding. If Granted: The July 1, 1992 Dismissal Letter (Case No. RF300-14783) issued to Hammond County Store would be modified regarding the firm's application for refund submitted in the Gulf refund proceeding.
Jul. 9, 1992	Swiss Valley Farms, Co., Davenport, IA	RR272-97	Request for Modification/Rescission in the Gulf Refund Proceeding. If Granted: The June 19, 1992 Decision and Order (Case No. RF272-78231) issued to Swiss Valley Farms Company would be modified regarding the firm's application for refund submitted in the Crude Oil refund proceeding.

REFUND APPLICATIONS RECEIVED

Date Received	Name of Refund Proceeding/Name of Refund Application	Case Number
6/30/92	Norton Co.	RA272-52
7/2/92	James Karasis Super 100	RF342-243
7/2/92	Sinclair Marketing, Inc.	RF342-244
7/3/92 THRU 7/10/92	Crude Oil Applications Received	RF272-93562 THRU RF272-93738
7/3/92 THRU 7/10/92	Texaco Refund Applications Received	RF321-18833 THRU RF321-18909
7/3/92 THRU 7/10/92	Gulf Oil Refund Applications Received	RF300-20337 THRU RF300-20358
7/3/92 THRU 7/10/92	Atlantic Richfield Applications Received	RF304-13192 THRU RF304-13207
7/6/92	Amos Frank Super 100-Station	RF342-245
7/6/92	Dan's Super 100	RF342-246
7/6/92	Mel's Clark 100	RF342-247
7/6/92	Jim's Super 100	RF342-248
7/6/92	Stewart's Clark Super 100	RF342-249
7/7/92	Darrell's Clark Oil	RF342-250
7/7/92	Jim's Super 100 Clark	RF342-251
7/9/92	West Side Plaza Car Wash	RF315-10216
7/9/92	Consumers Power Co.	RF345-2
7/9/92	Terry Piazza's	RF342-252
7/9/92	Welsh Oil, Inc.	RF342-253
7/10/92	Wallace Oil Reclaiming Co.	RF340-173

[FR Doc. 92-17559 Filed 7-23-92; 8:45 am]

BILLING CODE 6450-01-M

Office of Hearings and Appeals

Proposed Refund Procedures

AGENCY: Office of Hearings and Appeals, Department of Energy.

ACTION: Notice of proposed implementation of special refund procedures.

SUMMARY: The Office of Hearings and Appeals (OHA) of the Department of Energy (DOE) announces the proposed procedures for the disbursement of $288,327, plus accrued interest, obtained by the DOE pursuant to a Consent Judgment In Action for Restitution and Civil Penalties between the United States and Crescent Refining & Oil Company and Petroleum Fuel Company. The OHA has tentatively determined that the funds will be distributed in accordance with the DOE's special refund procedures, 10 CFR part 205, subpart V.

DATE AND ADDRESS: Comments must be filed in duplicate by August 24, 1992 and should be addressed to the Office of Hearings and Appeals, Department of Energy, 1000 Independence Avenue, SW., Washington, DC 20585. All comments should display a reference to case number LEF-0044.

FOR FURTHER INFORMATION CONTACT: Thomas L. Wieker, Deputy Director, Office of Hearings and Appeals, 1000 Independence Ave., SW., Washington, DC 20585, (202) 586-2390.

SUPPLEMENTARY INFORMATION: In accordance with § 205.282(b) of the procedural regulations of the Department of Energy (DOE), 10 CFR

205.282(b), notice is hereby given of the issuance of the Proposed Decision and Order set out below. The Proposed Decision and Order sets forth the procedures that the DOE has tentatively formulated to distribute $288,327 that has been remitted by Crescent Refining & Oil Company and Petroleum Fuel Company to the DOE to settle possible pricing violations with respect to their sales of No. 2-D diesel fuel, PS 200 fuel oil, PS 300 fuel oil, PS 400 fuel oil and bunker fuel during the period September 1, 1973 through October 31, 1975. The DOE is currently holding the funds in an interest bearing account pending distribution.

Applications for refund should not be filed at this time. Appropriate public notice will be given when the submission of claims is authorized. Any member of the public may submit written comments regarding the proposed refund procedures. Commenting parties are requested to submit two copies of their comments. Comments should be submitted within 30 days of the publication in the **Federal Register**, and should be sent to the address set forth at the beginning of this notice. All comments received will be available for public inspection between the hours of 1 p.m. through 5 p.m., Monday through Friday, except federal holidays, in the Public Reference Room of the Office of Hearings and Appeals, located in room 1E-234, 1000 Independence Avenue, SW., Washington, DC 20585.

Dated: July 20, 1992.

George B. Breznay,

Director, Office of Hearings and Appeals.

Proposed Decision and Order

Implementation of Special Refund Procedures

July 20, 1992.

Name of Firm: Crescent Refining & Oil Company; Petroleum Fuel Company

Date of Filing: April 17, 1992

Case Number: LEF-0044

On April 17, 1992, the Economic Regulatory Administration (ERA) of the Department of Energy (DOE) filed a petition with the Office of Hearings and Appeals (OHA), requesting that the OHA formulate and implement procedures for distributing funds obtained through the settlement of enforcement proceedings involving Crescent Refining & Oil Company (Crescent) and Petroleum Fuel Company (PFC) pursuant to 10 CFR part 205, subpart V. This Proposed Decision sets forth the OHA's tentative plan for distributing these funds to qualified refund applicants. Since the procedures set forth in this Decision are in proposed form, no refund application should be filed at this time. A final determination will be issued at a later date announcing that the filing of Crescent and PFC refund applications is authorized.

I. Background

Crescent and PFC were reseller-retailers as defined by 10 CFR 212.31 and were subject to the DOE Mandatory Petroleum Price Regulations. On the basis of an extensive audit of the firms' pricing practices, the ERA determined that during the period September 1, 1973, through October 31, 1975 (the Consent Order period), Crescent and PFC overcharged specific customers in certain sales of No. 2-D diesel fuel, PS 200 fuel oil, PS 300 fuel oil, PS 400 fuel oil and bunker fuel. On September 28, 1979, the ERA issued a Proposed Remedial Order (PRO) to Crescent and PFC. Crescent and PFC were owned by the same individuals and were treated as a single firm for purposes of the PRO. Therefore, we will hereinafter refer to the firms collectively as Crescent. On February 21, 1980, Crescent filed its Statement of Objections to the PRO. The OHA issued a Remedial Order (RO) on April 27, 1981 which found that Crescent had overcharged those customers as alleged in the PRO during the period from September 1, 1973, through October 31, 1975. Crescent Refining & Oil Co., 8 DOE ¶ 83,003 (1981). Crescent appealed the RO to the Federal Energy Regulatory Commission (FERC). On December 21, 1983, the FERC's Presiding Officer, Richard Howe, Jr., issued a Proposed Order (PO) that affirmed the RO in all respects. Crescent Refining and Oil Co., 25 FERC ¶ 62,404 (1983). On March 23, 1984, FERC issued an Order adopting the PO. Crescent Refining and Oil Co., 26 FERC ¶ 61,377 (1984). On November 5, 1990, the United States of America filed for damages and summary enforcement of the RO in the United States District Court for the Central District of California. In order to settle the matter, the United States and Crescent entered into a Consent Judgement In Action for Restitution and Civil Penalties (Consent Judgement) which was approved by the Court on September 18, 1991. The Consent Judgement stipulated that Crescent remit a total of $350,000 over a period of seven years to the United States. However, pursuant to a settlement between the DOE and Crescent approved by the Court on December 27, 1981, the DOE received $288,327 from Crescent as a Receipt and Full Satisfaction of Judgement.

This Proposed Decision and Order concerns the distribution of the $288,327, plus interest accrued on this amount in escrow, that Crescent remitted to the DOE for direct restitution to the identified customers found by the RO to have been overcharged. The RO found that Crescent overcharged a number of its customers on certain sales of No. 2-D diesel fuel, PS 200 fuel oil, PS 300 fuel oil, PS 400 fuel oil, and bunker fuel. We will hereinafter refer to those products as covered products. The Appendix attached to this Proposed Decision is based on information contained in the PRO. The Appendix sets forth the covered products, the names of the Crescent customers who were overcharged on each particular product, and the amount that each customer was allegedly overcharged by Crescent. Accordingly, the potential refund claimants in this proceeding are the customers listed in the Appendix of this Proposed Decision.

II. Proposed Refund Procedures

As indicated above, the Crescent customers listed in the Appendix of this Proposed Decision constitute the set of potential refund claimants. Therefore, we propose to consider refund applications only from these customers, including the successor in interest of any customer. Because the Consent Judgement funds are substantially less than the amount of the violations found by the RO, it is necessary to recalculate each purchaser's potential refund amount. We therefore have calculated the fraction of the alleged overcharge represented by the Consent Judgement funds. We have then multiplied that fraction (.562400959) by the amount of alleged overcharge specified in the RO for each customer to yield the maximum amount that each customer is entitled to receive.[1] These amounts are listed as the Pro-Rata Share next to each potential claimant's name in the Appendix to this Proposed Decision. We recognize that any eligible firm could have been overcharged in amounts greater than the alleged RO overcharges listed in the appendix of this Proposed Decision. However, unless an applicant is able to demonstrate, with respect to specific transactions covered by the RO, that the amount listed is not reflective of the overcharges that it sustained, we will conclude that an applicant should not be eligible to receive a refund in an amount greater than its pro-rata share of the Consent Judgement funds as calculated from the violation amounts found by the RO.

A. Requirements for Refund Claimants

We propose that in order to receive a refund, an applicant generally must demonstrate through the submission of detailed evidence that it did not pass on the alleged overcharges to its customers. See, *e.g.*, Office of Enforcement, 8 DOE ¶ 82,597 at 85,396-97 (1981). However, as we have done in many prior refund cases, we propose to adopt specific injury presumptions that will simplify and streamline the refund process for some categories of customers: small

[1] The PRO and RO found that Crescent committee violations in the amount of $514,454.03. However, our review of the individual violations listed in the exhibits to the PRO reveals that two errors were made in the calculation of the violation amount for the PS 200 customers. As an initial matter, we have determined that the individual overcharges listed in the PRO for PS 200 Class 4 customers total only $20,339.13 rather than the $22,126.56 listed. The difference between the actual and listed total violation for the PS 200 Class 4 customers is therefore $1,787.43. In addition, a separate error was made in calculating the total violation amount for all cases of PS 200 customers, which resulted in the PRO's total violation amount for all classes of purchasers of PS 200 ($151,100.20) being understated by $5.00. The actual violation amount, using the erroneous figure for class 4 customers, should have been $151,105.20 and the total erroneous violation amount for all products and classes of customers should have been $514,459.03 rather than $154,454.03. Accordingly, the actual violation amount, as derived by a tally of all the individual violations listed in the exhibits to the PRO, equals $512,671.60[($514,454.03+$5.00)−$1,787.43=$512,671.60]. Accordingly, we will calculate the customers' pro-rata shares based upon a total violation amount of $512,671.60.

claims, end-users, and regulated firms and cooperatives. These presumptions will excuse members of certain applicant categories from proving that they were injured by Crescent's alleged overcharges, and are discussed below.

1. Reseller Applicants Seeking Refunds of $5,000 or Less

We proposed to adopt a presumption, as we have in many previous cases, that reseller seeking small refunds were injured by Crescent's pricing practices. *See, e.g., E.D.G., Inc.*, 17 DOE ¶85,679 (1988).[2] We recognize that the cost to the applicant of gathering evidence of injury to support a small refund claim could exceed the expected refund. Consequently, without simplified procedures, some injured parties would be denied an opportunity to obtain a refund. Under the small-claims presumption, a claimant who claims a refund of $5,000 or less will not be required to submit any evidence of injury beyond establishing that it is one of the eligible customers that purchased the covered products listed in the Appendix. We propose that a reseller applicant must follow the procedures that are outlined below if the applicant is seeking a refund in excess of $5,000, plus interest accrued on that amount while in escrow.

2. Reseller Applicants Seeking larger Refunds

We propose that if a reseller claims an amount in excess of $5,000, it will be required to provide a detailed demonstration of its injury. We propose that it will be required to demonstrate that it maintained a "bank" of unrecovered product costs in order to show that it did not pass along the alleged overcharges to its own customers. In addition, we propose that a claimant must show that market conditions would not permit it to pass through those increased costs. *See, e.g., Quintana Energy Corp.*, 21 DOE ¶85,032 at 88,117 (1991). If a reseller that is eligible for a refund in excess of $5,000 elects not to submit the cost bank and purchase price information described above, it may still apply for a small claims refund of $5,000 plus accrued interest from the escrow fund.

3. End-users

We propose to adopt a presumption that end-users or ultimate consumers whose businesses are unrelated to the petroleum industry were injured by Crescent's alleged overcharges, and are entitled to their full share of the settlement monies obtained from Crescent. Unlike regulated firms in the petroleum industry end-users were not subject to price control during the Consent Judgement period. Moreover, these unregulated firms were not required to keep records that justified selling price increases by reference to cost increases. Therefore, an analysis of the impact of the alleged overcharges on the final prices of non-petroleum goods and services would be beyond the scope of a special refund proceeding. *See, e.g., American Pacific International, Inc.*, 14 DOE ¶85,158 at 88,294 (1986). We propose, therefore, that any applicant claiming to be an end-user, must establish that it is one of the Crescent customers listed in the Appendix or a successor thereto and that the nature of its business made it an ultimate consumer of the Crescent covered products listed for it in the Appendix. If an applicant establishes those two facts, it will receive its full pro-rata share as its refund without making a detailed demonstration of injury.

4. Regulated Firms and Cooperatives

We propose that regulated firms (such as public utilities) and agricultural cooperatives, which are required to pass on to their customers the benefit of any refund received, will be exempted from the requirement that they make a detailed showing of injury. *Marathon Petroleum Co.*, 14 DOE ¶ 85,269 at 88,515 (1986); see also *Office of Special Counsel*, 9 DOE ¶ 82,538 at 85,203 (1982). We will require a regulated firm or cooperative to establish that it is one of the Crescent customers listed in the Appendix or a successor, thereto. In addition, we will require each such claimant to certify that it will pass any refund received through to its customers, to provide us with a full explanation of the manner in which it plans to accomplish this restitution to its customers and to notify the appropriate regulatory or membership body of the receipt of the refund money. If a regulated firm or cooperative meets these requirements, it will receive a refund equal to its full pro-rata share. However, any public utility claiming a refund of $5,000 or less will not be required to submit the above referenced certifications and explanation. A cooperative's sales of covered product to non-members will be treated in the same manner as sales by other resellers under Section A (2) above.

B. Distribution of the Remainder of the Crescent Consent Judgement Funds

In the event that money remains after all refund claims from the Crescent fund have been analyzed, those funds in that account will be disbursed as indirect restitution in accordance with the provisions of the Petroleum Overcharge Distribution and Restitution Act of 1986 (PODRA), 15 U.S.C. 4501–4507 (1988). Pursuant to the PODRA, the funds will be distributed to state governments for use in energy conservation programs.

III. Conclusion

Applications for Refund should not be filed at this time. Detailed procedures for filing Applications for Refund will be provided in a final Decision and Order. Before distributing any portion of the Consent Judgment fund, we will publicize the distribution process, and provide an opportunity for any potential claimants to file a claim. Comments regarding the tentative distribution process set forth in this Proposed Order should be filed with the Office of Hearings and Appeals within 30 days of the publication of this Proposed Order in the **Federal Register.**

It is Therefore Ordered That:

The refund amount remitted to the Department of Energy by Crescent Refining & Oil Company and Petroleum Fuel Company, pursuant to the Consent Judgment approved on September 18, 1990, will be distributed in accordance with the foregoing decision.

[2] Exhibit L of the PRO indicates that the customers classified as resellers wee overcharged a total of $17,503.91 on purchases of No. 2–D diesel fuel. The remainder of the overcharges went to purchasers classified as end-users by the PRO. By the process of elimination, the OHA has determined that the reseller customers were Verne's Truck Center, LODS Furniture Freight, and Bandini Truck Terminal.

APPENDIX

Product/customer type	Name	Alleged overcharge	Pro-rata share
PS 300	American Cement	$245.24	$137.92
PS 300	American Pipe	73.38	41.27
PS 300	Holly Sugar	38,056.92	21,403.25
PS 300	Riverside Cement	717.51	403.53
PS 300	City of Pasadena	111,812.21	62,883.29
PS 300	City of Burbank	52,351.25	29,442.39
Diesel fuel	Active Trucking	5,554.15	3,123.66
Diesel fuel	American Pacific	51.48	28.95
Diesel fuel	Bandini Truck Service	940.95	529.19
Diesel fuel	Fitzgerald Bros. Truck Service	4,330.30	2,435.36
Diesel fuel	U.S. Army Fort MacArthur	1,128.60	634.73
Diesel fuel	Keeney Truck Tires	780.80	439.12
Diesel fuel	Lods Furniture Freight	322.00	181.09
Diesel fuel	NAS	40.00	22.50
Diesel fuel	Verne's Truck Center	16,240.96	9,133.93
Bunker	Refining Associates, Inc.	30,383.13	17,087.50

APPENDIX—Continued

Product/customer type	Name	Alleged overcharge	Pro-rata share
PS 400	American Cement	40,630.15	22,850.44
PS 400	Imperial Irrigation	59,694.80	33,572.41
PS 200 Class 1	City of Los Angeles	19,044.45	10,710.62
PS 200 Class 1	Naval Air Station Los Alamitos	2,237.05	1,258.12
PS 200 Class 2	Alhambra City Schools	4,567.77	2,568.92
PS 200 Class 2	City of Glendale	783.49	440.64
PS 200 Class 2	Los Angeles City Schools	24,035.41	13,517.54
PS 200 Class 2	Pacific Telephone, Orange	236.54	133.03
PS 200 Class 2	Pasadena City School	18,096.98	10,177.76
PS 200 Class 13	Gaylord Hotel	91.38	51.39
PS 200 Class 13	Kleen Towel	67.34	37.87
PS 200 Class 13	Little Sister of the Poor	81.00	45.55
PS 200 Class 13	Reliable Grease	353.80	198.98
PS 200 Class 13	Soft Water Laundry	128.00	71.99
PS 200 Class 13	Southern Serv. Pamona	276.04	155.25
PS 200 Class 14	Ansco Steel Co.	180.00	101.23
PS 200 Class 14	Bank of America	63.67	35.81
PS 200 Class 14	California Piece D. Works	70.00	39.37
PS 200 Class 14	California Hosp. Medical Center	238.63	134.21
PS 200 Class 14	CBS TV	108.80	61.19
PS 200 Class 14	F.C. Braun & Co.	202.50	113.89
PS 200 Class 14	Charles Duhn Co.	59.40	33.41
PS 200 Class 14	Compton Forge	886.50	498.57
PS 200 Class 14	Dart Industries	47.00	26.43
PS 200 Class 14	Earle Jorgensen	599.20	336.99
PS 200 Class 14	Furo Corp.	46.35	26.07
PS 200 Class 14	U.S. Army Fort MacArthur	686.00	385.81
PS 200 Class 14	Geltman Industries	104.70	58.88
PS 200 Class 14	Inmont Corp.	19.43	10.93
PS 200 Class 14	Los Angeles Paper Box	247.00	138.91
PS 200 Class 14	Los Angeles Times	87.00	48.93
PS 200 Class 14	M&H Investment	23.06	12.97
PS 200 Class 14	National Tank	9.00	5.06
PS 200 Class 14	Naval Supply Center Long Beach	2,968.83	1,669.67
PS 200 Class 14	Peterson Mfg. Co.	63.00	35.43
PS 200 Class 14	Renta Uniform	45.90	25.81
PS 200 Class 4	Signal Insurance	483.00	271.64
PS 200 Class 4	Standard Mat Co.	212.53	119.53
PS 200 Class 4	University of Southern Cal	2,844.69	1,599.86
PS 200 Class 4	Western Brass Works	3,117.15	1,753.09
PS 200 Class 4	Western Wire & Cable	155.47	87.44
PS 200 Class 5	Mt. St. Mary's College	14,456.52	8,130.36
PS 200 Class 6	Cargill, Inc.	585.23	329.13
PS 200 Class 6	Chapman Bldg.	1,141.27	641.85
PS 200 Class 6	Charles Chapman	556.33	312.86
PS 200 Class 6	Hollywood Bldg.	1.50	0.84
PS 200 Class 6	Hollywood Cemetery	173.32	97.46
PS 200 Class 6	Hollywood Penehouse	34.28	19.28
PS 200 Class 6	9th & Broadway	1,078.81	606.72
PS 200 Class 6	Saint Monica School	328.51	184.75
PS 200 Class 6	Stanley Apartments	642.95	361.60
PS 200 Class 6	U.S. Borax	117.72	66.21
PS 200 Class 6	Veterans Hospital, Westwood	115.11	64.74
PS 200 Class 7	Guy Webster	55.10	30.99
PS 200 Class 7	Pacific Mutual Life Ins. Co.	138.00	77.61
PS 200 Class 7	Rockwell International	698.06	392.59
PS 200 Class 7	Tompkin-Towel	47.63	26.79
PS 200 Class 8	Southern California Edison	4,098.53	2,305.02
PS 200 Class 9	Arthur C. Withson	1,694.30	952.88
PS 200 Class 10	California Non-Metallics	16.67	9.38
PS 200 Class 11	Huntington Beach H.S.	423.50	238.18
PS 200 Class 12	Movie Lab Hollywood	225.60	126.88
PS 200 Class 12	St. Vincent's Hospital	160.24	90.12
PS 200 Class 3	Consolidated Hotel of Cal.	362.25	203.73
PS 200 Class 3	Falcon Foam Plastics	229.23	128.92
PS 200 Class 3	Occidental College	540.12	303.76
PS 200 Class 3	Southern Service, Ontario	16.20	9.11
PS 200 Class 3	Vincent Creco	82.80	46.57
PS 200 Class 4	Alexandria Hotel	258.81	145.55
PS 200 Class 4	Alex Foods	395.00	222.15
PS 200 Class 4	Allied Properties	193.71	108.94
PS 200 Class 4	Andrew Jergens	1,209.46	680.17
PS 200 Class 4	California Hospital	259.24	145.80
PS 200 Class 4	Chapel Brass Co.	22.22	12.50
PS 200 Class 4	Chapel of the Pines	1,175.52	661.11
PS 200 Class 4	Chef's Linen	194.83	109.57
PS 200 Class 4	First Western Bank Bldg.	66.00	37.12
PS 200 Class 4	General Felt	58.80	33.07
PS 200 Class 4	Good Samaritan Hospital	894.35	502.96

APPENDIX—Continued

Product/customer type	Name	Alleged overcharge	Pro-rata share
PS 200 Class 4	Great Western Malt	2,332.72	1,311.92
PS 200 Class 4	Intra-Cal Properties	708.06	398.21
PS 200 Class 4	Los Angeles Community Coll.	170.78	96.05
PS 200 Class 4	National Sponge	233.21	131.16
PS 200 Class 4	N.L. Industries	579.25	325.77
PS 200 Class 4	Pasadena City College	1,986.11	1,116.99
PS 200 Class 4	Prudential Insurance, LA	611.23	343.76
PS 200 Class 4	Queen of the Angels Hospital	657.80	369.95
PS 200 Class 4	Santa Monica Hospital	1,119.48	629.60
PS 200 Class 4	Saint Francis Hospital	345.98	194.58
PS 200 Class 4	Sheraton West	53.79	30.25
PS 200 Class 14	State Farm	132.00	74.24
PS 200 Class 14	Steel Casting Co.	203.00	114.17
PS 200 Class 14	Thompson Industries	162.00	91.11
PS 200 Class 15	Los Angeles Asphalt	1,709.86	961.63
PS 200 Class 15	Los Angeles Griffith Park	597.21	335.87
PS 200 Class 16	Southern Service, Glendale	80.50	45.27
PS 200 Class 16	Southern Service, Long Beach	84.00	47.24
PS 200 Class 17	Ball Corp.	2,998.51	1,680.74
PS 200 Class 17	Braun Towel & Linen	316.93	178.24
PS 200 Class 17	Cal Tech	933.76	525.15
PS 200 Class 17	Crown City Plating	628.00	353.19
PS 200 Class 17	Fibreboard Corp.	380.00	213.71
PS 200 Class 17	Filtrol Corp.	2,079.00	1,169.23
PS 200 Class 17	Owens-Illinois	997.87	561.20
PS 200 Class 17	National Linen	1,584.72	891.25
PS 200 Class 17	Northrup	1,092.39	614.36
PS 200 Class 17	Soule Steel Co.	1,836.50	1,032.85
PS 200 Class 17	Stauffer Chemical	8,397.39	4,772.70
		$512,671.60	$288,327.00

[FR Doc. 92-17560 Filed 7-23-92; 8:45 am]
BILLING CODE 6450-01-M

ENVIRONMENTAL PROTECTION AGENCY

[ER-FRL-4158-1]

Environmental Impact Statements and Regulations; Availability of EPA Comments

Availability of EPA comments prepared July 6, 1992 through July 10, 1992 pursuant to the Environmental Review Process (ERP), under section 309 of the Clean Air Act and section 102(2)(c) of the National Environmental Policy Act as amended. Requests for copies of EPA comments can be directed to the Office of Federal Activities at (202) 260-5076.

An explanation of the ratings assigned to draft environmental impact statements (EISs) was published in FR dated April 10, 1992 (57 FR 12499).

Draft EISs

ERP No. D-BPA-L08048-00 Rating LO, Resource Programs to Acquire Sufficient New Resources to meet Potential Electric Power Requirements, Implementation, WA, ID, OR, MT, CA, WY, NV, UT, NM, AZ, and British Columbia.

Summary: EPA had no objections to the draft EIS.

ERP No. D-FAA-J51011-UT Rating EC2, Salt Lake City International Airport Expansion, Construction and Operation, Air Carrier Runway 16R/34L, Plan Approval, Funding and section 404 Permit Issuance, Salt Lake City, Salt Lake County, UT.

Summary: EPA Expressed concerns regarding the uncertainty of success of the proposed wetland mitigation plan and seeks additional information in the final EIS.

ERP No. D-FHW-F40223-MN Rating EC2, I-494 Reconstruction Corridor Study, I-394 on the west to the Minnesota River, Funding and Section 404 Permit, Hennepin County, MN.

Summary: EPA requested additional information regarding light rail transit as an alternative, wetland mitigation sites and acreage and maintenance of detention ponds.

ERP No. D-FHW-F40321-MI Rating EU2, US 23 Improvements, MI-13 to MI-65 and segments of Standish and Omer Cities, Funding, section 404 Permit and NPDES Permit, Arenac County, MI.

Summary: EPA found that the Southern Bypass Alternative results in impacts to high quality wetlands which are environmentally unsatisfactory. EPA requested additional information to assess the impacts of the Standish Bypass modification using City Limits Road.

ERP No. D-IBR-K50009-CA Rating EC2, American River Bridge Crossing Project, Construction and Roadway Improvement, Funding, Right-of-Way Approval, Coast Guard Bridge Permit and section 404 Permit, City of Folsom, Sacramento County, CA.

Summary: EPA recommended that the final EIS discuss the use of automobile demand reduction measures to help avoid impacts.

ERP No. DS-AFS-J65167-MT Rating LO, Lost Silver Timber Harvest Project, Timber Sale and Road Construction, Additional Information, Implementation, Flathead National Forest, Hungry Horse Ranger District, Flathead County, MT.

Summary: EPA expressed and requested the use of best management practices to reduce impacts.

ERP No. DS-FAA-F51039-MN Rating EC2, Minneapolis-St. Paul International Airport, Runway 4-22 Extension, Additional Information, Funding, Wold-Chamberlain Field, Hennepin County, MN.

Summary: EPA expressed concern for proposed alternative 1A, since alternative 1B would result in reduced noise impacts. EPA requested additional noise analysis and a commitment to specific noise mitigation.

ERP No. D1-AFS-J65143-00 Rating EO2, Manti-La Sal National Forest Oil and Gas Leasing, Implementation, Sanpete, Utah, Sevier, Juab, Emery, Carbon, Grand and San Juan Counties, UT and Mesa and Montrose Counties, CO.

Summary: EPA believed that the EIS did not contain adequate baseline data to assess the nature of resources being impacted, fully assess environmental impacts or provide necessary mitigation measures to minimize impacts. EPA has requested a meeting to help resolve the issues.

Final EISs

ERP No. F-AFS-J02020-CO, HD Mountains Coalbed Methane Gas Field Development Project, Construction and Operation, Approval, Federal Antiquities Permit, Drill Deepen or Plug Back Permit and section 404 Permit, San Juan National, Forest Pine District, Archuleta and LaPlata Counties, Co.

Summary: EPA expressed concerns regarding long term cumulative air quality impacts. EPA believes that a multiple agency inventory and increment consumption tracking in the Four Corners Region may help resolve this issue.

ERP No. F-COE-E50006-NC, Hobucken Bridge Replacement, Atlantic Intracoastal Waterway Bridge (AIWW), Implementation, Pamlico County, NC.

Summary: EPA's comments/concerns raised in the draft EIS were satisfactorily addressed.

ERP No. F-FAA-F51040-IN, Indianapolis International Airport Master Plan Development, Construction and Operation, Runway 5L/23R Parallel to existing Runway 14/32 and connecting to Runways 5R/23L and 5L/23R, Airport Layout Plan Approval, Funding and section 404 Permit, Marion County, IN.

Summary: EPA's previously expressed concerns for surface water quality, air quality and ambient noise level impacts have been satisfactorily addressed. We continue to be concerned that the matter relating to provision of satisfactory wetlands compensation has still not been fully resolved.

ERP No. F-FHW-F40306-WI, Wisconsin Trunk Highway 29 Improvement, Shawano Bypass Construction, section 404 Permit and Funding Shawano County, WI.

Summary: EPA's previously expressed concerns for the project's potential adverse impact on surface water quality have been satisfactorily addressed. EPA continues to have environmental concerns for avoidance, minimization and compensation of wetlands impact. EPA continues to have environmental concerns that the project's noise sensitive receptors will not be mitigated.

ERP No. F-FHW-J40123-MT, I-15/North Helena Valley Interchange Improvements, I-15 to Montana Avenue, Construction, Funding, Lewis and Clark County, MT.

Summary: EPA had no objection to the preferred alternative which will have the least impact on local air quality.

ERP No. F-NPS-F61011-MN, Voyageurs National Park, Wilderness Recommendations, Designation and Nondesignation, St. Louis and Koochiching Counties, MN.

Summary: EPA expressed objection to the proposed action due to likely impacts to the gray wolf and vegetation loss.

ERP No. FS-FHW-A41880-NY, Elmira North-South Arterial Construction, South Section, NY-14/328 to Clements Center Parkway at Pennsylvania Avenue, Updated Information, Funding, City of Elmira and Town of Southport, Chemung County, NY.

Summary: EPA does not believe that this project will cause significant adverse environmental impacts.

Dated: July 21, 1992.

William D. Dickerson,

Deputy Director, Office of Federal Activities.

[FR Doc. 92-17562 Filed 7-23-92; 8:45 am]

BILLING CODE 6560-50-M

[ER-FRL-4157-9]

Environmental Impact Statements; Availability

RESPONSIBLE AGENCY: Office of Federal Activities, General Information (202) 260-5076 or (202) 260-5075.

ACTION: Availability of Environmental Impact Statements Filed July 13, 1992 Through July 17, 1992 Pursuant to 40 CFR 1506.9.

EIS No. 920277, Final EIS, COE, FL, Central and Southern Florida Project, Flood Control and Canal 51-West End Control Structures 155A, 360, Pump station 319 and Levee Construction, Implementation, Palm Beach County, FL, Due: August 24, 1992, Contact: A.J. Salem (904) 791-1690.

EIS No. 920278, Draft EIS, GSA, MN, Minneapolis Federal Building and U.S. Courthouse Improvement and Expansion or New Construction, Implementation, Hennepin County, MN, Due: August 31, 1992, Contact: Maureen Pudlowski (312) 353-0765.

EIS No. 920279, Draft EIS, FHW, NC, US 23/I-26 Corridor Transportation Improvements, NC-197/Barnardville Road to North Carolina-Tennessee State Line, Funding, COE section 404 Permit and EPA National Pollutant Discharge Elimination System Permit, Buncombe and Madison Counties, NC, Due: September 08, 1992, Contact: Nicholas L. Graf (919) 856-4346.

EIS No. 920280, Draft Supplement, COE, FL, Palm Beach County Beach Erosion Control Project, Protective Beach Construction along the Mid-Town Segment, Implementation, Palm Beach County, FL, Due: September 08, 1992, Contact: A.J. Salem (904) 791-1690.

EIS No. 920281, Draft EIS, AFS, CA, Running Springs Water District Wastewater Treatment Facilities Upgrading and Reclamation for Irrigation and Snow-Making at the Snow Valley Ski Resort, Approval, San Bernardino National Forest, San Bernardino County, CA, Due: September 08, 1992, Contact: Tracy Kremer (714) 337-2444.

EIS No. 920282, Draft EIS, GSA, IL, Hammond Federal Building and U.S. Courthouse Construction and Site Selection, Implementation, Lake County, IL, Due: September 14, 1992, Contact: Barbara Reed (312) 353-5610.

EIS No. 920283, Draft EIS, AFS, OR, Buzzard Project Area Timber Sale and Road Construction, Implementation, Umatilla National Forest, Walla Walla Ranger District, Union and Wallowa Counties, OR, Due: September 08, 1992, Contact: Tom Reilly (509) 522-6290.

EIS No. 920284, Draft EIS, FHW, OK, OK-82 Highway Construction, Red Oak to Lequire, Funding and Possible National Pollutant Discharge Elimination System Permit, Latimore and Haskell Counties, OK, Due: September 08, 1992, Contact: Gary E. Larsen (405) 231-4724.

EIS No. 920285, Final Supplement, COE, IA, Perry Creek Flood Control Project, Construction of Channelization and Conduit Systems, Implementation, Sioux City, Woodbury County, IA, Due: August 24, 1992, Contact: Richard Gorton (402) 221-4598.

EIS No. 920286, final EIS, BLM, WA, Spokane District Resource Management Plan Amendment (RMP), Fluid Mineral Leasing, Approval, Yakima River Canyon and Upper Crab Creek Management Areas, several Counties, WA, Due: September 08, 1992, Contact: Joseph Buesing (509) 353-2570.

EIS No. 920287, Draft EIS, UAF, AR, Eaker Air Force Base Disposal and Reuse, Implementation, Mississippi

County, AR, Due: September 08, 1992, Contact: Lt. Col. Gary Baumgartel (512) 536-3869.

EIS No. 920288, Draft EIS, FHW, CA, CA-180 Freeway and Expressway Construction, Chestnut Avenue to Highland Avenue, Funding and Possible COE Section 404 Permit, Fresno County, CA, Due: September 11, 1992, Contact: Leonard E. Brown (916) 551-1307.

EIS No. 920289, Final Supplement, AFS, MT, Lost Silver Timber Harvest Project, Timber Sale and Road Construction, Additional Information, Flathead National Forest, Hungry Horse Ranger District, Flathead County, MT, Due: August 24, 1992, Contact: Allen Christophersen (506) 387-5243.

EIS No. 920290, Draft EIS, USA, LA, England Air Force Base Disposal and Reuse, Implementation, Rapides Parish, LA, Due: September 08, 1992, contact: Lt. Col. Gary Baumgartel (512) 536-3869.

EIS No. 920291, Final EIS, EPA, MA, Massachusetts Bay Ocean Dredged Material Disposal Site, Designation, MA, Due: August 24, 1992, Contact: Kymberlee Keckler (617) 565-4432.

EIS No. 920292, Draft EIS, ICC, MT, Tongue River Railroad Additional Rail Line Construction and Operation, Ashland to Decker, Approval, Rosebud and Big Horn Counties, MT, Due: September 21, 1992, Contact: Elaine K. Kaiser (202) 927-6248.

Dated: July 21, 1992.

William D. Dickerson,

Deputy Director, Office of Federal Activities.

[FR Doc. 92-17561 Filed 7-23-92; 8:45 am]

BILLING CODE 6560-50-M

[FRL-4156-4]

Privacy Act of 1974; System of Records

AGENCY: Environmental Protection Agency.

ACTION: Amendment to notice of Privacy Act system of records.

SUMMARY: The Environmental Protection Agency (EPA) proposes to amend an existing Privacy Act system of records, the "Freedom of Information Act Request File," which was last published on January 25, 1978 (43 FR 3502).

DATES: The proposed action will be effective without further notice August 24, 1992, unless comments are received which would require a contrary determination.

ADDRESSES: Send written comments to the Agency Freedom of Information Officer (A-101), U.S. Environmental Protection Agency, 401 M Street SW., Washington, DC. 20460.

FOR FURTHER INFORMATION CONTACT: Jeralene B. Green, Freedom of Information Office (A-101), U.S. Environmental Protection Agency, 401 M Street SW., Washington, DC. 20460, Telephone (202) 260-4048.

SUPPLEMENTARY INFORMATION: The proposed amendment deletes from the Routine Use section of the notice the current general statement of the primary uses of records in the system and adds 4 specific routine uses which are compatible with the purpose for which the records were collected. This amendment is being published to more accurately describe and reflect current and proposed uses of records in the system. The proposed amendment does not require a report on new or altered systems of records pursuant to 5 U.S.C. 552a(r). The amended system of records will read as follows:

EPA-9

SYSTEM NAME:

Freedom of Information Act Request File.

* * * * *

ROUTINE USES OF RECORDS MAINTAINED IN THE SYSTEM; INCLUDING CATEGORIES OF USERS AND THE PURPOSES OF SUCH USES:

Information in this system of records may be disclosed:

1. To EPA contractors and grantees and to volunteers who have been engaged to perform work or services for EPA under a contract, grant, cooperative agreement or other arrangement and who need to have access to the records in order to perform their tasks. Recipients of records under this routine use will be required to maintain the records in accordance with the provisions of the Privacy Act.

2. To the Department of Justice and to Congress in connection with reports required to be submitted under 5 U.S.C. 552a(e).

3. To another Federal Agency with an interest in the record in connection with a referral of a Freedom of Information Act (FOIA) request to that agency for its views or decision on whether the record should be disclosed pursuant to the FOIA.

4. To a Federal Agency in order to obtain advice and recommendations concerning matters on which that agency has specialized experience or particular competence that may be useful to EPA in making required determinations under the FOIA.

* * * * *

Dated: July 15, 1992.

Christian R. Holmes,

Assistant Administrator for Administration and Resources Management.

[FR Doc. 92-17142 Filed 7-23-92; 8:45 am]

BILLING CODE 6560-50-M

[OPPTS-59946; FRL 4081-3]

Certain Chemicals; Premanufacture Notices

AGENCY: Environmental Protection Agency (EPA).

ACTION: Notice.

SUMMARY: Section 5(a)(1) of the Toxic Substances Control Act (TSCA) requires any person who intends to manufacture or import a new chemical substance to submit a premanufacture notice (PMN) to EPA at least 90 days before manufacture or import commences. Statutory requirements for section 5(a)(1) premanufacture notices are discussed in the final rule published in the **Federal Register** of May 13, 1983 (48 FR 21722). In the **Federal Register** of November 11, 1984, (49 FR 46066) (40 CFR 723.250), EPA published a rule which granted a limited exemption from certain PMN requirements for certain types of polymers. Notices for such polymers are reviewed by EPA within 21 days of receipt. This notice announces receipt of 2 such PMN(s) and provides a summary of each.

DATES: Close of review periods:

Y 92-162, August 2, 1992.

Y 92-163, August 3, 1992.

FOR FURTHER INFORMATION CONTACT: Susan B. Hazen, Director, Environmental Assistance Division (TS-799), Office of Pollution Prevention and Toxics, Environmental Protection Agency, Rm. E-545, 401 M St., SW., Washington, DC, 20460, (202) 554-1404, TDD (202) 554-0551.

SUPPLEMENTARY INFORMATION: The following notice contains information extracted from the nonconfidential version of the submission provided by the manufacturer on the PMNs received by EPA. The complete nonconfidential document is available in the TSCA Public Docket Office, NE-G004 at the above address between 8 a.m. and noon and 1 p.m. and 4 p.m., Monday through Friday, excluding legal holidays.

Y 92-162

Manufacturer. P.D. George Company.

Chemical. (S) C_{16}-C_{18} and C_{18} unsaturated fatty acids; theic; trimethylolethane; isophthalic acid.

Use/Production. (S) Insulating varnish for coating electrical equipment. Prod. range: 7,000 kg/yr.

Y 92-163

Manufacturer. Reichhold Chemicals, Inc.

Chemical. (G) Polyester resin.

Use/Production. (S) Powder coating. Prod. range: Confidential.

Dated: July 21, 1992.

Steven Newburg-Rinn,

Acting Director, Information Management Division, Office of Pollution Prevention and Toxics.

[FR Doc. 92-17551 Filed 7-23-92; 8:45 am]

BILLING CODE 6560-50-F

[OPPTS-51802; FRL 4081-2]

Certain Chemicals; Premanufacture Notices

AGENCY: Environmental Protection Agency (EPA).

ACTION: Notice.

SUMMARY: Section 5(a)(1) of the Toxic Substances Control Act (TSCA) requires any person who intends to manufacture or import a new chemical substance to submit a premanufacture notice (PMN) to EPA at least 90 days before manufacture or import commences. Statutory requirements for section 5(a)(1) premanufacture notices are discussed in the final rule published in the **Federal Register** of May 13, 1983 (48 FR 21722). This notice announces receipt of 17 such PMNs and provides a summary of each.

DATES: Close of review periods:

P 92-1142, September 27, 1992.

P 92-1196, October 7, 1992.

P 92-1197, October 13, 1992.

P 92-1198, 92-1199, September 10, 1992.

P 92-1200, 92-1201, 92-1202, 92-1203, 92-1204, 92-1205, 92-1206, 92-1207, 92-1208, 92-1209, October 11, 1992.

P 92-1210, 92-1211, October 12, 1992.

Written comments by:

P 92-1142, August 28, 1992.

P 92-1196, September 7, 1992.

P 92-1197, September 13, 1992.

P 92-1198, 92-1199, August 11, 1992.

P 92-1200, 92-1201, 92-1202, 92-1203, 92-1204, 92-1205, 92-1206, 92-1207, 92-1208, 92-1209, September 11, 1992.

P 92-1210, 92-1211, September 12, 1992.

ADDRESSES: Written comments, identified by the document control number "(OPPTS-51802)" and the specific PMN number should be sent to: Document Processing Center (TS-790), Office of Pollution Prevention and Toxics, Environmental Protection Agency, 401 M St., SW., Rm. 201ET, Washington, DC, 20460, (202) 260-3532.

FOR FURTHER INFORMATION CONTACT: Susan B. Hazen, Director, Environmental Assistance Division (TS-799), Office of Pollution Prevention and Toxics, Environmental Protection Agency, Rm. E-545, 401 M St., SW., Washington, DC, 20460 (202) 554-1404, TDD (202) 554-0551.

SUPPLEMENTARY INFORMATION: The following notice contains information extracted from the nonconfidential version of the submission provided by the manufacturer on the PMNs received by EPA. The complete nonconfidential document is available in the TSCA Public Docket Office, NE-G004 at the above address between 8 a.m. and noon and 1 p.m. and 4 p.m., Monday through Friday, excluding legal holidays.

P 92-1142

Importer. Confidential.

Chemical. (G) Unsaturated polyester-imide resin.

Use/Import. (G) Heat resistent polyester resin. Import range: Confidential.

P 92-1196

Manufacturer. Valence Technology, Inc.

Chemical. (S) Vanadium oxide.

Use/Production. (S) Cathode active material in a battery. Prod. range: Confidential.

Toxicity Data. Acute oral toxicity: LD50 549 mg/kg species (rat). Acute dermal toxicity: LD50 > 2,000 mg/kg species (rabbit). Eye irritation: strong species (rabbit). Mutagenicity: negative. Skin irritation: negligible species (rabbit).

P 92-1197

Manufacturer. The BF Goodrich Company.

Chemical. (S) 2-Propenenitrile, polymer with 1,3-butadiene, 2,2'-azobis(2-methylbutanenitrile)-initiated.

Use/Production. (G) Elastomer modifier for thermoset resins. Prod. range: Confidential.

P 92-1198

Manufacturer. Confidential.

Chemical. (G) Polyurethane prepolymer.

Use/Production. (G) Industrial sealant and adhesion promoter. Prod. range: Confidential.

P 92-1199

Manufacturer. Ciba-Geigy Corporation.

Chemical. (G) Monoazo dye.

Use/Production. (G) Textile dye. Prod. range: Confidential.

Toxicity Data. Acute oral toxicity: LD50 > 5,000 mg/kg species (rat). Acute dermal toxicity: LD50 > 2,000 mg/kg species (rat). Static acute toxicity: > 1,000 mg/L 96h species (zebra fish). Eye irritation: none species (rabbit). Mutagenicity: negative. Skin irritation: none species (rabbit). Skin sensitization: negative species (guinea pig).

P 92-1200

Manufacturer. Confidential.

Chemical. (G) Hybrid polyurethane.

Use/Production. (G) Reactive component of molded composites. Prod. range: Confidential.

P 92-1201

Manufacturer. Confidential.

Chemical. (G) Hybrid polyurethane.

Use/Production. (G) Reactive component of molded composites. Prod. range: Confidential.

P 92-1202

Manufacturer. Dow Corning Company.

Chemical. (G) Amino-functional alkoxysilane.

Use/Production. (S) Adhesion additive for silicone sealants. Prod. range: Confidential.

Toxicity Data. Acute oral toxicity: LD50 > 2,000 mg/kg species (rat). Acute dermal toxicity: LD50 > 2,000 mg/kg species (rat). Eye irritation: severe species (rabbit). Mutagenicity: negative. Skin irritation: none species (rabbit).

P 92-1203

Manufacturer. Dow Corning Corporation.

Chemical. (G) Amino-functional alkoxysilane.

Use/Production. (S) Adhesion additive for silicone sealants. Prod. range: Confidential.

Toxicity Data. Acute oral toxicity: LD50 > 2,000 mg/kg species (rat). Acute dermal toxicity: LD50 > 2,000 mg/kg species (rat). Eye irritation: severe species (rabbit). Mutagenicity: negative. Skin irritation: none species (rabbit).

P 92-1204

Manufacturer. Dow Corning Corporation.

Chemical. (G) Amino-functional alkoxysilane.

Use/Production. (S) Crosslinker/adhesion promoter. Prod. range: Confidential.

Toxicity Data. Acute oral toxicity: LD50 > 2,000 mg/kg species (rat). Eye irritation: severe species (rabbit). Mutagenicity: negative. Skin irritation: none species (rabbit).

P 92-1205

Manufacturer. Dow Corning Corporation.

Chemical. (G) Amino-functional alkoxysilane.

Use/Production. (S) Crosslinker/adhesion promoter. Prod. range: Confidential.

Toxicity Data. Acute oral toxicity: LD50 > 2,000 mg/kg species (rat). Eye irritation: severe species (rabbit). Mutagenicity: negative. Skin irritation: none species (rabbit).

P 92-1206

Manufacturer. Dow Corning Corporation.

Chemical. (G) Siloxanes and silicones, 2-methylpropyl methox-terminated.

Use/Production. (S) Masonary water repellant. Prod. range: Confidential.

Toxicity Data. Static acute toxicity: LC50 > 213 ppm species (rainbow trout). Mutagenicity: negative.

P 92-1207

Manufacturer. Dow Corning Corporation.

Chemical. (S) Silsequioxanes,(3-(2-aminoethyl)amino)propyl Me, methoxy-terminated.

Use/Production. (S) Silicone water repellant. Prod. range: Confidential.

P 92-1208

Importer. Huls America Inc.

Chemical. (G) Alkyl polyglycolether, phosphoric acid partial ester sodium salt.

Use/Import. (S) Cleaning compound concentrate. Import range: Confidential.

Toxicity Data. Acute oral toxicity: LD50 > 5,000 mg/kg species (rat). Eye irritation: minimal species (rabbit). Skin irritation: none species (rabbit).

P 92-1209

Importer. Confidential.

Chemical. (S) 2-(hydroxy-ethoxy-ethyl)2-azabicyclo(2.2.1)hetane.

Use/Import. (S) Catalyst for polyurethane foam production. Import range: Confidential.

Toxicity Data. Acute oral toxicity: LD50 .430 ml/kg species (rat). Static acute toxicity: time LC50 96h203.1 mg/l species (carp). Skin irritation: slight species (rabbit). Mutagenicity: negative.

P 92-1210

Importer. Himont USA Inc.

Chemical. (G) 2-Methyl-3-azabicyclo(2.2.1)heptane.

Use/Import. (S) Catalyst for polyurethane foam production. Import range: Confidential.

Toxicity Data. Acute oral toxicity: LD50 280 mg/kg species (rat). Acute dermal toxicity: LD50 1510 mg/kg species (rabbit). Skin irritation: strong species (rabbit). Mutagenicity: negative. Static acute toxicity: time LC50 96h1.38 mg/l species (zebra fish). Skin sensitization: negative species (guinea pig).

P 92-1211

Importer. Himont USA Inc.

Chemical. (G) Disubstituted diether propane.

Use/Import. (G) Catalyst system component. Import range: Confidential.

Toxicity Data. Acute oral toxicity: LD50 > 2,000 mg/kg species (rat). Acute dermal toxicity: LD50 > 2,000 mg/kg species (rat). Eye irritation: slight species (rabbit). Mutagenicity: negative. Static acute toxicity: time EC50 24h34 mg/l species (daphnia magna). Skin irritation: moderate species (rabbit). Skin sensitization: negative species (guinea pig).

Dated: July 21, 1992.

Steven Newburg-Rinn,

Acting Director, Information Management Division, Office of Pollution Prevention and Toxics.

[FR Doc. 92-17550 Filed 7-23-92; 8:45 am]

BILLING CODE 6560-50-F

FEDERAL RESERVE SYSTEM

Mildred M. Benner, et al.; Change in Bank Control Notices; Acquisitions of Shares of Banks or Bank Holding Companies

The notificants listed below have applied under the Change in Bank Control Act (12 U.S.C. 1817(j)) and § 225.41 of the Board's Regulation Y (12 CFR 225.41) to acquire a bank or bank holding company. The factors that are considered in acting on the notices are set forth in paragraph 7 of the Act (12 U.S.C. 1817(j)(7)).

The notices are available for immediate inspection at the Federal Reserve Bank indicated. Once the notices have been accepted for processing, they will also be available for inspection at the offices of the Board of Governors. Interested persons may express their views in writing to the Reserve Bank indicated for that notice or to the offices of the Board of Governors. Comments must be received not later than August 13, 1992.

A. Federal Reserve Bank of Chicago (David S. Epstein, Vice President) 230 South LaSalle Street, Chicago, Illinois 60690:

1. Mildred M. Benner, to acquire 73 percent of the voting shares of Bradford Bancorp, Inc., Bradford, Illinois, and thereby indirectly acquire Bradford Banking Company, Bradford, Illinois.

B. Federal Reserve Bank of St. Louis (Randall C. Sumner, Vice President) 411 Locust Street, St. Louis, Missouri 63166:

1. G. Robert Garner and the G. Robert Garner Family Trust, Clinton, Arkansas; to acquire an additional 9.64 percent of the voting shares of Clin-Ark Bankshares, Inc., Clinton, Arkansas, for a total of 16.74 percent and thereby indirectly acquire First National Bank, Clinton, Arkansas.

Board of Governors of the Federal Reserve System, July 20, 1992.

Jennifer J. Johnson,

Associate Secretary of the Board.

[FR Doc. 92-17495 Filed 7-23-92; 8:45 am]

BILLING CODE 6210-01-F

Firstar Corporation; Acquisition of Company Engaged in Permissible Nonbanking Activities

The organization listed in this notice has applied under § 225.23(a)(2) or (f) of the Board's Regulation Y (12 CFR 225.23(a)(2) or (f)) for the Board's approval under section 4(c)(8) of the Bank Holding Company Act (12 U.S.C. 1843(c)(8)) and § 225.21(a) of Regulation Y (12 CFR 225.21(a)) to acquire or control voting securities or assets of a company engaged in a nonbanking activity that is listed in § 225.25 of Regulation Y as closely related to banking and permissible for bank holding companies. Unless otherwise noted, such activities will be conducted throughout the United States.

The application is available for immediate inspection at the Federal Reserve Bank indicated. Once the application has been accepted for processing, it will also be available for inspection at the offices of the Board of Governors. Interested persons may express their views in writing on the question whether consummation of the proposal can "reasonably be expected to produce benefits to the public, such as greater convenience, increased competition, or gains in efficiency, that outweigh possible adverse effects, such as undue concentration of resources, decreased or unfair competition, conflicts of interests, or unsound banking practices." Any request for a hearing on this question must be accompanied by a statement of the reasons a written presentation would not suffice in lieu of a hearing, identifying specifically any questions of fact that are in dispute, summarizing the evidence that would be presented at a hearing, and indicating how the party commenting would be aggrieved by approval of the proposal.

Comments regarding the application must be received at the Reserve Bank indicated or the offices of the Board of Governors not later than August 17, 1992.

A. Federal Reserve Bank of Chicago (David S. Epstein, Vice President) 230 South LaSalle Street, Chicago, Illinois 60690:

1. Firstar Corporation, Milwaukee, Wisconsin; to engage through a joint venture in operating Elan Life Insurance Company, Milwaukee, Wisconsin, and thereby engage in credit life insurance activities pursuant to § 225.25(b)(8)(i) of the Board's Regulation Y. These activities will be conducted in Wisconsin, Minnesota, Iowa, Illinois, Arizona and Florida.

Board of Governors of the Federal Reserve System, July 20, 1992.

Jennifer J. Johnson,

Associate Secretary of the Board.

[FR Doc. 92-17497 Filed 7-23-92; 8:45 am]

BILLING CODE 6210-01-F

Meridian Bancorp, Inc., et al.; Notice of Applications to Engage de novo in Permissible Nonbanking Activities

The companies listed in this notice have filed an application under § 225.23(a)(1) of the Board's Regulation Y (12 CFR 225.23(a)(1)) for the Board's approval under section 4(c)(8) of the Bank Holding Company Act (12 U.S.C. 1843(c)(8)) and § 225.21(a) of Regulation Y (12 CFR 225.21(a)) to commence or to engage *de novo*, either directly or through a subsidiary, in a nonbanking activity that is listed in § 225.25 of Regulation Y as closely related to banking and permissible for bank holding companies. Unless otherwise noted, such activities will be conducted throughout the United States.

Each application is available for immediate inspection at the Federal Reserve Bank indicated. Once the application has been accepted for processing, it will also be available for inspection at the offices of the Board of Governors. Interested persons may express their views in writing on the question whether consummation of the proposal can "reasonably be expected to produce benefits to the public, such as greater convenience, increased competition, or gains in efficiency, that outweigh possible adverse effects, such as undue concentration of resources, decreased or unfair competition, conflicts of interests, or unsound banking practices." Any request for a hearing on this question must be accompanied by a statement of the reasons a written presentation would not suffice in lieu of a hearing, identifying specifically any questions of fact that are in dispute, summarizing the evidence that would be presented at a hearing, and indicating how the party commenting would be aggrieved by approval of the proposal.

Unless otherwise noted, comments regarding the applications must be received at the Reserve Bank indicated or the offices of the Board of Governors not later than August 17, 1992.

A. Federal Reserve Bank of Philadelphia (Thomas K. Desch, Vice President) 100 North 6th Street, Philadelphia, Pennsylvania 19105:

1. Meridian Bancorp, Inc., Reading, Pennsylvania; to engage *de novo* through its subsidiary, Meridian Securities, Inc., Reading, Pennsylvania, in underwriting and dealing in government obligations and other securities pursuant to § 225.25(b)(16) of the Board's Regulation Y.

B. Federal Reserve Bank of Minneapolis (James M. Lyon, Vice President) 250 Marquette Avenue, Minneapolis, Minnesota 55480:

1. Norwest Corporation, Minneapolis, Minnesota; to engage *de novo* through its subsidiary, Norwest Investment Securities, Inc., Minneapolis, Minnesota, in acting as investment or financial advisor to the extent of providing portfolio investment advice to insured depository institutions pursuant to § 225.25(b)(4); and providing management consulting advice to nonaffiliated bank and nonbank depository institutions pursuant to § 225.25(b)(11) of the Board's Regulation Y.

Board of Governors of the Federal Reserve System, July 20, 1992.

Jennifer J. Johnson,

Associate Secretary of the Board.

[FR Doc. 92-17494 Filed 7-23-92; 8:45 am]

BILLING CODE 6210-01-F

DEPARTMENT OF HEALTH AND HUMAN SERVICES

Agency for Health Care Policy and Research

Public Meeting on Low Back Problems Guideline

The Agency for Health Care Policy and Research (AHCPR) announces that a public meeting will be held to receive comments and information pertaining to development of the clinical practice guideline on Low Back Problems. The focus of this guideline is the assessment and treatment of acute low back problems (i.e. within the first three months of symptoms) in adults. The guideline is being developed by a private-sector panel of health care experts and consumers. The panel is supported by AHCPR.

A notice announcing that AHCPR was arranging for the development of this clinical guideline was published in the Federal Register on March 18, 1991 (56 FR 11452). That notice invited nominations for experts and consumers to serve on the panel that is developing the guideline.

A public meeting to provide an opportunity for other interested parties to contribute relevant information and comments will be held as follows: Meeting: Low Back Problems Guideline, Wednesday, September 16, 1992, From 8:30 a.m. to 11:30 a.m., Sheraton Washington Hotel, Annapolis/Rockville Room, 2660 Woodley Rd, NW., Washington, DC 20008, Phone: (202) 328-2000.

Background

The Omnibus Budget Reconciliation Act of 1989 (Pub. L. 101-239) added a new title IX to the Public Health Service Act (the Act), which established the Agency for Health Care Policy and Research (AHCPR) to enhance the quality, appropriateness, and effectiveness of health care services, and access to such services. (See 42 U.S.C. 299-299c-6 and 1320b-12.)

As part of its legislative mandate, AHCPR is arranging for the development, periodic review, and updating of clinically relevant guidelines that may be used by physicians, other health care practitioners, educators, and consumers to assist in determining how diseases, disorders, and other health conditions can most effectively and appropriately be prevented, diagnosed, treated, and clinically managed.

Section 912 of the Act (42 U.S.C. 299b-1(b)) requires that the guidelines be:

1. Based on the best available research and professional judgment;

2. Presented in formats appropriate for use by physicians, other health care practitioners, medical educators, medical review organizations, and consumers; and

3. Presented in treatment-specific or condition-specific forms appropriate for use in clinical practice, educational programs, and reviewing quality and appropriateness of medical care.

Section 914 of the Act (42 U.S.C. 299-3(a)) identifies factors to be considered in establishing priorities for guidelines, including the extent to which the guidelines would:

1. Improve methods of prevention, diagnosis, treatment, and clinical management, and thereby benefit a significant number of individuals;

2. Reduce clinically significant variations among clinicians in the particular services and procedures utilized in making diagnoses and providing treatments; and

3. Reduce clinically significant variations in the outcomes of health care services and procedures.

Also, in accordance with title IX of the PHS Act and section 1142 of the Social Security Act, the Administrator is to assure that the needs and priorities of the Medicare program are reflected appropriately in the agenda and priorities for development of guidelines.

Arrangements for the September 16, 1992 Public Meeting on Low Back Problems

Representatives of organizations and other individuals are invited to provide relevant written comments and information, and make a brief (5 minutes or less) oral statement to the panel. Individuals and representatives who would like to attend must register with Mikalix and Company (M & C), the contractor providing administrative support to this panel, at the address set out below by September 7, 1992, and indicate whether they plan to make an oral statement. A copy of the oral statement, comments, and information should be submitted to M & C by September 7, 1992. If more requests to make oral statements are received than can be accommodated between 8:30 a.m. and 11:30 a.m. on September 16, 1992, the chairperson will allocate speaking time in a manner which ensures, to the extent possible, that a range of views of health care professionals, consumers, product manufacturers, and pharmaceutical manufacturers is presented. Those who cannot be granted their requested speaking time because of time constraints are assured that their written comments will be considered in developing the guideline.

If sign language interpretation or other reasonable accommodation for a disability is needed, please contact M & C by September 7, 1992, at the address below.

Registration should be made with, and written materials submitted to: Mikalix and Co. (M & C), Attn: Ms. Demie Lyons, 404 Wyman Street, suite 375, Waltham, MA 02154-1210, Phone: (617) 290-0090, Fax: (617) 290-0180.

Dated: July 16, 1992.

J. Jarrett Clinton,

Administrator.

[FR Doc. 92-17434 Filed 07-23-92; 8:45 am]

BILLING CODE 4160-90-M

Public Meeting on Methods for Deriving and Assessing Medical Review Criteria, Standards of Quality, and Performance Measures

The Agency for Health Care Policy and Research (AHCPR) announces that a public meeting will be held to receive comments and information pertaining to methods for deriving medical review criteria, standards of quality, and performance measures from clinical practice guidelines being developed by panels of experts and contractors supported by AHCPR and by other groups. These methods are being developed by a private-sector workgroup of health care experts representing academia, third-party payors, health care practitioners, peer reviewers, medical record specialists, and hospitals. The workgroup is supported by AHCPR.

A notice announcing that AHCPR was arranging for the establishment of this workgroup was published in the **Federal Register** on January 23, 1992 (57 FR 2750). That notice invited nominations for individuals to serve on the workgroup.

A public meeting to provide an opportunity for other interested parties to contribute relevant information and comments will be held as follows: Meeting: Tuesday, September 1, 1992, 9:00 a.m. to 12:00 noon, Crystal City Marriott Hotel, 1999 Jefferson Davis Highway, Arlington, VA 22202, (703) 413-5550.

Background

The Omnibus Budget Reconciliation Act of 1989 (Pub. L. 101-239) added a new title IX to the Public Health Service Act (the Act), which established the Agency for Health Care Policy and Research (AHCPR) to enhance the quality, appropriateness, and effectiveness of health care services, and access to such services. (See 42 U.S.C. 299-299c-6 and 1320b-12.)

As part of its legislative mandate, AHCPR is arranging for the development and periodic review and updating of clinical practice guidelines, and medical review criteria, standards of quality, and performance measures through which health care providers and other appropriate entities may assess or review the provision of health care and assure the quality of such care.

Section 912 of the Act (42 U.S.C. 299b-1(b)) requires that the guidelines, medical review criteria, standards of quality, and performance measures be:

1. Based on the best available research and professional judgment;

2. Presented in formats appropriate for use by physicians, health care practitioners, medical educators, medical review organizations, and consumers; and

3. Presented in treatment-specific or condition-specific forms appropriate for use in clinical practice, educational programs, and reviewing quality and appropriateness of medical care.

In accordance with section 914 of the Act (42 U.S.C. 299b-3(b)), the workgroup is developing methods for use by contractors and expert panels, as well as other groups, in developing, reviewing, and updating medical review criteria, standards of quality, and performance measures.

Arrangements for the September 1, 1992 Public Meeting on Methods for Deriving and Assessing Medical Review Criteria, Standards of Quality, and Performance Measures

Representatives of organizations and other individuals are invited to provide relevant written comments and information, and make a brief (5 minutes or less) oral statement to the workgroup. Individuals and representatives who would like to attend must register with Mikalix and Company, the contractor providing administrative support to this workgroup, at the address set out below by August 18, 1992, and indicate whether they plan to make an oral statement. A copy of the oral statement, comments, and information should be submitted to Mikalix and Company by August 18, 1992. If more requests to make oral statements are received than can be accommodated between 9 a.m. and 12 noon on September 1, 1992, the chairperson will allocate speaking time in a manner which ensures, to the extent possible, that a range of views of health care professionals, consumers, health service researchers, and individuals with experience in quality assurance, quality improvement, and utilization review is presented. Those who cannot be granted their requested speaking time because of time constraints are assured that their written comments will be considered by the workgroup.

If sign language interpretation or other reasonable accommodation for a disability is needed, please contact Mikalix and Company by August 18, 1992 at the address below.

Registration should be made with, and written materials submitted to: Mikalix and Company, Attn: Carol Delaney, RN, 404 Wyman Street—suite 375, Waltham, MA 02154-1210, Phone: (617) 290-0090, Fax: (617) 290-0180.

Dated: July 16, 1992.

J. Jarrett Clinton,

Administrator.

[FR Doc. 92-17435 Filed 7-23-92; 8:45 am]

BILLING CODE 4160-90-M

Agency for Toxic Substances and Disease Registry

[Program Announcement Number 234]

State-Based Surveillance to Determine the Relationship Between Environmental Exposures and Adverse Health Outcomes

Introduction

The Agency for Toxic Substances and Disease Registry (ATSDR) announces the availability of fiscal year (FY) 1992 funds for a grant program to continue Louisiana Department of Health and Hospitals ongoing surveillance project on determining the relationship between human exposure to hazardous substances in the environment and adverse health outcomes (e.g., birth defects and reproductive disorders, cancer (selected sites), immune function disorders, kidney dysfunction, liver dysfunction, lung and respiratory diseases and neurotoic disorders).

The Public Health Service (PHS) is committed to achieving the health promotion and disease prevention objectives of Healthy People 2000, a PHS-led national activity to reduce morbidity and mortality and improve the quality of life. This announcement is related to the priority areas of Environmental Health and Surveillance and Data Systems. (For ordering a copy of Healthy People 2000, see the section **WHERE TO OBTAIN ADDITIONAL INFORMATION.**)

Authority

This program is authorized under Section 104(i)(1)(E) and (15) of the Comprehensive Environmental Response, Compensation, and Liability Act of 1980 (CERCLA), as amended by the Superfund Amendments and Reauthorization Act of 1986 (SARA) [42 U.S.C. 9604(i)(1)(E) and (15)].

Eligible Applicant

Assistance will only be provided to the Louisiana Department of Health and Hospitals (LDHH). No other application will be solicited. In 1990, ATSDR entered into a grant with LDHH to establish a statewide surveillance system to identify correlations between exposure to hazardous waste and specific health outcomes. This project involves linking health outcome databases with appropriate environmental databases through a Geographical Information System (GIS). During the first two years of the project, LDHH evaluated and upgraded existing health outcome databases (vital statistics, the tumor registry and the patient data system) for suitability for use in this surveillance system and purchased a GIS work station. LDHH has begun the immense task of entering the state's geographical, census, environmental and health data into the GIS. Initially, data from a single parish is being entered as a model for the remainder of the state.

LDHH has developed unique expertise in the use of GIS and database management while assembling the structure of this system. Continuation of this preliminary work by the LDHH will enable it to place the health and environmental data for the remainder of the state on the GIS system and make this an exceptional surveillance system for the correlation of both health and environmental data.

Availability of Funds

Approximately $277,600 is available in FY 1992 to fund this grant project. It is expected that the award will begin on or about September 28, 1992, and will be made for 12-month budget periods within a project period of up to 2 years. Funding estimates may vary and are subject to change.

Continuation award within the project period will be made on the basis of satisfactory progress and the availability of funds.

Use of Funds

Funds may be expended for reasonable program purposes, such as personnel, travel, supplies and services. Funds for contractual services may be requested. However, the grantee, as the direct and primary recipient of PHS grant funds, must perform a substantive role in carrying out project activities and not merely serve as a conduit for an award to another party or provide funds to an ineligible party.

Purpose

The purpose of this grant program is to adapt existing databases of health outcomes and environmental exposures in Louisiana so they can be linked to form an effective surveillance system. This system will be used to explore the relationship between environmental exposure and adverse health outcomes by monitoring the trends for health outcomes and environmental parameters. It will be used to recommend further studies to determine the nature of these associations.

Program Requirements

ATSDR will provide financial assistance to the applicant in conducting surveillance activities to explore the relationship between exposure to hazardous substances and the occurrence and risk factors for disease.

The program requirements include, but are not limited to, surveillance activities designed to evaluate the occurrence of adverse health effects over time in a population. This will include the evaluation of the incidence or prevalence of a disease, disease symptoms, self-reported health concerns, or biological markers of disease or exposure. Efforts should be made to link information on adverse health effects with environmental data.

In the application for financial assistance, the applicant should understand that under a grant award, the grantee is expected to conduct surveillance of exposed individuals without substantial programmatic involvement.

Evaluation Criteria

A. The application will be reviewed and evaluated based on the following criteria:

1. The applicant's understanding of the purpose of the surveillance.
2. The extent to which background information and other data demonstrate that the applicant has the administrative support and accessibility to an adequate number of participants in the target groups to accomplish study goals.
3. The extent to which the applicant's objectives are realistic, measurable, time-phased, and related to program requirements.
4. The quality and potential effectiveness of the applicant's proposed activities and methods for meeting the stated objectives.
5. The adequacy of plans to evaluate progress in implementing methods and achieving objectives.
6. The extent to which qualified and experienced personnel are available to carry out the proposed activities.
7. The quality of the applicant's proposed method to disseminate the surveillance results to state and local public health officials, policy- and decision-makers, community residents, and to other concerned individuals and organizations.
8. The budget request is clearly justified and consistent with the intended use of grant funds.

B. Continuation Awards within the project period will be made on the basis of the following criteria:

1. Satisfactory progress has been made in meeting project objectives;
2. Objectives for the new budget period are realistic, specific, and measurable;
3. Proposed changes in described long-term objectives, methods of operation, need for grant support, and/or evaluation procedures will lead achievement of project objectives; and
4. The budget request is clearly justified and consistent with the intended use of grant funds.

Executive Order 12372 Review

This application is subject Intergovernmental Review of Federal Programs as governed by Executive Order 12372. Executive Order 12372 sets up a system for state and local government review of proposed Federal assistance applications. Applicants (other than federally recognized Indian tribal governments) should contact their state Single Point of Contracts (SpOCs) as early as possible to alert them to the prospective applications and to receive any necessary instructions on the state process. For proposed projects serving more than one state, the applicant is advised to contact the SPOC of each affected state. A current list of SpOCs is included in the application kit. If SpOCs have any state process recommendations on applications submitted to CRDC, they should forward them to Henry S. Cassell, III, Grants Management Officer, Grants Management Branch, Procurement and Grants Office, Centers for Disease Control, 255 East Paces Ferry Road, NE., Atlanta, Georgia 30305, no later than 60 days after the application deadline date. The granting agency does not guarantee to "accommodate or explain" state process recommendations it receives after that date.

Catalog of Federal Domestic Assistance Number

The Catalog of Federal Domestic Assistance number is 93.161.

Other Requirements

A. Technical Review

All protocols, studies, and results of research that ATSDR carries out of funds in whole or in part will be reviewed to meet the requirements of CERCLA section 104(i)(13).

B. Confidentiality

This study does not involve the use of human subjects. It is a database study. Some of the data will be collected from databases that have personal identifiers: vital statistics and tumor registry records for example. These databases adhere to strict standards to maintain the confidentiality of the records. There were numerous studies done in the past using these databses. To avoid breaks of confidentiality the Office of Public Health follows strict criteria before allowing researchers to have access to data containing personal identifiers. In this study, rates, ratios, proportions and other statistics will be derived from these confidential records. No duplication of the original databases will be made and confidentiality rules already in application will be strictly followed.

Application Submission and Deadline Dates

The Louisiana Department of Health and Hospitals must submit an original and two copies of application PHS Form 5161-1 to Henry S. Cassell, III, Grants Management Officer, Grants Management Branch, Procurement and Grants Office, 255 East Paces Ferry Road NE., room 300, Mail Stop E-14, Atlanta, Georgia 30305, on or before July 28, 1992. (By formal agreement, the CDC Procurement and Grants Office will act for and on behalf of ATSDR on this matter.)

Where To Obtain Additional Information

If you are interested in obtaining additional information regarding this program, please refer to Announcement Number 234 and contact Van Malone, Grants Management Specialist, Grants Management Branch, Procurement and Grants Office, Centers for Disease Control, 255 East Paces Ferry Road NE., room 300, Mail Stop E-14, Atlanta, Georgia 30305 or by calling (404) 842-6797. Programmatic technical assistance may be obtained from Dr. Wendy E. Kaye, Chief, Epidemiology and Surveillance Branch, Division of Health Studies, Agency for Toxic Substances and Disease Registry, 1600 Clifton Road NE., Mail Stop E-31, Atlanta, Georgia 30333 or by calling (404) 639-6203.

A copy of Healthy People 2000 (Full Report, Stock No. 017-001-00474-0) or Healthy People 2000 (Summary Report, Stock No. 017-001-00473-1) referenced in the INTRODUCTION may be obtained through the Superintendent of Documents, Government Printing Office, Washington, DC 20402-9325, (Telephone 202-783-3238).

Dated: July 20, 1992.

William L. Roper,

Administrator, Agency for Toxic Substances and Disease Registry.

[FR Doc. 92-17525 Filed 7-23-92; 8:45 am]

BILLING CODE 4160-70-M

Centers for Disease Control

[Announcement Number 236]

Cooperative Agreement for Studies to Evaluate the Behavioral, Donation History, and Laboratory Characteristics of United States Blood Donors Infected With Human Immunodeficiency Virus (HIV)

Introduction

The Centers for Disease Control (CDC), the Nation's prevention agency, announces the availability of fiscal year (FY) 1992 funds for cooperative agreements with blood centers and other eligible applicants, to provide assistance for epidemiological surveillance studies of human immunodeficiency virus (HIV). These studies will be conducted to determine the epidemiology of human immunodeficiency virus (HIV), related retroviruses, and related conditions in blood donors whose blood tests positive for HIV antibody and does not become part of the Nation's blood supply.

The Public Health Service (PHS) is committed to achieving the health promotion and disease prevention objectives of Healthy People 2000, a PHS-led national activity to reduce morbidity and mortality and improve the quality of life. This announcement is related to the priority area of HIV Infection. (For ordering a copy of Healthy People 2000, see the section Where to Obtain Additional Information.)

Authority: This program is authorized under section 301(a) of the Public Health Service Act (42 U.S.C. 241(a)), as amended, and Section 317(k)(3) of the Public Health Service Act (42 U.S.C. 247b(k)(3)).

Eligible Applicants

Eligible applicants include nonprofit and for-profit blood centers and organizations. Thus, universities, colleges, research institutions, hospitals, other public and private organizations, state and local health departments of their bona fide agents or instrumentalities, and small, minority and/or women-owned businesses are eligible for these cooperative agreements.

Availability of Funds

Approximately $1,000,000 is available in FY 1992 to fund between 5-10 cooperative agreement awards. It is expected that the average award will be $80,000, ranging from $25,000 to $500,000. It is expected that the awards will begin on or about September 29, 1992, and are usually made for a 12-month budget

period within a project period of up to 5 years. Funding estimates may vary and are subject to change. Continuation awards within the project period will be made on the basis of satisfactory progress and the availability of funds.

Purpose

The blood donor population is useful for detecting and quantifying uncommon or unrecognized modes of HIV transmission in the general population because persons at known risk for HIV infection are excluded from donating blood. Trends in HIV prevalence and incidence within specific demographic subgroups can be determined for first-time and repeat donors whose blood tests positive for HIV antibody and does not become part of the Nation's blood supply. Combining these trends with HIV-risk profile data of seropositive donors provides a rate for HIV seropositive donors with no identical risk. Epidemiologic and behavioral data from these seropositive donors will help in the development and evaluation of future donor deferral strategies. Data from these surveys and from studies of other sentinel populations will be used in the evaluation of the levels and trends of HIV infection in the United States.

The purpose of these cooperative agreement awards is to provide assistance for:

A. Determining and monitoring the extent of HIV infection in blood donors at selected centers.

B. Analyzing the characteristics of infected donors and controls in order to strengthen the effectiveness of the donor screening and deferral processes.

C. Analyzing the risk behavior characteristics of infected donors to assess distribution and trends of HIV.

D. Monitoring for emergency of additional human immunodeficiency (HIV) viruses as well as other viruses relevant to the epidemiology of HIV in U.S. blood donors.

E. Estimating the risk of HIV transmission from screened blood.

Program Requirements

In conducting activities to achieve the purpose of this program, the recipient shall be responsible for conducting activities under A., below, and CDC shall be responsible for conducting activities under B., below. The application should be presented in a manner that demonstrates the applicant's ability to address the proposed activities in a collaborative manner with CDC.

A. Recipient Activities

1. Participate in the development of a study design to evaluate the levels and trends of HIV infection in U.S. blood donors.

2. Participate in the development of study protocols, consent forms, questionnaires, and data collection methods for the research studies.

3. Conduct epidemiologic studies at specified sites using approved study protocols. These studies will follow protocols and methods established through the recipient's participation with CDC and other collaborating institutions. Study activities will include, but may not be limited to: Obtaining institutional approvals for the conduct of research studies, (institutional reviews, human subjects review committee approvals, etc.), obtaining the consent of donors and controls to participate in the study, conducting interviews of controls and donors seropositive for HIV, completing study questionnaires, performing analyses of data for quality assurance, and transmitting data to CDC.

4. Perform selected laboratory tests according to established research protocols. Collaborate with CDC on the interpretation and analysis of laboratory test results. Store and/or submit to CDC all HIV seropositive sera and additional sera or cells as may be required by the research study design.

5. Participate in the development and maintenance of a data management system for the study. Share study data with CDC on a timely basis.

6. Conduct the analysis of the study data and the presentation of study findings in scientific presentations and publications. Obtain pre-publication and pre-presentation clearances from the CDC prior to any release of study data or analysis.

B. CDC Activities

1. Provide technical assistance in the design and conduct of the research.

2. Provide technical assistance in the development of study protocols, consent forms, and questionnaires, including training and pretesting as necessary.

3. Assist in designing a data management system.

4. Perform selected laboratory tests.

5. Coordinate research activities among the different sites, including laboratories and consultants.

6. Collaborate in the analysis of research information and the presentation of research findings with the recipient.

Evaluation Criteria

Applications will be reviewed and evaluated according to the following criteria:

1. The applicant must demonstrate an understanding of HIV, HIV epidemiologic studies, and the principles of scientific study. The applicant must also demonstrate knowledge, ability and resources to conduct epidemiologic studies of HIV and related viruses in U.S. blood donors. (30 points)

2. The applicant must demonstrate the ability to enroll and evaluate fifty percent of eligible study participants and/or at least fifteen seropositive donors annually in order to obtain a study sample size to allow statistical analysis of results. (30 points)

3. The extent to which the applicant's proposed objectives are measurable, specific, time-phased, and related to required recipient activities and program purpose. (10 points)

4. The quality of the applicant's plan for conducting and evaluating program activities and the potential effectiveness of the proposed methods in meeting its objectives, including the plan for notifying seropositive donors. (10 points)

5. The applicant's willingness to cooperate in a study with CDC and other collaborating institutions. (10 points)

6. The size, qualifications, and time allocation of the proposed staff and the availability of facilities to be used during the study. (10 points)

7. The extent to which the budget request and proposed use of project funds are appropriate and reasonable. (not weighted)

Other Requirements

Paperwork Reduction Act

Data collection initiated under this cooperative agreement has been approved by the Office of Management and Budget under number 0920-0232, "Family of HIV Seroprevalence Surveys," Expiration date October 1992.

Human Subjects

If the proposed project involves research on human subjects, the applicant must comply with the Department of Health and Human Services Regulations (45 CFR part 46) regarding the protection of human subjects. Assurance must be provided tc demonstrate that the project will be subject to initial and continuing review by an appropriate institutional review committee. The applicant will be responsible for providing assurance in accordance with the appropriate

guidelines and form provided in the application kit.

HIV/AIDS Requirements

Recipients must comply with the document entitled "Content of AIDS-Related Written Materials, Pictorials, Audiovisuals, Questionnaires, Survey Instruments, and Educational Sessions" (June 1992), a copy of which is included in the application kit. In complying with the requirements for a program review panel, recipients are encouraged to use an existing program review panel such as the one created by the state health department's HIV/AIDS prevention program. If the recipient forms its own program review panel, at least one member must be an employee (or a designated representative) of a government health department consistent with the Content guidelines. The names of the review panel members must be listed on the Assurance of Compliance form CDC 0.113, which is also included in the application kit. The recipient must submit the program review panel's report that indicates all materials have been reviewed and approved.

Executive Order 12372 Review

The application is not subject to review as governed by Executive Order 12372, Intergovernmental Review of Federal Programs.

Catalog of Federal Domestic Assistance Number

The Catalog of Federal Domestic Assistance number is 93.118.

Application Submission and Deadline

The original and two copies of the application PHS Form 5161-1 must be submitted to Edwin L. Dixon, Grants Management Officer, Grants Management Branch, Procurement and Grants Office, Centers for Disease Control, 255 East Paces Ferry Road, NE., room 300, Mailstop E-14, Atlanta, Georgia 30305, on or before August 21, 1992.

1. *Deadline:* Applications shall be considered as meeting the deadline if they are either:

(a) received on or before the deadline date; or

(b) sent on or before the deadline date and received in time for submission to the independent review group. Applicants must request a legibly dated U.S. Postal Service postmark or obtain a legibly dated receipt from a commercial carrier or the U.S. Postal Service. Private metered postmarks shall not be acceptable as proof of timely mailing.

2. *Late Applications:* Applications which do not meet the criteria in 1.(a) or 1.(b) above are considered late applications. Late applications will not be considered in the current competition and will be returned to the applicant.

Where to Obtain Additional Information

A complete program description, information on application procedures, an application package, and business management technical assistance may be obtained from Nealean Austin Grants Management Specialist, Grants Management Branch, Procurement and Grants Office, Centers for Disease Control, 255 East Paces Ferry Road, NE., room 300, Atlanta, Georgia 30305 or by calling (404) 842-6508.

Programmatic technical assistance may be obtained from Lyle Petersen, M.D., Division of HIV/AIDS, National Center for Infectious Diseases, Centers for Disease Control, Atlanta, Georgia 30333, (404) 639-2082.

Please refer to Announcement Number 236 when requesting information and submitting an application.

Potential applicants may obtain a copy of Healthy People 2000 (Full Report, Stock No. 017-001-00474-0) or Healthy People 2000 (Summary Report, Stock No. 017-001-00473-1) referenced in the **INTRODUCTION** through the Superintendent of Documents, Government Printing Office, Washington, DC 20402-9325, (Telephone (202) 783-3238).

Dated: July 20, 1992.

Ladene H. Newton,

Acting Associate Director for Management and Operations, Centers for Disease Control.

[FR Doc. 92-17524 Filed 7-23-92; 8:45 am]

BILLING CODE 4160-18-M

National Committee on Vital and Health Statistics (NCVHS) Executive Subcommittee; Meeting

Pursuant to Public Law 92-463, the National Center for Health Statistics (NCHS), Centers for Disease Control, announces the following committee meeting.

Name: NCVHS Executive Subcommittee.

Time and Date: 8:30 a.m.-5 p.m., August 11, 1992.

Place: 2021 K Street, NW., suite 800, Washington, DC 20006.

Status: Open.

Purpose: The purpose of this meeting is for the Executive Subcommittee to review the work plans of NCVHS and other subcommittees. The Executive Submittee will plan the November 4-6, 1992, NCVHS meeting.

Contact Person for More Information: Substantive program information as well as summaries of the meeting and a roster of committee members may be obtained from Gail F. Fisher, Ph.D., Executive Secretary, NCVHS, NCHS, room 1100, Presidential Building, 6525 Belcrest Road, Hyattsville, Maryland 20782, telephone 301/436-7050.

Dated: July 20, 1992.

Elvin Hilyer,

Associate Director for Policy Coordination, Centers for Disease Control.

[FR Doc. 92-17526 Filed 7-23-92; 8:45 am]

BILLING CODE 4160-18-M

Food and Drug Administration

Advisory Committee; Notice of Meeting

AGENCY: Food and Drug Administration, HHS.

ACTION: Notice.

SUMMARY: This notice announces a forthcoming meeting of a public advisory committee of the Food and Drug Administration (FDA). This notice also summarizes the procedures for the meeting and methods by which interested persons may participate in open public hearings before FDA's advisory committees.

MEETING: The following advisory committee meeting is announced:

Anesthetic and Life Support Drugs Advisory Committee

Date, time, and place. August 31, 1992, and September 1, 1992, 8:30 a.m., Conference Rms. D and E, Parklawn Bldg., 5600 Fishers Lane, Rockville, MD.

Type of meeting and contact person. Open public hearing, August 31, 1992, 8:30 a.m. to 9 a.m., unless public participation does not last that long; open committee discussion, 9 a.m. to 11:30 a.m.; closed committee deliberations, 11:30 a.m. to 5:30 p.m.; open public hearing, September 1, 1992 8:30 a.m. to 9 a.m., unless public participation does not last that long; open committee discussion, 9 a.m. to 11 a.m.; closed committee deliberations, 11 a.m. to 4 p.m.; Isaac F. Roubein, Center for Drug Evaluation and Research (HFD-9), Food and Drug Administration, 5600 Fishers Lane, Rockville, MD 20857, 301-443-5455.

General function of the committee. The committee reviews and evaluates data on the safety and effectiveness of marketed and investigational human drugs for use in the field of anesthesiology and surgery.

Agenda—Open public hearing. Interested persons may present data, information, or views, orally or in

writing, on issues pending before the committee. Those desiring to make formal presentations should notify the contact person before August 15, 1992, and submit a brief statement of the general nature of the evidence or arguments they wish to present, the names and addresses of proposed participants, and an indication of the approximate time required to make their comments.

Open committee discussion. On August 31, 1992, the committee will discuss new drug application (NDA) 20-118, Suprane® (desflurane), Anaquest, Division of BOC, Inc. On September 1, 1992, the committee will discuss adverse experience reports on NDA 19-627, Diprivan® (propofol), ICI Pharmaceuticals-Stuart Pharmaceutical.

Closed committee deliberations. On August 31, 1992, and September 1, 1992, the committee will review trade secret and/or confidential commercial information relevant to NDA 20-118, Suprane® (desflurane), Anaquest, Division of BOC, Inc. This portion of the meeting will be closed to permit discussion of this information (5 U.S.C. 552b(c)(4)).

Each public advisory committee meeting listed above may have as many as four separable portions: (1) An open public hearing, (2) an open committee discussion, (3) a closed presentation of data, and (4) a closed committee deliberation. Every advisory committee meeting shall have an open public hearing portion. Whether or not it also includes any of the other three portions will depend upon the specific meeting involved. The dates and times reserved for the separate portions of each committee meeting are listed above.

The open public hearing portion of each meeting shall be at least 1 hour long unless public participation does not last that long. It is emphasized, however, that the 1 hour time limit for an open public hearing represents a minimum rather than a maximum time for public participation, and an open public hearing may last for whatever longer period the committee chairperson determines will facilitate the committee's work.

Public hearings are subject to FDA's guideline (Subpart C of 21 CFR part 10) concerning the policy and procedures for electronic media coverage of FDA's public administrative proceedings, including hearings before public advisory committees under 21 CFR part 14. Under 21 CFR 10.205, representatives of the electronic media may be permitted, subject to certain limitations, to videotape, film, or otherwise record FDA's public administrative proceedings, including presentations by participants.

Meetings of advisory committees shall be conducted, insofar as is practical, in accordance with the agenda published in this **Federal Register** notice. Changes in the agenda will be announced at the beginning of the open portion of a meeting.

Any interested person who wishes to be assured of the right to make an oral presentation at the open public hearing portion of a meeting shall inform the contact person listed above, either orally or in writing, prior to the meeting. Any person attending the hearing who does not in advance of the meeting request an opportunity to speak will be allowed to make an oral presentation at the hearing's conclusion, if time permits, at the chairperson's discretion.

The agenda, the questions to be addressed by the committee, and a current list of committee members will be available at the meeting location on the day of the meeting.

Transcripts of the open portion of the meeting will be available from the Freedom of Information Office (HFI-35), Food and Drug Administration, Rm. 12A-16, 5600 Fishers Lane, Rockville, MD 20857, approximately 15 working days after the meeting, at a cost of 10 cents per page. The transcript may be viewed at the Dockets Management Branch (HFA-305), Food and Drug Administration, Rm. 1-23, 12420 Parklawn Dr., Rockville, MD 20857, approximately 15 working days after the meeting, between the hours of 9 a.m. and 4 p.m., Monday through Friday. Summary minutes of the open portion of the meeting will be available from the Freedom of Information Office (address above) beginning approximately 90 days after the meeting.

The Commissioner, with the concurrence of the Chief Counsel, has determined for the reasons stated that those portions of the advisory committee meetings so designated in this notice shall be closed. The Federal Advisory Committee Act (FACA) (5 U.S.C. App. 2, 10(d)), permits such closed advisory committee meetings in certain circumstances. Those portions of a meeting designated as closed, however, shall be closed for the shortest possible time, consistent with the intent of the cited statutes.

The FACA, as amended, provides that a portion of a meeting may be closed where the matter for discussion involves a trade secret; commercial or financial information that is privileged or confidential; information of a personal nature, disclosure of which would be a clearly unwarranted invasion of personal privacy; investigatory files compiled for law enforcement purposes; information the premature disclosure of which would be likely to significantly frustrate implementation of a proposed agency action; and information in certain other instances not generally relevant to FDA matters.

Examples of portions of FDA advisory committee meetings that ordinarily may be closed, where necessary and in accordance with FACA criteria, include the review, discussion, and evaluation of drafts of regulations or guidelines or similar preexisting internal agency documents, but only if their premature disclosure is likely to significantly frustrate implementation of proposed agency action; review of trade secrets and confidential commercial or financial information submitted to the agency; consideration of matters involving investigatory files compiled for law enforcement purposes; and review of matters, such as personnel records or individual patient records, where disclosure would constitute a clearly unwarranted invasion of personal privacy.

Examples of portions of FDA advisory committee meetings that ordinarily shall not be closed include the review, discussion, and evaluation of general preclinical and clinical test protocols and procedures for a class of drugs or devices; consideration of labeling requirements for a class of marketed drugs or devices; review of data and information on specific investigational or marketed drugs and devices that have previously been made public; presentation of any other data or information that is not exempt from public disclosure pursuant to the FACA, as amended; and, notably deliberative session to formulate advice and recommendations to the agency on matters that do not independently justify closing.

This notice is issued under section 10(a)(1) and (2) of the Federal Advisory Committee Act (5 U.S.C. App. 2), and FDA's regulations (21 CFR part 14) on advisory committees.

Dated: July 17, 1992.

David A. Kessler,

Commissioner of Food and Drugs.

[FR Doc. 92-17500 Filed 7-23-92; 8:45 am]

BILLING CODE 4160-01-F

National Institutes of Health Division of Research Grants; Meetings

Pursuant to Public Law 92-463, notice is hereby given of meetings of the Division of Research Grants Behavioral and Neuroscience Special Emphasis Panel.

These meetings will be open to the public to discuss administrative details relating to Special Emphasis Panel business for approximately one half hour at the beginning of each meeting. Attendance by the public will be limited to space available. These meetings will be closed thereafter in accordance with the provisions set forth in section 552b(c)(4) and 552b(c)(6), title 5, U.S.C. and section 10(d) of Public Law 92-463, for the review, discussion and evaluation of individual grant applications in the areas of the behavioral and neurosciences. These applications and the discussions could reveal confidential trade secrets or commercial property such as patentable material and personal information concerning individuals associated with the applications, the disclosure of which would constitute a clearly unwarranted invasion of personal privacy.

The Office of Committee Management, Division of Research Grants, Westwood Building, National Institutes of Health, Bethesda, Maryland 20892, telephone 301-496-7534, will furnish summaries of the meetings and rosters of panel members. Substantive program information may be obtained from each Scientific Review Administrator whose telephone number is provided. Since it is necessary to announce meetings well in advance of the actual meeting, it is suggested that anyone planning to attend a meeting contact the Scientific Review Administrator to confirm the exact date, time and location.

Meetings to Review Individual Grant Applications in the Areas of the Behavioral and Neurosciences:

Scientific Review Administrator: Dr. Leonard Jakubczak, (301) 496-7251.
Date of Meeting: August 3, 1992.
Place of Meeting: Marriott Hotel, Bethesda, MD.
Time of Meeting: 8:30 a.m.

Scientific Review Administrator: Dr. Leonard Jakubczak, (301) 496-7251.
Date of Meeting: August 4, 1992
Place of Meeting: Westwood Bldg., Room 325C, NIH, Bethesda, MD (Telephone Conference)
Time of Meeting: 2 p.m.

Scientific Review Administrator: Dr. Leonard Jackubczak, (301) 496-7251.
Date of Meeting: August 5, 1992.
Place of Meeting: Westwood Bldg., Room 325C, NIH, Bethesda, MD (Telephone Conference).
Time of Meeting: 2 p.m.

Scientific Review Administrator: Dr. Leonard Jakubczak, (301) 496-7251.
Date of Meeting: August 6, 1992.
Place of Meeting: Westwood Bldg., Room 325C, NIH, Bethesda, MD (Telephone Conference).
Time of Meeting: 2 p.m.

Scientific Review Administrator: Ms. Carol Campbell, (301) 496-7109
Date of Meeting: August 11, 1992.
Place of Meeting: Westwood Bldg., Room 306B, NIH, Bethesda, MD. (Telephone Conference)
Time of Meeting: 8:00 a.m.

Scientific Review Administrator: Dr. Robert Weller, (301) 496-7906.
Date of Meeting: August 17, 1992.
Time of Meeting: 9:00 a.m.

(Catalog of Federal Domestic Assistance Program Nos. 93.306, 93.333, 93.337, 93.393-93.396, 93.837-93.844, 93.846-93.878, 93.892, 93.893, National Institutes of Health, HHS)

Dated: July 17, 1992.

Susan K. Feldman,

Committee Management Officer, NIH.

[FR Doc. 92-17588 Filed 7-23-92; 8:45 am]

BILLING CODE 4140-01-M

Public Health Service

Agency Forms Submitted to the Office of Management and Budget for Clearance

Each Friday the Public Health Service (PHS) publishes a list of information collection requests it has submitted to the Office of Management and Budget (OMB) for clearance in compliance with the Paperwork Reduction Act (44 U.S.C. chapter 35). The following requests have been submitted to OMB since the list was last published on Friday, July 10, 1992.

(Call PHS Reports Clearance Officer on 202-690-7100 for copies of requests)

1. Low-Dose Oral Contraceptives and Cardiovascular Disease—New—An accurate assessment of the risk of cardiovascular diseases for users of low-dose oral contraceptives is not available. The generation of this information will help women and their physicians to make sound decisions about contraceptive use and safety. Information will be obtained from surrogate respondents for cases and controls in a case-control study. *Respondents:* Individuals and households; *Number of Respondents:* 147; *Number of Responses Per Respondent:* 1; *Average Burden Per Response:* 1.09 hours; *Estimated Annual Burden:* 160 hours.

2. Medical Device Conformance Assessment to Voluntary Standards—0910-0253—The conformance assessment program will evaluate the extent to which certain high-priority medical devices adhere to voluntary standards, and will assess the impact of these on the safety and effectiveness of these devices. Conformance will be accomplished by review and analysis of information obtained from manufacturers. *Respondents:* Businesses or other for-profit; Small businesses or organizations; *Number of Respondents:* 100; *Number of Responses Per Respondent:* 1; *Average Burden Per Response:* 4 hours; *Estimated Annual Burden:* 400 hours.

3. Good Laboratory Practice (GLP) Regulations for Nonclinical Studies—21 CFR part 58—0910-0119—The GLP Regulations are intended to assure the quality and integrity of the safety data submitted to FDA in support of the approval of regulated products. The required information will help assure that only safe products are approved for marketing. *Respondents:* Businesses or other for-profit, Federal agencies or employees, Non-profit institutions, Small businesses or organizations.

Title	Number of respondents	Number of responses per respondent	Average burden per respondent
Personnel—Recordkeeping (Training, experience, etc.) 21 CFR 58.29(b)	400	20	0.21
Quality Assurance—Reporting 21 CFR 58.35 (b)(7)	400	1	60.25
Quality Assurance Recordkeeping (Maintenance of testing facility 21 (CFR 58.35 (b)(1) & (2) & (c) records)	400	271	3.36
Equipment Maintenance—Recordkeeping (maintenance/calibration of equipment) 21 CFR 58.63 (b)(c)	400	250	5.5
SOP's Recordkeeping Written sops to insure integrity of study data—21 CFR 58.81	400	300	.14
Animal Care—Recordkeeping Treatment/documentation of feed/water analyses 21 CFR 58.90 (c)(d)	400	57	.14
Test/Control Characterization—Reporting Test/Control article stability. 21 CFR 58.105 (a) & (b)	400	5	11.8
Test/Control Article Handling Recordkeeping Receipt/distribution of records on batches—21 CFR 58.107(d)	400	1	4.25
Mix of Articles—Reporting Testing of mixtures. 21 CFR 58.113(a)	400	15.4	6.8
Protocol—Reporting Description of objectives/methods for study. 21 CFR 58.120	400	15.4	32.7
Study Results—Reporting 21 CFR 58.185—Final Report	400	60.2	27 6

Title	Number of respondents	Number of responses per respondent	Average burden per respondent
Retention of Records—Recordkeeping 21 CFR 58.195	400	250	3.9

Estimated Total Annual Burden: $1,739,000

4. National Practitioner Data Bank for Adverse Information on Physicians and Other Health Care Practitioners—Regulations and Forms (45 CFR part 60)—0915-0216—Data identifying incompetent, unprofessional, and unethical physicians and health practitioners will be shared with licensing boards, professional societies, and selected health care providers. These data will be used to maintain and improve health care and will be obtained from insurers, licensure boards, peer review committees, hospitals and other providers.

Respondents: Individuals or households, State or local governments; Businesses or other for-profit, Federal agencies or employees, Non-profit institutions, Small businesses or organizations.

Title	Number of Respondents	Number of Responses Per Respondent	Average burden Per Response
60.6(a)-Reporting Corrections of Errors and Omissions	250	12.46	.5
60.6(b)-Revisions of Original Reports	350	1	.5
60.7(b)-Reporting Medical Malpractice Payments	1800	9.72	1
60.8(b)-Reporting Licensure Action of Boards	125	18.8	1
60.9(a)(3)-Reporting Clinical Privilege and Professional Society Membership Actions.	920	1	1
60.9(a)(3) Submission of Reports from 60.9(a)(3) Through the Boards.	125	7.36	.08
60.9(c)-Request for Hearings by Entities Found in Non-compliance.	10	1	8
60.10(a)(1)-Disclosure to Hospitals' Request Information on Applicants.	7200	13.33	.06/name
60.10(a)(2)-Biannual Disclosure to Hospitals	6000	97.48	.08/name
60.11(a)(1)-Other Disclosure to Hospitals	Subsumed under section 60.10(a)(1)		
60.11(a)(2)-Disclosure to Practitioners	5050	1	.25
60.11(a)(3)-Disclosure to Licensure Boards	45	145	.08
60.11(a)(4)-Disclosure to Nonhospital Entities which Grant Privileges.	2220	22.11	.06
60.11(a)(5)-Disclosure to Attorneys	10	1	.25
60.11(a)(6)-Disclosure to Practitioners	Subsumed under Sections 60.10(a)(1) and 60.11(a)(4)		
60.11(a)(7)-Disclosure of Aggregate Information	100	1	1
60.14(b)-Filing Disputes with the Data Bank	1360	1	1
60.14(b)-Filing Disputes with the Secretary	90	1	8

Estimated Total Annual Burden: 87,475 *Desk Officer:* Shannah Koss.

Written comments and recommendations for the proposed information collections should be sent within 30 days of this notice directly to the OMB Desk Officer designated above at the following address: Human Resource and Housing Branch, New Executive Office Building, room 3002, Washington, DC 20503.

Dated: July 17, 1992.

Phyllis M. Zucker,

Acting Director, Office of Health, Planning and Evaluation.

[FR Doc. 92-17334 Filed 7-23-92; 8:45 am]

BILLING CODE 4160-17-M

Agency for Health Care Policy and Research; Statement of Organization, Functions and Delegations of Authority

Part H, Public Health Service (PHS) Chapter HP (Agency for Health Care Policy and Research), of the Statement of Organization, Functions and Delegations of Authority for the Department of Health and Human Services (55 FR 12286-89, April 2, 1990, as amended at 56 FR 55677-8, October 29, 1991) is amended to revise the functional statement of the Division of Information and Publications and retitle it as the Division of Communications, in the Center for Research Dissemination and Liaison.

Agency for Health Care Policy and Research

Under Section HP-20, Functions, following the statement of the *Division of Education, Evaluation, and Demonstration (HPG2), delete the title and statement of the Division of Information and Publications (HPG3)* and *add the following:*

Division of Communications (HPG3). Ensures that findings and information from research conducted or funded by AHCPR are made promptly available to the public and private sectors, in forms useful to the recipients. Responsible for disseminating AHCPR's many and varied information products. Specifically:

(1) Prepares documents that are scientifically sound and appropriately targeted to various audiences;

(2) Edits and controls the review and publication of all AHCPR documents:

(3) Maintains AHCPR's Information Resources Center;

(4) Ensures proper clearance procedures consistent with Departmental rules;

(5) Provides interface with the Government Printing Office and National Technical Information Service;

(6) Organizes and conducts AHCPR's exhibits program and provides conference support services to the program staff;

(7) Prepares and controls graphics, printing and visual aids production for AHCPR;

(8) Analyzes AHCPR audiences and information needs, and recommends new outreach programs and information products that meet AHCPR's scientific information and dissemination goals;

(9) Works with and assists the National Library of Medicine in efforts to improve the availability of health services information to the public;

(10) Carries out the public affairs and liaison activities for AHCPR;

(11) Develops and implements marketing plans for the clinical practice guidelines being developed under the auspices of AHCPR and disseminates information emanating from the Patient Outcomes Research Team projects;

(12) Markets the extramural and intramural research of AHCPR;

(13) Implements AHCPR's Freedom of Information Act activities;

(14) Handles AHCPR's media relations;

(15) Manages ANCPR's publications clearinghouse and 800 number; and

(16) Develops and implements new methods of dissemination to meet on-going needs of AHCPR's target audiences including computer-based modes of distribution.

Dated: July 15, 1992.

J. Jarrett Clinton,

Administrator.

[FR Doc. 92-17433 Filed 7-23-92; 8:45 am]

BILLING CODE 4160-90-M

Social Security Administration

Agency Forms Submitted to the Office of Management and Budget for Clearance

Each Friday the Social Security Administration publishes a list of information collection packages that have been submitted to the Office of Management and Budget (OMB) for clearance in compliance with Public Law 96-511, The Paperwork Reduction Act. The following clearance packages have been submitted to OMB since the last list was published in the **Federal Register** on July 2, 1992.

(Call Reports Clearance Officer on (410) 965-4149 for copies of package)

1. *Representative Payee Evaluation Report*—0960-0069. The information on form SSA-624 is used by the Social Security Administration to determine the continuing suitability of an individual or institution to serve as a representative payee for a beneficiary. The respondents are representative payees who failed to return form SSA-623 or who did not complete that form properly.

Number of Respondents: 422,533.

Frequency of Response: 1.

Average Burden Per Response: 30 minutes.

Estimated Annual Burden: 211,627 hours.

2. *Statement of Care and Responsibility for Beneficiary*—0960-0119. The information on form SSA-788 is used by the Social Security Administration to evaluate the concern that a potential payee shows toward the beneficiary. The respondents are individuals or institutions who have custody of a beneficiary for whom someone else has filed to be representative payee.

Number of Respondents: 130,000.

Frequency of Response: 1.

Average Burden Per Response: 10 minutes.

Estimated Annual Burden: 22,667 hours.

3. *Notice of Proposed Rulemaking-Payments for Vocational Rehabilitation (VR) Serivces*—0960-NEW. The informational collected by these proposed regulations will be used by the Social Security Administration to more effectively administer our VR programs. The respondents are State VR agencies and alternate providers who offer services to SSA beneficiaries.

Number of Respondents: 80.

Frequency of Response: On occasion.

Average Burden Per Response: From 30 minutes to 12 hours, depending on proposed rule.

Estimated Annual Burden: 15,030 hours for first year, 14,070 hours annually after that.

OMB Desk Officer: Laura Oliven.

Written comments and recommendations regarding these information collections should be sent directly to the appropriate OMB Desk Officer designated above at the following address: OMB Reports Management Branch, New Executive Office Building, room 3208, Washington, DC 20503.

Dated: July 17, 1992.

Judy Hasche,

Acting Reports Clearance Officer Social Security Administration.

[FR Doc. 92-17436 Filed 7-23-92; 8:45 am]

BILLING CODE 4190-29-M

DEPARTMENT OF HOUSING AND URBAN DEVELOPMENT

Office of the Assistant Secretary for Community Planning and Development

[Docket No. N-92-1917; FR-2934-N-88]

Federal Property Suitable as Facilities To Assist the Homeless

AGENCY: Office of the Assistant Secretary for Community Planning and Development, HUD.

ACTION: Notice.

SUMMARY: This Notice identifies unutilized, underutilized, excess, and surplus Federal property reviewed by HUD for suitability for possible use to assist the homeless.

ADDRESSES: For further information, contact James N. Forsberg, room 7262, Department of Housing and Urban Development, 451 Seventh Street SW., Washington, DC 20410; telephone (202) 708-4300; TDD number for the hearing- and speech-impaired (202) 708-2565 (these telephone numbers are not toll-free), or call the toll-free Title V information line at 1-800-927-7588.

SUPPLEMENTARY INFORMATION: In accordance with 56 FR 23789 (May 24, 1991) and section 501 of the Stewart B. McKinney Homeless Assistance Act (42 U.S.C. 11411), as amended, HUD is publishing this Notice to identify Federal buildings and other real property that HUD has reviewed for suitability for use to assist the homeless. The properties were reviewed using information provided to HUD by Federal landholding agencies regarding unutilized and underutilized buildings and real property controlled by such agencies or by GSA regarding its

inventory of excess or surplus Federal property. This Notice is also published in order to comply with the December 12, 1988 Court Order in *National Coalition for the Homeless* v. *Veterans Administration*, No. 88-2503 (D.D.C.).

Properties reviewed are listed in this Notice according to the following categories: Suitable/available, suitable/unavailable, suitable/to be excess, and unsuitable. The properties listed in the three suitable categories have been reviewed by the landholding agencies, and each agency has transmitted to HUD: (1) Its intention to make the property available for use to assist the homeless, (2) its intention to declare the property excess to the agency's needs, or (3) a statement of the reasons that the property cannot be declared excess or made available for use as facilities to assist the homeless.

Properties listed as suitable/available will be available exclusively for homeless use for a period of 60 days from the date of this Notice. Homeless assistance providers interested in any such property should send a written expression of interest to HHS, addressed to Judy Breitman, Division of Health Facilities Planning, U.S. Public Health Service, HHS, room 17A-10, 5600 Fishers Lane, Rockville, MD 20857; (301) 443-2265. (This is not a toll-free number.) HHS will mail to the interested provider an application packet, which will include instructions for completing the application. In order to maximize the opportunity to utilize a suitable property, providers should submit their written expressions of interest as soon as possible. For complete details concerning the processing of applications, the reader is encouraged to refer to the interim rule governing this program, 56 FR 23789 (May 24, 1991).

For properties listed as suitable/to be excess, that property may, if subsequently accepted as excess by GSA, be made available for use by the homeless in accordance with applicable law, subject to screening for other Federal use. At the appropriate time, HUD will publish the property in a Notice showing it as either suitable/available or suitable/unavailable.

For properties listed as suitable/unavailable, the landholding agency has decided that the property cannot be declared excess or made available for use to assist the homeless, and the property will not be available.

Properties listed as unsuitable will not be made available for any other purpose for 20 days from the date of this Notice. Homeless assistance providers interested in a review by HUD of the determination of unsuitability should call the toll free information line at 1-800-927-7588 for detailed instructions or write a letter to James N. Forsberg at the address listed at the beginning of this Notice. Included in the request for review should be the property address (including zip code), the date of publication in the **Federal Register**, the landholding agency, and the property number.

For more information regarding particular properties identified in this Notice (*i.e.*, acreage, floor plan, existing sanitary facilities, exact street address), providers should contact the appropriate landholding agencies at the following addresses: GSA: Ronald Rice, Federal Property Resources Services, GSA, 18th and F Streets NW., Washington, DC 20405; (202) 501-0067; Dept. of Transportation: Ronald D. Keefer, Director, Administration Services & Property Management, DOT, 400 Seventh St. SW., room 10319, Washington, DC 20590; (202) 366-4246; HHS: Judy Breitman, Chief, Real Property Branch, Dept. of HHS, Div. of Health Facilities Planning, Rm. 17A10, 5600 Fishers Lane, Rockville, MD 20857; (301) 443-2265; Corps of Engineers: Bob Swieconek, Headquarters, Army Corps of Engineers, Attn: CERE-MM, room 4224, 20 Massachusetts Avenue NW., Washington, DC 20314-1000; (202) 272-1750; (These are not toll-free numbers).

Dated: July 17, 1992.

Paul Roitman Bardack,

Deputy Assistant Secretary for Economic Development.

TITLE V, FEDERAL SURPLUS PROPERTY PROGRAM, FEDERAL REGISTER REPORT FOR 07/24/92

Suitable/Available Properties

Land (by State)

Kansas

Portion of VA Hospital Reserv.
2111 Southwest Randolph Street
Topeka Co: Shawnee KS 66603-
Landholding agency: GSA
Property number: 549220006
Status: Excess
Comment: 0.806 acre, utility easements, most recent use—recreation.
GSA number: 7-GR-KS-419-I

Montana

0.01 acre, Fort Peck Lake Proj Co: Valley MT
Location: Twp. 27 north, RNG 41 east, Section 33, E/2SE/4NW/4NE/4
Landholding agency: COE
Property number: 319220002
Status: Excess
Comment: 0.01 acre, small triangular parcel, rough/steep terrain.

0.05 acre, Fort Peck Lake Proj Co: Valley MT
Location: Twp 27 north, RNG 41 east, Section 33, E/2SE/4NW/4NE/4
Landholding agency: COE
Property number: 319220003
Status: Excess
Comment: 0.05 acre, narrow strip next to highway, steep/rough terrain

122.60 acres
Fort Peck Lake Project Co: McCone MT
Location: Twp 26 north, RNG 42 east, Section 4, Lot 3, SW/4NE/4SE/4NW/4
Landholding agency: COE
Property number: 319220004
Status: Excess
Comment: 122.60 acres, rough & rugged terrain, grazing allotment administered by Bureau of Land Management

120 acres, Fort Peck Lake Proj Co: McCone MT
Location: Twp 21 north, RNG 43 east, Section 34, N/2NE/4, Section 35, NW/4NW/4
Landholding agency: COE
Property number: 319220005
Status: Unutilized
Comment: 120.00 acres, rough & rugged terrain

Suitable/Unavailable Properties

Buildings (by State)

Guam

Bldg. 99, Loran Station—C
Barrigada GU 96913-
Landholding agency: DOT
Property number: 879220002
Status: Excess
Comment: 3,960 sq. ft. concrete block transmitting station with tower

Suitable/To Be Excessed

Buildings (by State)

New Mexico

Bldg. 234, LPN Service Bldg.
1015 Indian School Road
Albuquerque Co: Bernalillo NM 87102-
Landholding number: HHS
Property number: 579220001
Status: Unutilized
Comment: 3,500 sq. ft., 1 story, limited utilities, most recent use—maintenance shop; and .405 acre parking lot (unpaved), secured area with alternate access.

[FR Doc. 92-17330 Filed 7-23-92; 8:45 am]

BILLING CODE 4210-29-M

DEPARTMENT OF THE INTERIOR

Bureau of Indian Affairs

Fort Hall Irrigation Project, ID

AGENCY: Bureau of Indian Affairs, Department of the Interior.

ACTION: Notice of operation and maintenance rates.

SUMMARY: The purpose of this notice is to change the assessment rates for operating and maintaining the Fort Hall Irrigation Project for 1992 and subsequent years. The assessment rates are based on a prepared estimate of the cost of normal operation and maintenance of the irrigation project. Normal operation and maintenance is

defined as the average per acre cost of all activities involved in delivering irrigation water, including maintaining pumps and other facilities.

EFFECTIVE DATE: January 13, 1992.

FOR FURTHER INFORMATION CONTACT: Portland Area Director, Portland Area Office, Bureau of Indian Affairs, 911 NE. 11th Avenue, Portland, Oregon 97232-4169, telephone (503) 231-6750.

SUPPLEMENTARY INFORMATION: On December 12, 1991 in the **Federal Register**, Volume 56, No. 239, Page 64797, there was published a notice of proposed assessment rates and related provisions on the Fort Hall Irrigation Project for Calendar year 1992 and subsequent years until further notice.

Interested persons were given 30 days in which to submit written comments, views or arguments regarding the proposed rates and related provisions. During this period no comments, suggestions, or objections were submitted. Therefore, the assessment rates and related provisions as set forth below are adopted effective 30 days after date of publication in the **Federal Register**. Operation and maintenance rates and related information are published under the authority delegated to the Assistant Secretary—Indian Affairs by the Secretary of the Interior in 230 DM 1 and delegated by the Assistant Secretary—Indian Affairs to the Area Director in BIAM 3.

This notice is given in accordance with § 171.1(e) of part 171, subchapter H, chapter I, of title 25 of the Code of Federal Regulations, which provide for the Area Director to fix and announce the rates for annual operation and maintenance assessments and related information of the Fort Hall Irrigation Project for Calendar Year 1992 and subsequent years. This notice is proposed pursuant to the authority contained in the Acts of March 1, 1907 (34 Stat. 1024), and August 31, 1954 (68 Stat. 1026).

The purpose of this notice is to announce an increase in the Fort Hall Project assessment rates proportionate with actual operation and maintenance costs. The proposed assessment rates for 1992 will amount to an increase of 3% for the Fort Hall unit and a 2% increase for the Michaud Unit.

Fort Hall Irrigation Project

Regulations and Charges

Administration

The Fort Hall Irrigation Project, which consists of the Fort Hall Unit including the ceded area south of the Fort Hall Reservation, the Michaud Unit and the Minor Units on the Fort Hall Indian reservation, Idaho, is administered by the Bureau of Indian Affairs. The Superintendent of the Fort Hall Agency is the Officer-in-Charge and is fully authorized to carry out and enforce the regulations, either directly or through employee designated by him. The general regulations are contained in part 171, Operation and Maintenance, title 25—Indians, Code of Federal Regulations.

Irrigation Season

Water will be available for irrigation purposes from May 1 to September 30 of each year. These dates may be varied by 15 days depending on weather conditions and the necessity for doing maintenance work.

Methods of Irrigation

Where soil, topography, and other physical conditions are unfavorable for surface irrigation, and the project facilities are designed to deliver water to farm units for sprinkler irrigation, the Officer-In-Charge may limit deliveries to this type of irrigation.

Distribution and Apportionment of Water

(a) *Delivery:* Water for irrigation purposes will be delivered throughout the irrigation season by either the continuous flow or rotation method at the discretion of the Officer-in-Charge. If during a time when delivery is by the rotation method, a water user desires to loan his turn to another eligible water user, he shall notify either the watermaster or the ditch rider who may permit such exchange, if feasible.

(b) *Preparation and Submission of Water Schedule:* If the decision of the Officer-in-Charge is to deliver water by the rotation method, the watermaster will assist the water users on each lateral in preparing a rotation schedule should they choose to get together and prepare the schedule. In cases where the water users fail to exercise this right before March 1, the watermaster will prepare the schedule which shall be final for the season. Owners of 120 acres or more in one farm unit may elect between the continuous flow and rotation method of delivery, provided such choice does not interfere with delivery to other lands served by the lateral.

(c) *Application for Deliveries of Irrigation Water:* Request for water changes will be made at least 24 hours in advance. Not more than one change will be made per day. Changes will be made only during the ditch rider's regular tour. Pump shut-down, regardless of duration, without the required notice will result in the delivery being closed and locked. Water users will change their sprinkler lines without shutting off more than one-half of their lines at one time. Sudden and unexpected changes in ditch flow results in operating difficulties and waste of water.

Duty of Water

Depending upon available supplies of water for each unit of the Project, the duty of water is based on the delivery to the farm unit of 3.5 acre-feet of water per acre per irrigation season. This duty of water may be varied at the discretion of the Officer-in-Charge depending on supplies available, but each irrigable acre shall be entitled to its pro-rate share of the total water supply.

Charges

Bills covering irrigation charges will be issued to the owner of record taken from the Bannock, Bingham or Power County records as of December 31, preceding the due date. In the case of Indian-owned land leased to a non-Indian, when an approved lease contract is on file with the superintendent of the Fort Hall Agency, operation and maintenance charges will be billed to the lessee of record.

Basic and Other Water Charges

(a) The annual basic water charges for the operation and maintenance of the Fort Hall Irrigation Project lands in non-Indian ownership, and assessable Indian-owned lands leased to a non-Indian or a non-member of the Shoshone-Bannock Tribes of the Fort Hall Indian Reservation, Idaho, are fixed for the Calendar Year 1992 and subsequent years until further notice as follows:

(1) Fort Hall Unit basic rate.....$20.00 per acre
(2) Michaud Unit basic rate.....$25.50 per acre
Additional rate for sprinkler when pressure is supplied by project...$12.00 per acre
(3) Minor Units basic rates.....$14.00 per acre

(b) The minimum bill issued for any tract will be $25.00.

Payments

The water charges become due on April 1 of each year and are payable on or before that date. To all assessments on lands in non-Indian ownership, and lands in Indian ownership which do not qualify for free water, remaining unpaid on or after July 1 following the due date shall be considered delinquent. No water shall be delivered to any of these lands until all irrigation charges have been paid.

Interest and Penalty Fees

Interest and penalty fees will be assessed, where required by law, on all delinquent operation and maintenance assessment charges as prescribed in the Code of Federal Regulations, title 4, part 102, Federal Claims Collection Standards; and 42 BIAM Supplement 3, part 3.8 Debt Collection Procedures.

Assessments on Indian Owned Land

When land owned by members of the Shoshone-Bannock Tribes of the Fort Hall Indian Reservation is first leased to non-Indians or non-members of the tribe, and an approved lease is on file at the Fort Hall Agency, the leased land is not subject to operation and maintenance assessments for three years. The three years the land is not subject to assessment need not run consecutively. When land has been leased for a total of three years, the land, when under lease to non-Indians or non-members of the tribe, is subject to operation and maintenance assessments the same as lands in non-Indian ownership and lands owned by non-members of the tribe within the project. (See Solicitor's Opinion M 28701, approved September 24, 1936, and the instructions of September 19, 1938, and instructions of December 1, 1938.)

Stanley Speaks,

Portland Area Director.

[FR Doc. 92-17461 Filed 7-23-92; 8:45 am]

BILLING CODE 4310-02-M

Bureau of Land Management

[MT-060-92-4990-15]

Environmental Impact Statement; Liberty County, MT

AGENCY: Notice of intent to prepare an environmental impact statement (EIS).

ACTION: Pursuant to section 102(2)(C) of the National Environmental Policy Act of 1969, the Bureau of Land Management, Lewistown District, will prepare an EIS on the impacts of a proposal by Manhattan Minerals to perform hardrock mineral exploration work on East Butte, in the Sweet Grass Hills, Liberty County, Montana. The project is located in the Tootsie Creek drainage of East Butte, in portions of Sections 10, 20 and 30, T. 36 N., R. 5 E. The draft EIS is scheduled for completion by November, 1992.

DATES: Written comments on the scope of alternatives and impacts will be accepted until September 1, 1992.

ADDRESSES: Comments should be sent to the District Manager, Bureau of Land Management, Lewistown District Office, P.O. Box 1160, Lewistown, MT 59457-1160.

FOR FURTHER INFORMATION CONTACT: Scott Haight, EIS Team Lead, Lewistown District Office, P.O. Box 1160, Lewistown, MT 59457-1160, (406) 538-7461.

SUPPLEMENTARY INFORMATION: Manhattan Minerals has submitted to the Lewistown District Office, Bureau of Land Management (BLM) and the Montana Department of State Lands, a proposal to perform hardrock mineral exploration work on East Butte in the Sweet Grass Hills. The BLM considered this proposed Plan of Operations in accordance with federal regulations 43 CFR Part 3809 and prepared an Environmental Assessment (EA) to: (1) Analyze the impacts of the proposed action and alternatives on the environment; (2) determine whether the impacts are unnecessary or undue; (3) develop measures to mitigate impacts; and (4) provide a basis for determining whether impacts after mitigation are significant and require an EIS. In reviewing the EA, the authorized officer determined that the proposed action could have a significant impact on the quality of the human environment with respect to Native American traditional cultural and religious resources, and cannot be approved until it is analyzed in an EIS. The EA process will become part of the scoping for the EIS.

Dated: July 13, 1992.

David L. Mari,

District Manager.

[FR Doc. 92-17452 Filed 7-23-92; 8:45 am]

BILLING CODE 4310-DN-M

(NV-050-91-4320-02)

Las Vegas District Advisory Council Meeting

AGENCY: Bureau of Land Management, Department of the Interior Notice is hereby given in accordance with Public Law 920463 that a meeting of the Bureau of Land Management, Las Vegas District Advisory Council will be held August 7, 1992, at 9 a.m. to 3 p.m. in the Las Vegas BLM District Office, Las Vegas, Nevada.

The meeting agenda will include:

1. Briefing on Draft of Resource Management Plan.

2. Wild Horse and Burro Program: Economic impacts to Las Vegas District Office and other districts.

3. Status Report: Viceroy Gold Corporation and California BLM State Office.

4. Multiple Use Public Land: How is an area designated as wilderness or recreational, and how are activities restricted on multiple use public land?

Advisory Council meetings are open to the public. Persons wishing to make oral statements to the Council must notify the District Manager, Bureau of Land Management, Las Vegas District, P.O. Box 26569, Las Vegas, Nevada 89126, prior to August 3, 1992.

Minutes of the meeting will be available, upon request, at the Las Vegas District Office on August 21, 1992.

Dated: July 7, 1992.

Colin P. Christensen,

Acting District Manager, Las Vegas, Nevada.

[FR Doc. 92-17443 Filed 7-23-92; 8:45 am]

BILLING CODE 4310-HC-M

[UT-050-02-4320-14]

Grazing Advisory Board; Meeting

AGENCY: Bureau of Land Management, Interior.

ACTION: District Grazing Advisory Board Meeting.

SUMMARY: The Richfield District Grazing Board will hold a meeting on August 27, 1992. The meeting will start at 10 a.m. in the District Office, 150 East 900 North, Richfield, Utah. The agenda will be:

1. RMP planning status—Henry Mountain Resource Area.
2. Project 2015.
3. AMP status—House Range and Henry Mountain Resource Areas.
4. Forage conditions—Shrub die-off.
5. Land exchange BLM/USFS—Sevier River Resource Area.
6. Status of FY 1992 projects.
7. Buffalo count—Henry Mountain Resource Area.
8. Proposed FY 1994 projects.

Interested persons may make oral statements to the Board between 1:15 p.m. and 2:15 p.m. or file written comments for the Board's consideration. Anyone wishing to make an oral statement must notify the District Manager, Bureau of Land Management, 150 East 900 North, Richfield, Utah 84701 (801-896-8221). For further information contact: Sheril Slack, District Range Conservationist at the above address.

Dated: July 17, 1992.

Neil Thomas,

Assistant District Manager, Administration.

[FR Doc. 92-17439 Filed 7-23-92; 8:45 am]

BILLING CODE 4310-DQ-M

[NM-060-4320-10 ADVB; 611]

Rosewell District Grazing Advisory Board Meeting

AGENCY: Bureau of Land Management, Interior.

ACTION: Roswell District Grazing Advisory Board Meeting.

SUMMARY: This notice sets forth the schedule and agenda of a forthcoming meeting of the Rosewell District Grazing Advisory Board.

DATES: Thursday, August 27, 1992, beginning at 10 a.m. A public comment period will be held following conclusion of the agenda.

LOCATION: BLM Rosewell District Office, 1717 West Second St., Roswell, New Mexico 88201.

FOR FURTHER INFORMATION CONTACT: Leslie M. Cone, District Manager, Bureau of Land Management, P.O. Box 1397, Rosewell, NM 88202-1397.

SUPPLEMENTARY INFORMATION: The agenda will consist of review and discussion of FY 93 Range Improvement Projects, DPC/RMP update, Monitoring Studies-status report, and Temporary Nonrenewable Policy. The meeting is open to the public. Interested persons may make oral statements to the Board during the public comment period or may file written statements. Anyone wishing to make an oral statement should notify the District Manager by August 24, 1992. Summary minutes will be maintained in the District Office and will be available for public inspection during regular business hours, within 30 days following the meeting. Copies will be available for the cost of duplication.

Dated: July 14, 1992.

Leslie M. Cone,

District Manager.

[FR Doc. 92-17456 Filed 7-23-92; 8:45 am]

BILLING CODE 4310-FB-M

[MT-030-4212-14]

Realty Action, Sale of Public Land, North Dakota

AGENCY: Bureau of Land Management, Interior.

ACTION: Realty Action, Sale of Public Land in North Dakota.

SUMMARY: The following lands have been found suitable for sale under section 203 of the Federal Land Policy and Management Act of 1976 (90 Stat. 2750, 43 U.S.C., 1713), at not less than the estimated fair market value (FMV). These tracts are unimproved grazing lands. The McLean County tract is normally submerged.

DATES: September 22, 1992.

ADDRESSES: 2933 Third Avenue West; Dickinson, North Dakota 58601.

FOR FURTHER INFORMATION CONTACT: William C. Monahan, Dickinson District Office, 701-225-9148.

SUPPLEMENTARY INFORMATION:

Parcel and Legal Description

Fifth Principal Meridian

NDM79623—T. 134 N., R. 78 W.,
Sec. 5: Lot 6, 12.83 acres, Emmons County, FMV $700.
NDM79624—T. 134 N., R. 78 W.,
Sec. 7: Lot 10, 17.80 acres, Emmons County, FMV $1300.
NDM79625—T. 149 N., R. 77 W.,
Sec. 2: Lot 7, 13.40 acres, Sheridan County, FMV $600.
NDM79626—T. 150 N., R. 77 W.,
Sec. 13: Lot 1, 17.70 acres, Sheridan County, FMV $1,050.
NDM79627—T. 150 N., R. 77 W.,
Sec. 20: Lot 1, 11.40 acres, and Lot 2, 9.50 acres, Sheridan County, FMV $1,050.
NDM79628—T. 150 N., R. 77 W.,
Sec. 35: Lot 2, 13.70 acres, Sheridan County, FMV $750.
NDM79629—T. 150 N., R. 86 W.,
Sec. 21: NESE, 40.0 acres, McLean County, FMV $50.

The lands described are hereby segregated from appropriation under the public land laws, including the mining laws, pending disposition of this action or 270 days from the date of publication of this Notice, whichever occurs first.

The lands will be offered for sale at public auction beginning at 10 a.m. MDT, on September 22, 1992, at 2933 Third Avenue West, Dickinson, North Dakota 58601. The sale will be by modified competitive procedures. Tract lessees or adjoining land owners must submit a bid the day of sale to retain preference rights. The sale will be by sealed bid only.

All sealed bids must be submitted to the BLM's Dickinson District Office at 2933 Third Avenue West, Dickinson, North Dakota 58601, no later than 4:30 p.m., MDT, on September 21, 1992. Bid envelopes must be marked on the left front corner with the parcel number and the sale date. Bids must be for not less than the appraised FMV specified in this Notice. Each sealed bid shall be accompanied by a certified check, postal money order, bank draft or cashier's check made payable to the United States Department of the Interior, BLM, for not less than 10 percent of the amount of the bid. Bids on unsold parcels will be opened each Tuesday after the date of the sale at 10 a.m., MDT, until the parcels are sold.

The term and conditions applicable to the sale are:

1. All minerals shall be reserved to the United States, together with the right to prospect for, mine, and remove the mineral. A more detailed description of this reservation, which will be incorporated in the patent document, is available for review at this office.

2. A right-of-way is reserved for ditches and canals constructed by the authority of the United States under the authority of the Act of August 30, 1890, (26 Stat. 291; 43 U.S.C. 945).

3. The patents will be subject to all valid existing rights including rights-of-way.

Federal law requires that all bidders must be U.S. citizens 18 years old or older, or in the case of corporations, be subject to the laws of any State of the U.S. Proof of these requirements must accompany the bid.

Under modified competitive sale procedures, an apparent high bid will be declared at the public auction. The apparent high bidder, lessees and adjoining land owners will be notified. Lessees and adjoining land owners will be given the right to meet the highest bid. Lessees and adjoining land owners will have five (5) working days from the date of the sale to exercise the preference consideration given to meet the high bid. Refusal or failure to meet the highest bid shall constitute a waiver of such bidding provisions. Once the qualified high bidder is determined, the balance of the purchase price shall be paid within 180 days of the date of the sale.

Detailed information concerning the sale, including the reservations, procedures for conditions of sale, and planning and environmental documents, is available at the Dickinson District Office, Bureau of land Management, 2933 Third Avenue West. Dickinson, North Dakota 58601.

Comments:

For a period of 45 days from the date of this Notice, interested parties may submit comments to the District Manager, Dickinson District, at the above address. In the absence of objections, this proposal will become the final determination of the Department of the Interior.

Dated: July 15, 1992.

Grace C. Tanaka,

Acting District Manager.

[FR Doc. 92-17448 Filed 7-23-92; 8:45 am]

BILLING CODE 4310-ON-M

[UT-060-02-4333-13]

Travel, Camping, Fire and Woodcutting Restrictions; Slickrock Emergency Planning Area

July 15, 1992.

AGENCY: Bureau of Land Management, Moab District, Grand Resource Area, Utah.

ACTION: Notice of travel, camping, fire and woodcutting restrictions on public land for the protection of natural and scenic resources.

SUMMARY: Pursuant to the regulations contained in 43 CFR 8364.1, the Bureau of Land Management is limiting motorized vehicle and mountain bike travel to designated roads and trails, and camping to designated campsites. Campfires will be restricted to fire grills and designated campfire rings. No woodcutting permits will be issued in the Slickrock Area and firewood collection in the Riverway will be limited to driftwood only. The restrictions will be in affect on approximately 5396 acres of Public Land in the Slickrock Emergency Action Area and 22,158 acres of Public Land within Utah's Colorado Riverway SRMA. The Slickrock Emergency Action Area includes those lands north and east of Moab, bordering the Sand Flats Road, that are situated south of the Negro Bill WSA and north of Mill Creek WSA. The western boundary of the area includes the Slickrock Trail and extends eastward to Little Spring. The Colorado Riverway extends 45.5 miles along Highway 128 from the bridge at Dewey, southwest along the Colorado River, to the potash plant at the western end of Highway 279; it also includes the lower section of Kane Creek Canyon. Travel and camping limitations include all lands and roads not marked with an open sign. A map of the area described above may be viewed in the Resource Area office. The limitation is necessary to prevent further deterioration of the areas' natural and scenic resources.

Personnel that are exempt from the area limitation include any Federal, State, or local officer, or member of any organized rescue or fire-fighting force in the performance of an official duty, or any person authorized by the Bureau.

DATES: This limitation is effective September 1, 1992 and shall remain in effect until rescinded by the authorized officer.

PENALTIES: Violators are subject to fines not to exceed $1,000 and/or imprisonment not to exceed 12 months.

Dated: July 15, 1992.

Kenneth V. Rhea,

District Manager.

[FR Doc. 92-17441 Filed 7-23-92; 8:45 am]

BILLING CODE 4310-DQ-M

[OR-943-4214-10; GP2-324; OR-16757)]

Termination of Proposed Withdrawal and Reservation of Land; Oregon

AGENCY: Bureau of Land Management, Interior.

ACTION: Notice.

SUMMARY: The United States Forest Service has canceled its application to withdraw 1,318 acres of National Forest System land in the Deschutes National Forest for the Metolius Research Natural Area. This action will terminate the proposed withdrawal.

DATES: July 24, 1992.

FOR FURTHER INFORMATION CONTACT: Donna Kauffman, BLM, Oregon State Office, P.O. Box 2965, Portland, Oregon 97208, 503-280-7162.

SUPPLEMENTARY INFORMATION: The notice of the United States Department of Agriculture, Forest Service application OR-16757 for the withdrawal was published as FR Doc. 76-31679 of the issue of October 29, 1976, and republished as FR Doc. 79-29220 of the issue of September 20, 1979. The purpose on the proposed withdrawal was to protect the Metolius Research Natural Area. The applicant agency has determined that the proposed withdrawal is no longer needed and has canceled the application in its entirety as to the following described land:.

Willamette Meridian

Deschutes National Forest

T. 12 S., R. 9 E.,

A tract of land within Secs. 25, 26, 34, 35, and 36, more particularly described as follows:

Beginning at a point 396 feet west of the quarter corner between Secs. 34 and 35, T. 12 S., R. 9 E.; Thence in a northerly direction parallel to and 100 feet east of the centerline of Road No. 113 to a point on the east-west line between Secs. 23 and 26, T. 12 S., R. 9 E.; Thence easterly along the line between Secs. 23 and 26 and between Secs. 24 and 25, T. 12 S., R. 9 E., to a point on the summit of Green Ridge approximately 1,000 feet west of the quarter corner between Secs. 24 and 25, T. 12 S., R. 9 E.; Thence in a southerly direction along the summit of Green Ridge to a point on the east-west line between Sec. 36, T. 12 S., R. 9 E., and Sec. 1, T. 13 S., R. 9 E., approximately 300 feet west of the quarter corner between said Sections; Thence in a westerly direction along said section line to the section corner common to Secs. 35 and 36, T. 12 S., R. 9 E., and Secs. 1 and 2, T. 13 S., R. 9 E; Thence in a northerly direction along the section line between Secs. 35 and 36, T. 12 S., R. 9 E., to the quarter corner common to said Sections; Thence in a westerly direction approximately 5,670 feet to point of beginning.

The area described contains approximately 1,318 acres in Jefferson County, Oregon.

The proposed withdrawal is hereby terminated in its entirety. The land involved has been previously relieved of the segregative effect of the above-referenced application.

Dated: July 14, 1992.

Champ C. Vaughn,

Acting Chief, Branch of Lands and Minerals Operations.

[FR Doc. 92-17449 Filed 7-23-92; 8:45 am]

BILLING CODE 4310-33-M

[OR-943-4214-11; GP2-328; OR-1070(WASH), et al.]

Proposed Continuation of Withdrawals; Washington

AGENCY: Bureau of Land Management, Interior.

ACTION: Notice.

SUMMARY: The U.S. Department of Interior, Bureau of Reclamation, proposes that all or portions of seven separate land withdrawals for the Yakima Project located within the Wenatchee National Forest be continued and requests that the lands involved remain closed to surface entry and mining.

FOR FURTHER INFORMATION CONTACT: Linda Sullivan, BLM Oregon State Office, P.O. Box 2965, Portland Oregon 97208, 503-280-7171.

SUPPLEMENTARY INFORMATION:

The Bureau of Reclamation proposes that the following identified land withdrawals be continued pursuant to section 204 of the Federal Land Policy and Management Act of 1976, 43 U.S.C. 1714. The following described lands are involved:

1. OR-1070(WASH), Public Land Order No. 4323 dated November 20, 1967, continue for 25 years. Yakima Project, 20 acres located in Sec. 14, T. 22 N., R. 11 E., W.M., in Kittitas County, approximately 10 miles northwest of Easton, Washington.

2. OR-22214(WASH), Secretarial Order dated November 27, 1946, continue for 35 years. Yakima Project, 160 acres located in Sec. 6, T. 13 N., R. 13 E., W.M., in Yakima County, approximately 40 miles northwest of Yakima, Washington.

3. OR-22220(WASH), Secretarial Order dated September 8, 1904, continue for 40 years. Yakima Project, 2,575.89 acres located

in Secs. 2 and 12, T. 21 N., R. 11 E., Secs. 14, 22, 26, and 34 T. 22 N., R. 11 E., Sec. 10, T. 21 N., R. 12 E., Secs. 8, 16, 18, 20, 28, and 32, T. 21 N., R. 14 E., and Sec. 32, T. 22 N., R. 14 E., W.M., in Kittitas County, approximately 36 to 50 miles northwest of Ellensburg, Washington.

4. OR-22240(WASH), Secretarial Order dated April 29, 1907, continue for 35 years. Yakima Project, 3,480.79 acres located in Secs. 1, 2, 3, 11, and 12, T. 13 N., R. 13 E., Sec. 36, T. 14 N., R. 13 E., Sec. 6, T. 13 N., R. 14 E., and Sec. 31, T. 14 N., R. 14 E., W.M., in Yakima County, approximately 40 miles northwest of Yakima, Washington.

5. OR-22241(WASH), Secretarial Order dated July 20, 1908, continue for 35 years. Yakima Project, 3,397.88 acres located in Secs. 1, 2, 11, 12, and 14, T. 13 N., R. 12 E., Sec. 4 to 11, inclusive, T. 13 N., R. 13 E., and Secs. 7 and 18, T. 13 N., R. 14 E., W.M., in Yakima County, approximately 40 to 50 miles northwest of Yakima, Washington.

6. OR-22431(WASH), Secretarial Order dated September 8, 1904, continue for 20 years. Yakima Project, 2,073.47 acres located in Secs. 6, 8, 16, 20, 22, 26, 28, and 34, T. 21 N., R. 13 E., and secs. 8, 20, and 32, T. 22 N., R. 13 E., W.M., in Kittitas County, approximately 2 miles northwest of Easton, Washington.

7. OR-22463(WASH), Secretarial Order dated December 22, 1905, continue for 25 years. Yakima Project, 40 acres located in Sec. 10, T. 21 N., R. 12 E., W.M., in Kittitas County, approximately 10 miles northwest of Easton, Washington.

The withdrawals currently segregate the lands from operation of the public land laws generally, including the mining laws. The Bureau of Reclamation requests no changes in the purpose or segregative effect of the withdrawals.

For a period of 90 days from the date of publication of this notice, all persons who wish to submit comments, suggestions or objections in connection with the proposed withdrawal continuations may present their views in writing to the undersigned officer at the address specified above.

The authorized officer of the Bureau of Land Management will undertake such investigations as are necessary to determine the existing and potential demand for the lands and their resources. A report will also be prepared for consideration by the Secretary of the Interior, the President and Congress, who will determine whether or not the withdrawals will be continued and if so, for how long. The final determination on the continuation of the withdrawals will be published in the **Federal Register**. The existing withdrawals will continue until such final determination is made.

Dated: July 15, 1992.

Champ C. Vaughan,

Acting Chief, Branch of Lands and Minerals Operations.

[FR Doc. 92-17444 Filed 7-23-92; 8:45 am]

BILLING CODE 4310-33-M

[OR-943-4214-10; GP2-326; OR-8761 (WASH)]

Termination of Proposed Withdrawal and Reservation of Lands; Washington

AGENCY: Bureau of Land Management, Interior.

ACTION: Notice.

SUMMARY: The United States Forest Service has canceled its application to withdraw 1,120 acres of National Forest System lands in the Gifford Pinchot and Snoqualmie National Forests for the extension of the White Pass Recreation Area. This action will terminate the proposed withdrawal.

DATES: July 24, 1992.

FOR FURTHER INFORMATION CONTACT: Donna Kauffman, BLM, Oregon State Office, P.O. Box 2965, Portland, Oregon 97208, 503-280-7162.

SUPPLEMENTARY INFORMATION: The notice of the United States Department of Agriculture, Forest Service application OR-8761(WASH) for the withdrawal was published as FR Doc. 71-19108 of the issue of December 30, 1971, as amended by FR Doc. 80-29765 of the issue of September 26, 1980. The purpose of the proposed withdrawal was to protect the extension of the White Pass Recreation Area. The applicant agency has determined that the proposed withdrawal is no longer needed and has canceled the application in its entirety as to the following described lands:

Willamette Meridian

Snoqualmie and Gifford Pinchot National Forests

T. 13 N., R. 11 E., unsurveyed,
Sec. 1, S½NW¼;
Sec. 2, S½NE¼;
Sec. 10;
Sec. 11, S½S½;
Sec. 12, S½S½.

The areas described aggregate approximately 1,120 acres in Lewis and Yakima Counties, Washington.

The proposed withdrawal is hereby terminated in its entirety. The lands involved have been previously relieved of the segregative effect of the above-referenced application.

Dated: July 14, 1992.

Champ C. Vaughan,

Acting Chief, Branch of Lands and Minerals Operations.

[FR Doc. 92-17445 Filed 7-23-92; 8:45 am]

BILLING CODE 4310-33-M

[OR-943-4214-10; GP2-327; OR-48510 (Wash))]

Proposed Withdrawal and Opportunity for Public Meeting; Washington

AGENCY: Bureau of Land Management, Interior.

ACTION: Notice.

SUMMARY: The U.S. Department of Agriculture, Forest Service, proposes to withdraw 1,750 acres of National Forest System lands to protect the recreational and visual resources of the White Pass ski area in the Snoqualmie and Gifford Pinchot National Forests. This notice closes the lands for up to two years from mining. The lands will remain open to mineral leasing.

DATES: Comments and requests for a public meeting must be received by October 22, 1992.

ADDRESSES: Comments and meeting requests should be sent to the Oregon State Director, BLM, P.O. Box 2965, Portland, Oregon 97208-2965.

FOR FURTHER INFORMATION CONTACT: Donna Kauffman, BLM, Oregon State Office, 503-280-7162.

SUPPLEMENTARY INFORMATION: On June 9, 1992, the U.S. Department of Agriculture, Forest Service, filed an application to withdraw the following described National Forest System lands from location and entry under the United States mining laws (30 U.S.C. Ch. 2) subject to valid existing rights:

Willamette Meridian

Snoqualmie and Gifford Pinchot National Forests

T. 13 N., R. 11 E., unsurveyed,
Sec. 1, that portion of the N½ lying northerly of the withdrawal for State Highway 14 (PLO 2434);
Sec. 2, that portion of the N½ lying outside the William O. Douglas Wilderness Area;
Sec. 10, that portion of the E½ lying southerly of the withdrawal for State Highway 14 (PLO 2434);
Sec. 11, S½S½;
Sec. 12, that portion of the S½SW¼ lying outside the Goat Rocks Wilderness Area;
Sec. 14, that portion lying outside the Goat Rocks Wilderness Area;
Sec. 15, that portion lying outside the Goat Rocks Wilderness Area;
Sec. 22, that portion lying outside the Goat Rocks Wilderness Area;

Sec. 23, that portion lying outside the Goat Rocks Wilderness Area.
T. 14 N., R. 11 E., unsurveyed,
Sec. 35, that portion lying outside the William O. Douglas Wilderness Area;
Sec. 36, those portions of the S½SW¼ and SW¼SE¼ lying outside the William O. Douglas Wilderness Area;

The areas described aggregate approximately 1,750 acres in Lewis and Yakima Counties, Washington.

The purpose of the proposed withdrawal is to protect the recreational and visual resources of the White Pass ski area.

For a period of 90 days from the date of publication of this notice, all persons who wish to submit comments, suggestions, or objections in connection with the proposed withdrawal may present their views in writing to the State Director at the address indicated above.

Notice is hereby given that an opportunity for a public meeting is afforded in connection with the proposed withdrawal. All interested parties who desire a public meeting for the purpose of being heard on the proposed withdrawal must submit a written request to the State Director at the address indicated above within 90 days from the date of publication of this notice. Upon determination by the authorized officer that a public meeting will be held, a notice of the time and place will be published in the **Federal Register** at least 30 days before the scheduled date of the meeting.

The application will be processed in accordance with the regulations set forth in 43 CFR part 2300.

For a period of two years from the date of publication of this notice in the **Federal Register**, the lands will be segregated as specified above unless the application is denied or canceled or the withdrawal is approved prior to that date. The sites will be fenced to prevent other uses being of this area.

Dated: July 14, 1992.

Champ C. Vaughan

Acting Chief, Branch of Lands and Minerals Operations

[FR Doc. 92-17446 Filed 7-23-92; 8:45 am]

BILLING CODE 4310-33-M

Bureau of Mines

Information Collection Submitted to the Office of Management and Budget for Review Under the Paperwork Reduction Act

A Request extending the collection of information listed below has been submitted to the Office of Management and Budget for approval under the provisions of the Paperwork Reduction Act (44 U.S.C. chapter 35). Copies of the proposed collection of information and related forms and explanatory material may be obtained by contacting the Bureau's clearance officer at the phone number listed below. Comments and suggestions on the requirement should be made within 30 days directly to the Bureau clearance officer and to the Office of Management and Budget, Paperwork Reduction Project (1032-0090), Washington, DC 20503, telephone 202-395-7340.

Title: Production Estimate
OMB approval number: 1032-0090
Abstract: The collection is needed to provide data on mineral production for annual reports published by commodity for use by Government agencies, industry, education programs, and the general public. The respondents are producers of metals and industrial minerals.
Bureau form number: 6-1209-A and 6-1209-A-A
Frequency: Quarterly and annually
Description of respondents: Producers of industrial minerals and metals
Estimated completion time: 15 minutes
Annual responses: 6,830
Annual burden hours: 1,708
Bureau clearance officer: Alice J. Wissman, 202-501-9569

Dated: June 12, 1992.

TS Ary,

Director, Bureau of Mines.

[FR Doc. 92-17459 Filed 7-23-92; 8:45 am]

BILLING CODE 4310-53-M

Bureau of Reclamation

Information Collection Submitted to the Office of Management and Budget for Review Under the Paperwork Reduction Act

The proposal for the collection of information listed below has been submitted to the Office of Management and Budget for approval under the provisions of the Paperwork Reduction Act (44 U.S.C. chapter 35). Copies of the proposed collection of information and related forms and explanatory material may be obtained by contacting the Bureau's clearance officer at the telephone number listed below. Comments and suggestions on the requirement should be made within 30 days directly to the bureau clearance officer and to the Officer of Management and Budget, Paper Reduction Project (1006-002), Washington, DC, 20503, telephone 202-395-7340.

Title: Recreation and Wildlife Summary.
OMB approval number: 1006-0002.
Abstract: Recreation and Wildlife summary data are needed to plan, develop, administer, and monitor recreation areas on Bureau of Reclamation projects. These data are used in making land management decisions and in responding to Congressional and public inquiries. Respondents are State and county government agencies and water user organizations that have recreation management agreements with the Bureau of Reclamation.
Bureau Form Number: None.
Frequency: Annual.
Description of Respondents: Non-Federal Public Bodies.
Annual Responses: 160.
Annual Burden Hours: 560.
Bureau Clearance Officer: Robert A. Lopez—303-236-6769.

Dated: June 30, 1992.

Joe D. Hall,

Deputy Commissioner.

Fish and Wildlife Service

Record of Decision for the Establishment of the Stone Lakes National Wildlife Refuge, Sacramento County, CA

AGENCY: U.S. Fish and Wildlife Service, Interior.

ACTION: Notice of decision and notice of availability of the record of decision document.

SUMMARY: This notice makes available to the public the Record of Decision (ROD) for the establishment of Stone Lakes National Wildlife Refuge (Refuge) and Cooperative Wildlife Management Area. The ROD was prepared in accordance with Council on Environmental Quality regulations, 40 CFR 1505.2. The ROD documents the decision of the U.S. Fish and Wildlife Service (Service) based on the information contained in the Final Environmental Impact Statement (EIS) for the Refuge, which was filed with the Environmental Protection Agency on May 15, 1992. The Service has selected the Mitigated Preferred Alternatives as described in the Final EIS as the best alternative for implementing the decision to establish the Refuge. Additional clarifications regarding land protection strategies for the area around South Stone Lake have been added. Responses to individual comment letters received by the Service on the Final EIS are included in an appendix to the ROD.

ADDRESSES: To obtain a copy of the Record of Decision and appendix or for

further information, contact Peter Jerome, Sacramento Realty Field Office, 2233 Watt Avenue, suite 375, Sacramento, California 95825, telephone (916) 978-4420.

SUPPLEMENTARY INFORMATION:

A. Purpose and Need for the Project

The Service proposes to acquire and/or otherwise protect lands in southwestern Sacramento County, California, for establishment of the Stone Lakes National Wildlife Refuge (Refuge) and a Cooperative Wildlife Management Area. The purpose of the project is to protect and restore native Central Valley, California, habitats and provide educational and recreational opportunities for the public. The Stone Lakes Refuge would constitute an addition to the National Wildlife Refuge System (System) and would be operated in accordance with the overall mission of the System.

Loss of wetland and riparian forest habitats in the Central Valley has contributed to steady decreases in waterfowl and other wildlife populations over the past 30 years. Substantial environmental changes over the last 50 years have also contributed to the deterioration of fisheries production, floodwater storage, groundwater recharge, sediment control, recreational opportunities and aesthetic values in the region.

Public and agency awareness of the significance of the Stone Lakes area as an important wildlife area has been growing for over 20 years. At the same time, various Federal and State agencies and private organizations have been addressing the problem of dwindling habitat for migratory waterfowl and other wildlife in the Central Valley. The Stone Lakes area could play a major role in meeting the goal of these entities to protect, enhance, and restore associated habitats for fish and wildlife and plant communities.

B. Legislative Authorities and Funding Sources for Refuge Acquisition

The Service has specific responsibility for the welfare of migratory birds, anadromous fish, and Federally listed endangered animals and plants. The following acts of Congress grant the Service the general authority to acquire land for refuge purposes: the Fish and Wildlife Act of 1956, the Endangered Species Act of 1973, the Emergency Wetlands Resources Act of 1986, the Migratory Bird Conservation Act, and the Migratory Bird Treaty Act. The primary sources of funding for refuge acquisition projects are the Migratory Bird Conservation Fund, Land and Water Conservation Fund, and North American Wetlands Conservation Fund.

C. Public Involvement and Environmental Review

A draft EIS was circulated for public review from May 20 to October 15, 1991. The Service conducted seven public workshops and meetings to answer questions, disseminate information, and accept testimony on the proposed project and draft EIS. The Service received input from over 6,000 commenters. Comments were received from individuals, organizations, and public agencies. The Final EIS was filed with the Environmental Protection Agency and the Notice of Availability appeared in the Federal Register on May 15, 1992. Responses to individual comment letters received by the Service on the Final EIS are included in an appendix to this ROD.

D. Goals of Stone Lakes National Wildlife Refuge

The overall goals for the Stone Lakes National Wildlife Refuge are to:

1. Preserve, enhance, and restore a diverse assemblage of native Central Valley plant communities and their associated fish, wildlife, and plant species;

2. Preserve, enhance, and restore habitat to maintain and assist in the recovery of rare, endangered, and threatened plants and animals;

3. Preserve, enhance, and restore wetlands and adjacent agricultural lands to provide foraging and sanctuary habitat needed to achieve the distribution and population levels of migratory waterfowl and other water birds consistent with the goals and objectives of the North American Waterfowl Management Plan and Central Valley Habitat Joint Venture;

4. Create linkages between Refuge habitats and habitats on adjacent lands to reverse past impacts of habitat fragmentation on wildlife and plant species;

5. Coordinate Refuge land acquisition and management activities with other agencies and organizations and to maximize the effectiveness of Refuge contributions to regional habitat needs;

6. Provide for environmental education, interpretation, and fish and wildlife-oriented recreation in an urban setting accessible to large populations; and

7. Manage riverine wetlands and adjacent floodplain lands in a manner consistent with local, State, and Federal flood management; sediment and erosion control; and water quality objectives.

E. U.S. Fish and Wildlife Service Land Acquisition and Protection Programs

The Service will employ land protection methods such as cooperative agreements, conservation easements, and fee title acquisition to secure the minimum interest in lands necessary to accomplish Refuge goals. Negotiations leading to potential cooperative agreements will commence immediately. The Service also proposes to initiate negotiations with potential willing sellers of fee and easement interests. The time from project approval to acquisition from any given landowner would vary depending on the willingness of the landowner in negotiating, availability of funding, and closing requirements.

Consistent with Service policy commitments contained in the Mitigated Preferred Alternative, the Service has imposed administrative constraints on the use of eminent domain. For example, the Service will not use the power of Eminent Domain, i.e., condemnation, so long as existing or proposed agricultural land uses are consistent with the Sacramento County General Plan (1980) and its current proposed revisions (November 1990). In addition, the Service will implement eminent domain proceedings as a policy of last resort and only on a case-by-case basis which takes into account the relative compatibility of the specific land use at issue with Refuge goals.

F. Cooperative Partnerships

1. Commitments Contained in the Mitigated Preferred Alternative

During the comment period on the Final EIS, the American Farmland Trust encouraged the Service to give additional consideration to developing an innovative, cost-effective public/private alternative that would accomplish the goals of the Service and local landowners in the area of South Stone Lake. Support for the concept of a partnership between nonprofit land trust organizations and the Service is affirmed in the Mitigated Preferred Alternative contained in the Final EIS.

The Service encourages local efforts to develop land-use activities consistent with the purposes of the proposed Refuge. Within the proposed Refuge project area, the Service would seek to protect and manage sufficient acreage to accomplish Refuge goals. Lands in the project areas that are permanently protected in private ownership consistent with Refuge goals would satisfy this requirement (i.e., Federal acquisition would not be necessary). Important factors in determining the

adequacy of protection would include commitment to and enforcement of perpetual covenants, commitment to habitat restoration and enhancement objectives, and commitment to migratory bird foraging and sanctuary requirements as described in the Final EIS.

Perpetual easements acquired through third-party interests are supported by the Services if they accomplish Service protection and management goals. Any property enrolled in such a program would not be considered part of the Refuge but, more appropriately, would be a component of a "Cooperative Wildlife Management Area" that would seek to preserve and enhance both agricultural and wildlife values.

2. Additional Commitments

In addition to commitments made by the Service in the Mitigated Preferred Alternative, the Service will work with The American Farmland Trust, the North Delta Conservancy, and other nonprofit land trust organizations to foster a cooperative public/private partnership whose primary objectives are to preserve both agricultural and wildlife values.

A method for achieving a successful partnership would be to develop and implement the terms of a voluntary Memorandum of Understanding (MOU). An MOU could address mutually agreeable land protection measures in the South Stone Lake area and elsewhere. The Service will pursue this MOU based on the following principles:

(a) A common interest in protecting, enhancing, restoring, and managing wildlife uses in perpetuity;

(b) A common interest in protecting prime and important agricultural land for food production in perpetuity;

(c) A common interest in protecting existing open space in perpetuity;

(d) A recognized role of private landowners to accomplish both habitat preservation and enhancement goals as well as agricultural production goals;

(e) A need for ongoing cooperation, communication, and coordination among all parties;

(f) A commitment to act as good neighbors, recognizing the economic and wildlife objectives of both individual and public agency ownerships;

(g) A process to ensure that when fee title and conservation easement acquisition is desirable or necessary, a process is in place to ensure full coordination and cooperation with all potentially affected parties.

The Service agrees to work cooperatively with the California Department of Water Resources to develop a voluntary MOU. Consistent with Refuge goals, this MOU will address appropriate elements of the Governor of California's Comprehensive Water Plan (April 1992) and associated environmental benefits.

G. Mosquito Abatement

The Service recognizes that an integrated mosquito suppression program can be developed that is consistent with the goals of the Stone Lakes Refuge. Management of water and vegetation along with appropriate biological and chemical control can effectively manage the mosquito population, while protecting Refuge resources, and ensuring the health, safety and welfare of the public.

The Service will continue to work with the Sacramento-Yolo Mosquito and Vector Control District to develop an MOU that effectively addresses the potentially adverse impacts on mosquito abatement as described in the Final EIS. The MOU will ensure that mitigation measures described in the Final EIS will reduce these impacts to acceptable levels.

H. Basis for the Decision

The Mitigated Preferred Alternative represents a revision of the Service's Preferred Alternative (Alternative C1) identified in the draft EIS. Under the Mitigated Preferred Alternative, the Stone Lakes Refuge would consist of an approximate 9,150-acre core area encompassing Upper and Lower Beach Lakes and North and South Stone Lakes. The Service would also support and participate in the establishment of Cooperative Wildlife Management Area approximately 9,100 acres in size.

The Mitigated Preferred Alternative incorporates Service policy commitments designed to minimize the adverse effects of Refuge protection, acquisition, and management programs on recreational use on navigable waters, prime agricultural land conversion, farming practices, land values, and landowners' access to loans, and to ensure cooperation with the Sacramento-Yolo Mosquito and Vector Control District. Given the environmental and economic impacts and technical feasibility of the project, the Mitigated Preferred Alternative would best meet the identified goals of the proposed Refuge and the agency's statutory mission and responsibilities.

I. Alternatives Considered

Six alternatives, in addition to the Mitigated Preferred Alternative, were considered in detail in the Final EIS. These alternatives represent various programs and boundary configurations ranging from approximately 7,500 acres to 74,000 acres. The No Action Alternative represents areas that would remain in public ownership without a national wildlife refuge. Alternative B reflects the minimum land acquisition alternative. The original proposed action is defined by Alternative C and the Preferred Alternative contained in the Draft EIS is defined by Alternative C1. Alternatives D and E represent Refuge configurations that reflect expanded land protection areas to include the Cosumnes River floodplain.

Of the seven alternatives considered in detail, all are environmentally preferable to the No Action Alternative. Alternatives C, C1, D, E, and the Mitigated Preferred Alternative would meet all project goals by providing moderate to very substantial environmental benefits. Alternative A would result in little or no change from existing conditions.

Several off-site alternatives were considered but rejected from detailed analysis because they did not satisfy major goals established for the Refuge. The Stone Lakes study area is characterized by threats and conflicts from urbanization and agricultural conversions that make land protection a priority in order to secure existing habitat values.

J. Mitigation and Monitoring

Mitigation measures that would avoid or reduce adverse impacts of habitat protection, land acquisition and Refuge management are identified in the Final EIS. These measures would reduce significant and potentially significant impacts to less than significant impacts. The Service will implement these mitigation measures as Refuge lands are acquired and specific habitat restoration and Refuge development plans are prepared. Site specific environmental reviews will be completed for projects requiring additional National Environmental Policy Act compliance.

K. Conclusion

Based on review and consideration of the Final Environmental Impact Statement for Stone Lakes National Wildlife Refuge (May 1992), public comments on the EIS, and other relevant factors, I am selecting the Mitigated Preferred Alternative and the clarifications contained in this Record of Decision as the best alternative for implementing the decision to establish the Refuge. Environmental harm will be avoided or minimized through implementation of this action.

Dated: July 17, 1992

Marvin L. Plenert,

Regional Director, Region 1 U.S. Fish and Wildlife Service.

[FR Doc. 92-17491 Filed 7-23-92; 8:45 am]

BILLING CODE 4310-55-M

Office of Surface Mining Reclamation

Information Collection Submitted to the Office of Management and Budget for Review Under the Paperwork Reduction Act

The proposal for the collection of information listed below has been submitted to the Office of Management and Budget for approval under the provisions of the Paperwork Reduction Act (44 U.S.C. ch. 35). Copies of the proposed collection of information and related form may be obtained by contacting the Bureau's clearance officer at the phone number listed below. Comments and suggestions on the requirements should be made directly to the bureau clearance officer and to the Office of Management and Budget, Paperwork Reduction Project (1029-0059), Washington, DC 20503, telephone 202-395-7340.

Title: State Reclamation Grants, 30 CFR part 886

OMB Approval Number: 1029-0059

Abstract: States and Indian tribes participating in the Abandoned Mine Land Reclamation Program are required to assist in the development of the annual submission of projects by providing information required by section 405(f) of the Surface Mining Control and Reclamation Act of 1977. This information is used in the preparation of requests for appropriation of monies for reclamation grants

Bureau form number: None

Frequency: Annually

Description of respondents: States and Indian tribes

Estimated Completion Time: 40 hours

Annual Responses: 28

Annual Burden Hours: 1,120

Bureau Clearance Officer: Andrew F. DeVito, 202-343-5150

Dated: July 8, 1992.

Sarah Donnelly,

Acting Chief, Division of Technical Services.

[FR Doc. 92-17458 Filed 7-23-92; 8:45 am]

BILLING CODE 4310-05-M

INTERSTATE COMMERCE COMMISSION

[Finance Docket No. 30186 (Sub No. 2)]

Tongue River Railroad Co.—Construction and Operation of Additional Rail Line From Ashland to Decker, IN, Rosebud and Big Horn Counties, MT

AGENCY: Interstate Commerce Commission.

ACTION: Notice of availability of draft environmental impact statement.

SUMMARY: The Tongue River Railroad Company has applied to the Interstate Commerce Commission for authority to construct and operate a 42-mile rail line from a point south of Ashland to a connection with operating coal mines near Decker, MT. In addition to analyzing the environmental impacts from the railroad's preferred alignment (which generally parallels the Tongue River), this draft EIS also analyzes the Four Mile Creek Alternative which would avoid the Tongue River Dam and a 10-mile section of the river just north of the Tongue River Dam, and the no-build alternative. At this stage in the environmental analysis, the Commission's Section of Energy and Environment considers the Four Mile Creek Alternative to be the environmentally preferable route should the Commission approve the proposed construction and operation. Comments are specifically requested regarding this preliminary determination and recommended mitigation. The Commission will consider all comments to this draft EIS before issuing a final EIS and rendering a final decision in this proceeding.

DATES: Written comments must be filed by September 21, 1992.

ADDRESSES: Send an original and 10 copies of comments referring to Finance Docket 30186 (Sub No. 2) to: Dana White, Section of Energy and Environment, room 3214, Interstate Commerce Commission, Washington, DC 20423.

Send one copy to the railroad's representative: Mr. Thomas Ebzery, Village Center I, suite 165, 1500 Poly Drive, Billings, MT 59102.

FOR FURTHER INFORMATION CONTACT: Dana White (202) 927-6214 or Elaine Kaiser, Chief, Section of Energy and Environment (202) 927-6248. TDD for hearing impaired: (202) 927-5721.

SUPPLEMENTARY INFORMATION: The Ashland to Decker rail line is an extension of the planned but not yet constructed 89-mile rail line between Miles City and Ashland, MT for which the Tongue River Railroad Company obtained ICC authorization (ICC decision granting construction and operation authority in F.D. 30186, served September 4, 1985) and for which an EIS has been completed (served August 23, 1985).

Copies of this draft EIS have been served on the parties of record and to appropriate Federal, state, local and private agencies and individuals for review and comment. Requests for additional copies of the draft EIS should be directed to Dana White, Section of Energy and Environment, Interstate Commerce Commission, Washington, DC 20423, or by telephoning (202) 927-6214.

Dated: July 17, 1992.

By the Commission, Howard K. Face, Director, Office of Economics.

Sidney L. Strickland, Jr.

Secretary.

[FR Doc. 92-17511 Filed 7-23-92; 8:45 am]

BILLING CODE 7035-01-M

[Finance Docket No. 32098]

Soo Line Railroad Co. and Chicago and Northwestern Transportation Co.—Joint Relocation Projection Exemption

On June 25, 1992, Soo Line Railroad Company (Soo) and Chicago and Northwestern Transportation Company (C&NW) jointly filed a notice of exemption under 49 CFR 1180.2(d)(5) to relocate a line of railroad at Janesville, WI.[1] Soo and C&NW currently own trackage in the area of Janesville that are rougly parallel. Soo's line suffered a severe washout in 1989 which required the detouring of both Soo and Wisconsin and Calumet Railroad Company, Inc. (WICT) onto C&NW and the embargoing of Soo's line between milepost 46.75 and milepost 48.8. The State of Wisconsin has requested Soo to sever its line at Black Bridge Road in Janesville, near milepost 47.75, in favor of a highway project.

WICT, until recently, held trackage rights over the involved portion of Soo's line. However, due to the washout and subsequent embargo, WICT and Soo agreed to cancel the trackage rights. WICT now holds trackage rights over the same portion of C&NW's line as Soo will hold.

The joint project involves: (1) Acquisition of overhead trackage rights by Soo over C&NW's rail line between C&NW milepost 91.57 and C&NW

[1] After being contacted by Commission staff, Soo amended its notice on July 14, 1992.

milepost 94.5, a distance of approximately 2.93 miles; (2) the incidental abandonment of Soo's line between Soo milepost 46.75 and Soo milepost 48.8, a distance of approximately 2.15 miles; and (3) the discontinuance of WICT's trackage rights over Soo's to be abandoned line.[2] The transaction was to have been consummated on or about July 2, 1992.

The joint relocation project will: (1) Assist the City of Janesville in a highway improvement project by eliminating troublesome street crossings; (2) allow Soo to avoid heavy expenses associated with restoring the line; and (3) improve the operations of Soo, C&NW, and WICT at Janesville by combining their operations. The shippers of Soo will continue to be served without any disruption of services. There will be no expansion into new territory; nor will there be a change in the existing competitive situation.

The Commission will exercise jurisdiction over the abandonment and/or discontinuance component of a relocation project only where the proposal involves, for example, a change in service to shippers, expansion into new territory, or a change in existing competitive situations. See, generally, Denver & R.G.W.R. Co.—Jt. Proj.—Relocation over BN, 4 I.C.C.2d 95 (1987). Under these standards, the abandonment and discontinuance under consideration here is not subject to the Commission's jurisdiction. The Commission has determined that line relocations embrace trackage rights transactions such as the ones proposed here. See D.T. & I.R—Trackage Rights, 363 I.C.C. 878(1981).

As a condition to the use of this exemption, any employees affected by the trackage rights agreement will be protected by the conditions in Norfolk and Western Ry. Co.—Trackage Rights—BN, 354 I.C.C. 605 (1989), as modified in Mendocino Coast Ry., Inc.—Lease and Operate, 360 I.C.C. 653 (1980), and as clarified in Wilmington Term. R.R., Inc.—Pur. & Lease— CSX Transp. Inc., 6 I.C.C.2d 799 (1990), aff'd sub nom. Railway Labor Executives Ass'n v. ICC, 930 F.2d 511 (6th Cir. 1991).

Petitions to revoke the exemption under 49 U.S.C. 10505(d) may be filed any time. The filing of a petition to revoke will not stay the transaction. Pleadings must be filed with the Commission and served on: Larry D. Starns, 1000 Soo Line Building, 105 South 5th Street, Minneapolis, MN 55402; and Stuart F. Gassner, One North Western Center, 165 North Canal Street, Chicago, IL 60606.

Dated: July 17, 1992.

By the Commission, David M. Konschnik, Director, Office of Proceedings.

Sidney L. Strickland, Jr.

Secretary.

[FR Doc. 92-17518 Filed 7-23-92; 8:45 am]

BILLING CODE 7035-01-M

[2] It is not clear whether Soo and C&NW have requested that WICT's trackage rights over C&NW be included in the transaction that is subject to the notice of exemption. It appears that WICT's trackage rights do fall within the joint relocation project exemption.

[Docket No. AB-55 (Sub-No. 381X)]

Exemption; CSX Transportation, Inc.; Abandonment Exemption; in Somerset County, PA

Applicant CSX Transportation, Inc., has filed a notice of exemption under 49 CFR 1152 subpart F—Exempt Abandonment to abandon its 1.28-mile rail line between milepost 0.03, near PW&S Junction, to milepost 1.31, at Summit.

Applicant has certified that: (1) No local traffic has moved over the line for a least 2 years; (2) there is no overhead traffic on the line; (3) no formal complaint filed by a user of rail service on the line (or by a State or local government entity acting on behalf of such user) regarding cessation of service over the line either is pending with the Commission or with any U.S. District Court or has been decided in favor of the complainant within the 2-year period, and (4) that the requirements at 49 CFR 1105.12 (newspaper publications) and 49 CFR 1152.50(d)(1) (notice to governmental agencies) have been met.

As a condition to this exemption, any employee adversely affected by the abandonment shall be protected under Oregon Short Line R. Co.—Abandonment—Goshen, 360 I.C.C. 91 (1979). To address whether this condition adequately protects affected employees, a petition for partial revocation under 49 U.S.C. 10505(d) must be filed.

This exemption will be effective on August 24, 1992, unless stayed or a formal expression of intent to file an offer of financial assistance (OFA) is filed. Petitions to stay that do not involve environmental issues,[1] formal expressions of intent to file an OFA under 49 CFR 1152.27(c)(2),[2] and trail use/rail banking requests under 49 CFR 1152.29 [3] must be filed by August 3, 1992. Petitions to reopen or requests for public use conditions under 49 CFR 1152.28 must be filed by August 13, 1992, with: Office of the Secretary, Case Control Branch, Interstate Commerce Commission, Washington, DC 20423.

A copy of any pleading filed with the Commission should be sent to applicant's representative: Charles M. Rosenberger, 500 Water Street J150, Jacksonville, FL 32202.

If the notice of exemption contains false or misleading information, the exemption is void *ab initio*.

Applicant has filed an environmental report which addresses the abandonment's effects, if any, on the environment and historic resources. SEE will issue an environmental assessment (EA) by July 29, 1992. Interested persons may obtain a copy of the EA by writing to SEE (room 3219, Interstate Commerce Commission, Washington, DC 20423) or by calling Elaine Kaiser, Chief of SEE, at (202) 927-6248. Comments on environmental and historic preservation matters must be filed within 15 days after the EA is available to the public.

Environmental, historic preservation, public use, or trail use/rail banking conditions will be imposed, where appropriate, in a subsequent decision.

Decided: July 14, 1992.

By the Commission, David M. Konschnik, Director, Office of Proceedings.

Sidney L. Strickland, Jr.,

Secretary.

[FR Doc. 92-17517 Filed 7-23-92; 8:45 am]

BILLING CODE 7035-01-M

[1] A stay will be issued routinely where an informed decision on environmental issues, whether raised by a party or by the Commission's Section of Energy and Environment (SEE), cannot be made before the effective date of the notice of exemption. See *Exemption of Out-of-Service Rail Lines*, 5 I.C.C.2d 377 (1989). Any entity seeking a stay on environmental grounds is encouraged to file promptly so that the Commission may act on the request before the effective date.

[2] See *Exempt. of Rail Abandonment—Offers of Finan. Assist.*, 4 I.C.C.2d 164 (1987).

[3] The Commission will accept a late-filed trail use request as long as it retains jurisdiction to do so.

DEPARTMENT OF JUSTICE

Antitrust Division

Notice Pursuant to the National Cooperative Research Act of 1984—Bell Communications Research, Inc.

Notice is hereby given that, pursuant to section 6(a) of the National Cooperative Research Act of 1984, 15 U.S.C. 4301 *et seq.* ("the Act"), Bell Communications Research, Inc. ("Bellcore") on June 10, 1992 filed a written notification on behalf of Bellcore and Apple Computer, Inc. ("Apple") simultaneously with the Attorney General and the Federal Trade

Commission disclosing (1) the identities of the parties to the venture and (2) the nature and objective of the venture. The notification was filed for the purpose of invoking the Act's provisions limiting the recovery of antitrust plaintiffs to actual damages under specified circumstances. Pursuant to section 6(b) of the Act, the identities of the parties to the venture, and its general areas of planned activities are given below.

Bellcore is a Delaware corporation with its principal place of business in Livingston, New Jersey.

Apple is a California corporation with its principal place of business in Cupertino, California.

Effective on March 10, 1992, Bellcore and Apple entered into an agreement to engage in cooperative research collaboration directed to exploring the technology for broadband communications utilizing asynchronous transfer mode and ATM transport mechanisms, to better understand the applications of this technology for exchange and exchange access services, including prototype fabrication for the experimental demonstration of such technology.

Joseph H. Widmar,

Director of Operations Antitrust Division.

[FR Doc. 92-17462 Filed 7-23-92; 8:45 am]

BILLING CODE 4410-01-M

Notice Pursuant to the National Cooperative Research Act of 1984; Brass and Bronze Environmental Research Corporation

Notice is hereby given that, on June 30, 1992, pursuant to section 6(a) of the National Cooperative Research Act of 1984, 15 U.S.C. 4301 *et seq.* ("the Act"), Brass and Bronze Environmental Research Corporation ("BBERC") has filed written notification simultaneously with the Attorney General and the Federal Trade Commission disclosing (1) the identities of the parties to a joint research venture, and (2) the nature and objectives of the venture. The notification was filed for the purpose of invoking the Act's provisions limiting the potential recovery of antitrust plaintiffs to actual damages under specified circumstances. Pursuant to section 6(b) of the Act, the identities of the parties to the joint research venture and its general area of planned activities are given below.

The parties to the joint research venture are: The G. A. Avril Company, Cincinnati, OH; W.J. Bullock, Inc., Fairfield, AL; Colonial Metals Co., Columbus, OH; Federal Metal Company, Bedford, OH; N. Kamenske & Company, Inc., Nashua, NH; R. Lavin & Sons, Inc., Chicago, IL; National Metals, Inc., Leeds, AL; River Smelting & Refining Co., Cleveland, OH; I. Schumann & Company, Bedford, OH; Brass and Bronze Ingot Manufacturers, Chicago, IL; and Brass and Bronze Environment Research Corporation, Chicago, IL.

The nature and objective of the joint research is the development of technology for removing lead from copper-based scrap.

Joseph H. Widmar,

Director of Operations, Antitrust Division.

[FR Doc. 92-17453 Filed 7-23-92; 8:45 am]

BILLING CODE 4410-01-M

Notice Pursuant to the National Cooperative Research Act of 1984—Cable Television Laboratories, Inc.

Notice is hereby given that, pursuant to section 6(a) of the National Cooperative Research Act of 1984, 15 U.S.C. 4301, *et seq.* ("the Act"), Cable Television Laboratories, Inc. ("CableLabs") on May 18, 1992, filed an additional written notification simultaneously with the Attorney General and the Federal Trade Commission disclosing additions to the membership. The additional notification was filed for the purpose of extending the protections of section 4 of the Act, limiting the recovery of antitrust plantiffs to actual damages under specified circumstances.

On August 8, 1988, CableLabs filed its original notification pursuant to section 6(a) of the Act. The Department of Justice published a notice in the **Federal Register** pursuant to section 6(b) on September 7, 1988 (53 FR 34593). On November 7, 1988, February 3, 1989, October 12, 1989, February 20, 1991, and February 18, 1992, CableLabs filed additional written notifications. The Department published notices in the **Federal Register** in response to the additional notifications on December 16, 1988 (53 FR 50590), March 1, 1989 (54 FR 8608), December 15, 1989 (54 FR 51510), April 10, 1991 (56 FR 14543), and April 15, 1992 (57 FR 13121), respectively.

The following parties have become members of CableLabs: Barden Communications, Inc., Detroit, MI—effective 1/18/92; Duhamel Cable, Rapid City, SD—effective 4/10/92; Prestige Cable TV of Maryland, Inc., Cavlersville, GA—effective 2/26/92; and Princetown Cable Company, Schenectady, NY—effective 3/13/92.

No other changes have been made in either the membership or planned activity of CableLabs. The membership remains open.

Joseph H. Widmar,

Director of Operations, Antitrust Division.

[FR Doc. 92-17463 Filed 7-23-92; 8:45 am]

BILLING CODE 4410-01-M

Notice Pursuant to the National Cooperative Research Act of 1984—Cable Television Laboratories, Inc./Nexus Engineering Corp./General Instrument Corp.

Notice is hereby given that, pursuant to section 6(a) of the National Cooperative Research Act of 1984, 15 U.S.C. 4301 *et seq.* ("the Act"), Cable Television Laboratories, Inc. ("CableLabs"), Nexus Engineering Corp. ("NEXUS") and General Instrument Corporation ("GI") on May 18, 1992, filed a written notification simultaneously with the Attorney General and the Federal Trade Commission disclosing additions to the membership. The notification was filed for the purpose of invoking the protections of section 4 of the Act, which limit the recovery of antitrust plaintiffs to actual damages under specified circumstances.

On June 27, 1991, CableLabs, Nexus and GI filed their original notification pursuant to section 6(a) of the Act. The Department published a notice in the **Federal Register** pursuant to section 6(b) of the Act on July 25, 1991 (56 FR 34075). On February 18, 1992, CableLabs filed an additional written notification. The Department published a notice in the **Federal Register** in response to the additional notification on April 15, 1992 (57 FR 13122).

Pursuant to section 6(b) of the Act, the identities of the additional members are: Barden Communications, Inc., Detroit, MI—effective 2/18/92; Duhamel Cable, Rapid City, SD—effective 4/10/92; Prestige Cable TV of Maryland, Inc., Cavlersville, GA—effective 2/26/92; and Princetown Cable Company, Schenectady, NY—effective 3/13/92.

The area of activity remains the cooperation in the development of interface concepts between personal communications networks and cable system networks, including the exchange of information related to the functions and architecture of personal communications networks and cooperation in the conduct of radio frequency tests in connection with

experimental personal communications networks licenses issued by the FCC.

Joseph H. Widmar,

Director of Operations, Antitrust Division.

[FR Doc. 92-17454 Filed 7-23-92; 8:45 am]

BILLING CODE 4410-01-M

Notice Pursuant to the National Cooperative Research Act of 1984—"Ultral Low Emission Engine Program"

Notice is hereby given that, on June 30, 1992, pursuant to section 6(a) of the National Cooperative Research Act of 1984, 15 U.S.C. 4301, *et seq.* ("the Act"), Southwest Research Institute ("SwRI") filed a written notification simultaneously with the Attorney General and the Federal Trade Commission disclosing the addition of a new participant to its group research project regarding "Ultra Low Emission Engine Program." The notification was filed for the purpose of invoking the Act's provisions limiting the recovery of antitrust plaintiffs to actual damages under specified circumstances. Specifically, SwRI advised that Hyundai Motor Company, Seoul, Republic of Korea, represented by Hyundai America Technical Center, Inc., Ann Arbor, Michigan (effective June 5, 1992) has become party to the group research project.

No other changes have been made in either the membership or planned activity of the group research project. Membership in this group research project remains open, and SwRI intends to file additional written notification disclosing all changes in membership.

On November 13, 1991, SwRI filed its original notification pursuant to section 6(a) of the Act. The Department of Justice ("the Department") published a notice in the **Federal Register** pursuant to section 6(b) of the Act on December 9, 1991, 56 FR 64276. On January 9, 1992, SwRI filed an additional written notification. The Department published a notice in the **Federal Register** in response to the additional notification on January 29, 1992, 57 FR 3441. On March 9, 1992, SwRI filed an additional written notification. The Department published a notice in the **Federal Register** in response to the additional notification on April 30, 1992, 57 FR 18529. Additionally, a correction notice to the December 9, 1991, notice was published on January 29, 1992, 57 FR 3441.

Joseph H. Widmar,

Director of Operations, Antitrust Division.

[FR Doc. 92-17464 Filed 7-23-92; 8:45 am]

BILLING CODE 4410-01-M

DEPARTMENT OF LABOR

Office of the Secretary

Agency Recordkeeping/Reporting Requirements Under Review by the Office of Management and Budget

Background: The Department of Labor, in carrying out its responsibilities under the Paperwork Reduction Act (44 U.S.C. chapter 35), considers comments on the reporting/recordkeeping requirements that will affect the public.

List of Recordkeeping/Reporting Requirements Under Review: As necessary, the Department of Labor will publish a list of the Agency recordkeeping/reporting requirements under review by the Office of Management and Budget (OMB) since the last list was published. The list will have all entries grouped into new collections, revisions, extensions, or reinstatements. The Departmental Clearance Officer will, upon request, be able to advise members of the public of the nature of the particular submission they are interested in.

Each entry may contain the following information:

The Agency of the Department issuing this recordkeeping/reporting requirement.

The title of the recordkeeping/reporting requirement.

The OMB and/or Agency identification numbers, if applicable.

How often the recordkeeping/reporting requirement is needed.

Whether small businesses or organizations are affected.

An estimate of the total number of hours needed to comply with the recordkeeping/reporting requirements and the average hours per respondent.

The number of forms in the request for approval, if applicable.

An abstract describing the need for and uses of the information collection.

Comments and Questions: Copies of the recordkeeping/reporting requirements may be obtained by calling the Departmental Clearance Officer, Kenneth A. Mills (202-523-5095). Comments and questions about the items on this list should be directed to Mr. Mills, Office of Information Resources Management Policy, U.S. Department of Labor, 200 Constitution Avenue, NW., room N-1301, Washington, DC 20210. Comments should also be sent to the Office of Information and Regulatory Affairs, Attn: OMB Desk Officer for (BLS/DM/ESA/ETA/OLMS/MSHA/OSHA/PWBA/VETS), Office of Management and Budget, room 3001, Washington, DC 20503 (202-395-6880).

Any member of the public who wants to comment on recordkeeping/reporting requirements which have been submitted to OMB should advise Mr. Mills of this intent at the earliest possible date.

Revision

Bureau of Labor Statistics

Annual Survey of Occupational Injuries and Illnesses.

1220-0045; BLS 9300.

Annually.

State and local government (as per State law); farms; businesses or other for-profit; non-profit institutions; small businesses or organizations.

280,000 respondents; 54 minutes per response; 250,000 total burden hours; 1 form.

The Annual Survey of Occupational Injuries and Illnesses is the primary indicator of the nation's progress in providing every working person safe and healthful working conditions. Survey data are used to evaluate the effectiveness of Federal and State programs and to prioritize scarce resources.

Extension

Mine Safety and Health Administration

Record of Mine Closure.

1219-0073.

On occasion.

Businesses or other for profit; small businesses or organizations 1,000 respondents; 2 hours per response; 2,000 total burden hours Requires that, whenever coal mine operators permanently close or abandon a coal mine or temporarily close a coal mine for a period of 90 days, they file with MSHA a copy of the mine map which is revised and supplemented to the date of closure. Maps are retained in a repository and are made available to mine operators of adjacent properties.

Extension

Employment Standards Administration

Request for State Federal Workers' Compensation Information.

1215-0060.

CM-905.

On occasion.

State and local governments; Federal agencies or employees.

4,400 respondents; 11,000 total hours; .25 hours per response; 1 form.

30 U.S.C. 922 and 20 CFR 725.535 specify that beneficiaries of DCMWC have their benefits reduced by those amounts which they receive from State or other Federal workers' compensation programs attributable to a black lung-related disability.

Extension

Mine Safety and Health Administration

Qualifications and Certification Program (30 CFR 75.100, 75.155, 77.100 and 77.105).

1219–0069.

On occasion.

Businesses or other for-profit; small businesses or organizations 1,552 respondents; 225 total burden hours; 0.164 average hours per response; 2 forms MSHA 5000–4 and 5000–7.

The Qualifications and Certification Program provides provisions whereby persons may be qualified or certified to perform tests or examinations at coal mines which are related to miner safety and health and which require specialized expertise.

Reinstatement

Mine Safety and Health Administration

Training Plan Regulations (30 CFR 48.3 and 48.23).

1219–0009.

On occasion for revisions and one-time for new mines.

Businesses and other for profit; small businesses or organizations.

1,300 respondents; 8 hours per response; 10,400 total burden hours.

Requires mine operators to have an MSHA approved plan containing programs for training new miners, training newly employed experienced miners, training miners for new tasks, annual refresher training, and hazard training.

Extension

Mine Safety and Health Administration

Applications for Approval of Sanitary Toilet Facilities (30 CFR 71.500 and 75.1717–6).

1219–0101.

On occasion.

Businesses and other for profit; small businesses or organizations.

2 respondents; 8 hours per response; 16 total burden hours.

Contains procedures by which manufacturers of sanitary toilet facilities may apply for, and have their product approved as permissible for use in coal mines. To gain approval, the manufacturer must submit sufficient information needed to make an effective evaluation of the sanitary features of the facilities.

Signed at Washington, DC, this 15th day of July, 1992.

Kenneth A. Mills,

Departmental Clearance Officer.

[FR Doc. 92–17541 Filed 7–23–92; 8:45 am]

BILLING CODE 4510–23–M

Employment and Training Administration

[TA-W-27,229]

Cheyenne Petroleum Co., Oklahoma City, OK; Revised Determination on Reconsideration

On July 10, 1992, the Department issued an Affirmative Determination Regarding Application for Reconsideration for workers and former workers of Cheyenne Petroleum Company in Oklahoma City, Oklahoma. This notice will soon be published in the **Federal Register.**

New findings on reconsideration show that the Cheyenne Petroleum Company is not a service company but is an integrated producer. Cheyenne Petroleum owns wells and sells crude oil and natural gas to customers.

Other findings on reconsideration show revenues declining in 1991 compared to 1990 and in the first four months of 1992 compared to the same period in 1991. Average employment levels declined in 1991 compared to 1990 and in the first four month of 1992 compared to the same period in 1991.

U.S. imports of crude oil increased absolutely and relative to domestic shipments in the period April 1991 through March 1992 as compared to the year earlier.

Other findings on reconsideration show major crude oil customers decreasing their purchases from Cheyenne and increasing their import purchases in 1991 compared to 1990 and in the first quarter of 1992 compared to the same period in 1991.

Conclusion

After careful consideration of the new facts obtained on reconsideration, it is concluded that Cheyenne Petroleum Company workers in Oklahoma City, Oklahoma were adversely affected by increased imports of articles like or directly competitive with crude oil and natural gas produced at Cheyenne Petroleum, Oklahoma City, Oklahoma. In accordance with the provisions of the Act, I make the following revised certification for the Cheyenne Petroleum workers in Oklahoma City, Oklahoma.

All workers of Cheyenne Petroleum Company in Oklahoma City, Oklahoma who became totally or partially separated from employment on or after April 27, 1991 are eligible to apply for adjustment assistance under Section 223 of the Trade Act of 1974.

Signed at Washington, DC., this 16th day of July 1992.

Stephen A. Wandner,

Deputy Director, Office of Legislation & Actuarial Services Unemployment Insurance Service.

[FR Doc. 92–17531 Filed 7–23–92; 8:45 am]

BILLING CODE 4510–30–M

[TA-W-27, 240]

Intelligraphis, Inc., Waukesha, WI; Dismissal of Application for Reconsideration

Pursuant to 29 CFR 90.18 an application for administrative reconsideration was filed with the Director of the Office of Trade Adjustment Assistance for workers at Intelligraphis, Incorporated, Waukesha, Wisconsin. The review indicated that the application contained no new substantial information which would bear importantly on the Department's determination. Therefore, dismissal of the application was issued.

TA–W–27, 240; Intelligraphis, Incorporated Waukesha, Wisconsin (July 16, 1992)

Signed at Washington, DC this 17th day of July 1992.

Marvin M. Fooks,

Director, Office of Trade Adjustment Assistance.

[FR Doc. 92–17530 Filed 7–23–92; 8:45 am]

BILLING CODE 4510–30–M

[TA-W-27,304]

Kerr-McGee Corp., Morgan City, LA; Termination of Investigation

Pursuant to section 221 of the Trade Act of 1974, an investigation was initiated on May 26, 1992 in response to a worker petition which was filed on behalf of workers at the Morgan City, Louisiana facility of Kerr-McGee Corporation.

The petitioning group of workers is subject to an ongoing investigation for which a determination has not yet been issued (TA–W–27, 286). Consequently, further investigation in this case would serve no purpose, and the investigation has been terminated.

Signed at Washington, DC this 14th day of July 1992.

Marvin M. Fooks,

Director, Office of Trade Adjustment Assistance.

[FR Doc. 92–17534 Filed 7–23–92; 8:45 am]

BILLING CODE 4510–30–M

[TA-W-26,979, et al]

Mobil Exploration and Producing U.S., Inc., et al.; Amended Certification Regarding Eligibility to Apply for Worker Adjustment Assistance

In the Matter of TA-W-26,979, Mobil Exploration and Producing U.S., Incorporated (MEPUS) headquartered in Dallas, TX; TA-W-26,979A, MEPUS Liberal Division, headquartered in Liberal, KS and operating at other sites in the following states: TA-W-26,979B Kansas, TA-W-26,979C Oklahoma, TA-W-26,979D Texas; TA-W-26,979E, MEPUS Oklahoma City Division, headquartered in Oklahoma City, OK and operating at other sites in the following states: TA-W-26,979F California, TA-W-26,979G Colorado, TA-W-26,979H Oklahoma, TA-W-26,979I Texas; TA-W-26,979J, MEPUS Bakersfield Division, headquartered in Bakersfield, CA; TA-W-26,965, MEPUS Dallas Affiliate, headquartered in Dallas, TX and operating at other sites in the following states: TA-W-26,965A Louisiana, TA-W-26,965B Oklahoma; TA-W-26,966, MEPUS Denver Division, headquartered in Denver, CO and operating at other sites in the following states: TA-W-26,966A California, TA-W-26,966B Colorado, TA-W-26,966C New Mexico, TA-W-26,966D Oklahoma, TA-W-26,966E Texas, TA-W-26,966F Wyoming; TA-W-26,976, MEPUS Houston Division, headquartered in Houston, TX and operating at other sites in the following states: TA-W-26,976A Louisiana, TA-W-26,976B Texas; TA-W-26,977, MEPUS Midland Division, headquartered in Midland, TX and operating at other sites in the following states: TA-W-26,977A Colorado, TA-W-26,977B New Mexico, TA-W-26,977C Texas, TA-W-26,977D, Utah; TA-W-26,983, MEPUS New Orleans/Offshore Division, headquartered in New Orleans, LA and operating at other sites in the following states: TA-W-26,983A Alabama, TA-W-26,983B Louisiana, TA-W-26,983C Texas; TA-W-26,978, Mobil Exploration and Producing Services, Incorporated (MEPSI), headquartered in Dallas, TX and operating at other sites in the following states: TA-W-26,978A California, TA-W-26,978B Colorado, TA-W-26,978C Kansas, TA-W-26,978D Louisiana, TA-W-26,978E New Mexico, TA-W-26,978F Oklahoma, TA-W-26,978G Texas.

In accordance with section 223 of the Trade Act of 1974 (19 U.S.C. 2273) as amended by the Omnibus Trade and Competitiveness Act of 1988 (Pub. L. 100-418), the Department of Labor issued a Certification of Eligibility to Apply for Worker Adjustment Assistance on April 30, 1992 applicable to all workers of the subject firm at the locations indicated except for the Bakersfield Division. The notice was published in the **Federal Register** on May 19, 1992 (57 FR 21304).

Based on new information from the company, workers of the Bakersfield Division of MEPUS headquartered in Bakersfield, California were omitted from the certification. Therefore, the certification is amended by including the Bakersfield Division of MEPUS in Bakersfield, California.

The amended notice applicable to TA-W-26,979 is hereby issued as follows:

All workers of Mobil Exploration and Producing U.S., Incorporated (MEPSI), headquartered in Dallas, Texas (TA-W-26,979) and operating at various locations in the below cited divisions (and States) and Mobil Exploration and Producing Services, Incorporated (MEPUS), headquartered in Dallas, Texas (TA-W-26,978) and operating at various locations in the below cited States who became totally or partially separated from employment on or after January 1, 1991 are eligible to apply for adjustment assistance under section 223 of the Trade Act of 1974:

TA-W-26,979A, MEPUS Liberal Division, headquartered in Liberal, KS and operating at other sites in the following states: TA-W-26,979B Kansas, TA-W-26,979C Oklahoma, TA-W-26,979D Texas; TA-W-26,979E, MEPUS Oklahoma City Division, headquartered in Oklahoma City, OK and operating at other sites in the following states: TA-W-26,979F California, TA-W-26,979G Colorado, TA-W-26,979H Oklahoma, TA-W-26,979I Texas; TA-W-26,979J, MEPUS Bakersfield Division, headquartered in Bakersfield, CA; TA-W-26,965, MEPUS Dallas Affiliate, headquartered in Dallas, TX and operating at other sites in the following states: TA-W-26,965A Louisiana, TA-W-26,965B Oklahoma; TA-W-26,966, MEPUS Denver Division, headquartered in Denver, CO and operating at other sites in the following states: TA-W-26,966A California, TA-W-26,966B Colorado, TA-W-26,966C New Mexico, TA-W-26,966D Oklahoma, TA-W-26,966E Texas, TA-W-26,966F Wyoming; TA-W-26,976, MEPUS Houston Division, headquartered in Houston, TX and operating at other sites in the following states: TA-W-26,976A Louisiana, TA-W-26,976B Texas; TA-W-26,977, MEPUS Midland Division, headquartered in Midland, TX and operating at other sites in the following states: TA-W-26,977A Colorado, TA-W-26,977B New Mexico, TA-W-26,977C Texas, TA-W-26,977D Utah; TA-W-26,983, MEPUS New Orleans/Offshore Division, headquartered in New Orleans, LA and operating at other sites in the following states: TA-W-26,983A Alabama, TA-W-26,983B Louisiana, TA-W-26,983C Texas; TA-W-26,978, MEPSI operating at other sites in the following states: TA-W-26,978A California, TA-W-26,978B Colorado, TA-W-26,978C Kansas, TA-W-26,978D Louisiana, TA-W-26,978E New Mexico, TA-W-26,978F Oklahoma, TA-W-26,978G Texas.

Signed in Washington, DC this 16th day of July 1992.

Marvin M. Fooks,

Director, Office of Trade Adjustment Assistance.

[FR Doc. 92-17527 Filed 7-23-92; 8:45 am]

BILLING CODE 4510-30-M

[TA-W-26,872]

National-Oilwell, Garland, TX; Dismissal of Application for Reconsideration

Pursuant to 29 CFR 90.18 an application for administrative reconsideration was filed with the Director of the Office of Trade Adjustment Assistance for workers at National-Oilwell, Garland, Texas. The review indicated that the application contained no new substantial information which would bear importantly on the Department's determination. Therefore, dismissal of the application was issued.

TA-W-26, 872; National-Oilwell, Garland, Texas (July 16, 1992).

Signed at Washington, DC this 17th day of July 1992.

Marvin M. Fooks,

Director, Office of Trade Adjustment Assistance.

[FR Doc. 92-17528 Filed 7-23-92; 8:45 am]

BILLING CODE 4510-30-M

[TA-W-26,968]

Signetics Co., Orem, UT; Affirmative Determination Regarding Application for Reconsideration

On June 24, 1992, the company's counsel requested administrative reconsideration of the Department of Labor's Notice of Negative Determination Regarding Eligibility to Apply for Worker Adjustment Assistance for workers at the subject firm. The Department's decision was issued on May 15, 1992 and published in the **Federal Register** on May 28, 1992, (57 FR 22492).

Counsel for the company stated that the Department's survey was faulty since it did not consider the effect of bipolar integrated circuit displacement with MOS-ASIC articles.

Conclusion

After careful review of the application, I conclude that the claim is of sufficient weight to justify reconsideration of the Department of Labor's prior decision. The application is, therefore, granted.

Signed at Washington, DC, this 10th day of July 1992.

Stephen A. Wandner,

Deputy Director, Office of Legislation and Actuarial Services Unemployment Insurance Service.

[FR Doc. 92-17533 Filed 7-23-92; 8:45 am]

BILLING CODE 4510-30-M

[TA-W-27,075]

Fiber Materials, Inc. Columbus, OH; Negative Determination Regarding Application for Reconsideration

By an application dated July 9, 1992, counsel for the company requested administrative reconsideration of the subject petition for trade adjustment assistance. The denial notice was signed on June 3, 1992 and was published in the **Federal Register** on June 26, 1992 (57 FR 28706).

Pursuant to 29 CFR 90.18(c) reconsideration may be granted under the following circumstances:

(1) If it appears on the basis of facts not previously considered that the determination complained of was erroneous;

(2) If it appears that the determination complained of was based on a mistake in the determination of facts not previously considered; or

(3) If in the opinion of the Certifying Officer, a misinterpretation of facts or of the law justified reconsideration of the decision.

The Department's denial was based on the fact that the increased import criterion of the Group Eligibility Requirements of the Trade was not met. U.S. imports of yarn declined absolutely and relative to domestic shipments in 1991 compared to 1990. FMI's high purity quartz yarn (HPQY) was not qualified for U.S. government aerospace and military programs. The findings show that FMI never developed a customer base.

Counsel states that a foreign owned domestic plant, QPC, is importing raw material for the domestic production of HPQY. He states that since government customers could purchase qualified HPQY from QPC, there was no need to fund required qualification testing for a domestic second source.

Neither foreign ownership of a domestic firm or the raw material imports for a finished article would meet the increased import criterion needed for certification. Lastly, the lack of funding by the U.S. government for qualification testing would not form a basis for certification.

The investigation findings show that purpose of Title III of the Defense Production Act (DPA) is to establish a domestic manufacturing capability for Department of Defense (DOD) critical materials. Accordingly, in 1988 the administrators of the DPA determined that a second source for HPQY was needed. The findings show that a contract to produce 60,000 pounds of HPQY at FMI was funded by the Federal Government. During the performance of this contract, FMI was unable to qualify the HPQY material on any government programs. The contract was completed in 1992 and workers were separated at FMI. By 1992, the demand for HPQY had declined drastically from the cancellation of many weapons systems. DPA's purpose was never to establish a customer base for domestic firms producing critical materials. Worker separations occurred because of the completion of the contract.

With regard to the metal matrix composites produced at FMI, the decreased sales and production requirement was not met. Sales and production of metal matrix composites increased in 1991 compared to 1990 and did not decline in the first quarter of 1992 compared to the same quarter in 1991.

Conclusion

After review of the application and investigative findings, I conclude that there has been no error or misinterpretation of the law or of the facts which would justify reconsideration of the Department of Labor's prior decision. Accordingly, the application is denied.

Signed at Washington, DC, this 15th day of July 1992.

Stephen A. Wandner,

Deputy Director, Office of Legislation & Actuarial Service Unemployment Insurance Service.

[FR Doc. 92-17532 Filed 7-23-92; 8:45 am]

BILLING CODE 4510-30-M

Investigations Regarding Certifications of Eligibility to Apply for Worker Adjustment Assistance; Sunshine Shake & Shingle Co. et al.

Petitions have been filed with the Secretary of Labor under section 221 (a) of the Trade Act of 1974 ("the Act") and are identified in the Appendix to this notice. Upon receipt of these petitions, the Director of the Office of Trade Adjustment Assistance, Employment and Training Administration, has instituted investigations pursuant to section 221(a) of the Act.

The purpose of each of the investigations is to determine whether the workers are eligible to apply for adjustment assistance under title II, chapter 2, of the Act. The investigations will further relate, as appropriate, to the determination of the date on which total or partial separations began or threatened to begin and the subdivision of the firm involved.

The petitioners or any other persons showing a substantial interest in the subject matter of the investigations may request a public hearing, provided such request is filed in writing with the Director, Office of Trade Adjustment Assistance, at the address shown below, not later than August 3, 1992.

Interested persons are invited to submit written comments regarding the subject matter of the investigations to the Director, Office of Trade Adjustment Assistance, at the address show below, not later than August 3, 1992.

The petitions filed in this case are available for inspection at the Office of the Director, Office of Trade Adjustment Assistance, Employment and Training Administration, U.S. Department of Labor, 200 Constitution Avenue, NW., Washington, DC 20210.

Signed at Washington, DC this 13th day of July 1992.

Marvin M. Fooks

Director, Office of Trade Adjustment Assistance.

APPENDIX

Petitioner (Union/Workers/Firm)	Location	Date received	Date of petition	Petition No.	Articles Produced
Sunshine Shake & Shingle Co. (Wkrs)	Forks, WA	07/13/92	07/06/92	27,476	Cedar Shakes and Shingles.
Laser Magnetic Storage Int'l Co. (Wkrs)	Norristown, PA	07/13/92	06/25/92	27,477	Information Storage Devices.
Breed Automotive Mfg., Inc. (Co)	Boonton Township, NJ	07/13/92	06/24/92	27,478	Airbag Sensors.
Kneat Knits (Wkrs)	Allentown, PA	07/13/92	06/30/92	27,479	Ladies Knit Sportswear and Dresses.
Conoco, Inc. (Wkrs)	New Orleans, LA	07/13/92	06/30/92	27,480	Exploration & Production of Gas & Oil.
Drexel Oilfield Services (Co)	Conroe, TX	07/13/92	07/03/92	27,481	Oilfield Equipment.
Elk Brand Manufacturing (Wkrs)	Hopkinsville, KY	07/13/92	06/30/92	27,482	Men's, Womens' Jeans, Shorts, Slacks.
Ricke Knitting Mills, Inc. (Wkrs)	Maspeth, NY	07/13/92	06/08/92	27,483	Knitwear—Men's and Women's

APPENDIX—Continued

Petitioner (Union/Workers/Firm)	Location	Date received	Date of petition	Petition No.	Articles Produced
Estoril Producing Corp. (Co)	Midland, TX	07/13/92	06/30/92	27,484	Oil and Gas.
Sunstrand Advanced Technology Group (Wkrs)	Denver, CO	07/13/92	07/01/92	27,485	Aircraft Parts.
Milroy Wood Products (Wkrs)	Milroy, PA	07/13/92	06/29/92	27,486	Cabinets and Closet Organizers.
American Tree Co. (Co)	Lexington, KY	07/13/92	07/02/92	27,487	Artificial Christmas Trees, Wreaths.
Unocal Corp., Mid Continent Reg. (Co)	Oklahoma City, OK	07/13/92	07/01/92	27,488	Oil and Gas.
Unocal Corp., Rocky Mtn. District (Co)	Casper, WY	07/13/92	07/01/92	27,489	Oil and Gas.
Unocal Corp., Southern Mid-Cont. (Co)	Woodward, OK	07/13/92	07/01/92	27,490	Oil and Gas.
Unocal Corp., Northern Mid-Cont. (Co)	East Lansing, MI	07/13/92	07/01/92	27,491	Oil and Gas.

[FR Doc. 92-17529 Filed 7-23-92; 8:45 am]

BILLING CODE 4510-30-M

Emergency Unemployment Compensation Program; Changes in Emergency Unemployment Compensation Periods

This notice announces the recent extension of the Emergency Unemployment Compensation Program and changes in benefit period durations.

Background

The Emergency Unemployment Compensation (EUC) Amendments of 1992 (P.L. 102-318) enacted on July 3, 1992 which extended the EUC Act of 1991 (P.L. 102-164), increases the maximum number of EUC weeks payable to either 20 or 26 weeks, from 13 or 20 weeks, depending on the level of unemployment in a State for claimants filing initial claims after June 13, 1992. Under the EUC Act of 1991 as amended by the Unemployment Compensation Amendments of 1992, the benefit durations will drop to 10 and 15 weeks, depending on the level of unemployment in the State when the seasonally adjusted national rate of total unemployment is at least 6.8 percent, but less than 7.0 percent for two consecutive months. When the seasonally adjusted national rate of total unemployment is less than 6.8 percent for two consecutive months, benefit durations will drop to 7 and 12 weeks depending on the State unemployment level.

The number of weeks of benefits available in a State is determined by certain trigger values. The higher number of weeks is available when a State's adjusted insured unemployment rate (AIUR) equals or exceeds 5 percent or the average total unemployment rate (ATUR) equals or exceeds 9 percent. New claims for EUC may not be filed after March 6, 1993 and no EUC is payable for any weeks beginning after June 19, 1993.

The EUC amendments of 1992 increased the duration of benefits from 20 weeks to 26 weeks for the week beginning June 14, 1992, in Alaska, California, Connecticut, Idaho, Maine, Massachusetts, Michigan, New Jersey, New York, Oregon, Pennsylvania, Puerto Rico, Rhode Island, Vermont, Washington, and West Virginia; and increased from 13 weeks to 20 weeks in Alabama, Arizona, Arkansas, Colorado, Delaware, District of Columbia, Florida, Georgia, Hawaii, Illinois, Indiana, Iowa, Kansas, Kentucky, Louisiana, Maryland, Minnesota, Mississippi, Missouri, Montana, Nebraska, Nevada, New Hampshire, New Mexico, North Carolina, North Dakota, Ohio, Oklahoma, South Carolina, South Dakota, Tennessee, Texas, Utah, Virgin Islands, Virginia, Wisconsin, and Wyoming. Washington dropped from 26 weeks to 20 weeks for the week beginning July 5, 1992 and New York dropped from 26 weeks to 20 weeks for the week beginning July 12, 1992.

Information for Claimants

The duration of benefits payable in the EUC period, and the terms and conditions on which they are payable, are governed by the Act and the operating instructions issued to the States by the U.S. Department of Labor. The State employment security agency will furnish a written notice of potential entitlement to each individual who has exhausted all rights to regular benefits and is potentially eligible for EUC benefits (20 CFR 615.13(c)).

Persons who believe they may be entitled to EUC benefits, or who wish to inquire about their rights under the program, should contact the nearest State employment service office or unemployment compensation claims office in their locality.

Signed at Washington, DC, on July 17, 1992.

Roberts T. Jones,

Assistant Secretary of Labor.

[FR Doc. 92-17512 Filed 7-23-92; 8:45 am]

BILLING CODE 4510-30-M

Occupational Safety and Health Administration

Wyoming State Standards; Notice of Approval

Background

Part 1953 of title 29, Code of Federal Regulations, prescribes procedures under section 18 of the Occupational Safety and Health Act of 1970 (hereinafter called the Act) by which the Regional Administrator for Occupational Safety and Health (hereinafter called the Regional Administrator) under delegation of authority from the Assistant Secretary of Labor for Occupational Safety and Health (hereinafter called the Assistant Secretary), (29 CFR 1953.4 will review and approve standards promulgated pursuant to a State Plan which has been approved in accordance with section 18(c) of the Act and 29 CFR part 1902. On May 3, 1974, notice was published in the **Federal Register** (39 FR 15394) of the approval of the Wyoming Plan and adoption of subpart BB to part 1952 containing the decision.

The Plan provides for the adoption of Federal Standards as State Standards by:

(1) Advisory Committee coordination;

(2) Publication in newspapers of general/major circulation with a 45-day waiting period for public comment and hearings;

(3) Adoption by the Wyoming Health and Safety Commission;

(4) Review and approval by the Governor;

(5) Filing with Secretary of State and designation of an effective date.

OSHA regulations (29 CFR part 1953, 22 and 23) require that States respond to the adoption of new or revised permanent Federal Standards by State promulgation of comparable standards within six months of OSHA publication in the **Federal Register**, and within 30 days for emergency temporary standards. Although adopted State Standards or revisions to standards must be submitted for OSHA review

and approval under procedures set forth in part 1953, they are enforceable by the State prior to Federal review and approval.

By letter dated June 3, 1992 from Stephan R. Foster, OSHA Program Manager, Wyoming Department of Employment, Division of Employment Affairs-OSHA, to Byron R. Chadwick, OSHA Regional Administrator, the State submitted rules and regulations in response to the following Federal OSHA Construction Standards (29 CFR 1926.450, .452 Scaffolding; Final rule, 55 FR 47687, 11/14/90; 29 CFR 1926.500, .501 Floor and Wall Openings; Final Rule, 55 FR 47687, 11/14/90; 29 CFR 1926.1050–1054, .1060 Stairways and Ladders, 55 FR 47687, 11/14/90; 29 CFR 1926.700–706 Concrete and Masonry Construction; Final Rule, FR 55 42328, 10/18/90). By letter dated April 7, 1992, from Stephan R. Foster, OSHA Program Manager, the State submitted rules and regulations in response to the following Federal OSHA General Industry Standards (29 CFR 1910.120: Hazardous Waste Operations and Emergency Response; Final Rule; Corrections, 55 FR 14073, 4/13/90; 29 CFR 1928.110: Field Sanitation; 52 FR 16095, 5/1/87; 29 CFR 1910.147 Control of Hazardous Energy Sources (Lockout/Tagout); Final Rule: corrections and technical amendments, 55 FR 38677, 9/20/90; 29 CFR 1910.251–257 Safety and Health Standards: Welding, Cutting and Brazing; Final Rule, 55 FR 13696, 4/11/90; 29 CFR 1910.26, .67, .68, .94, .103, .106, .110, .178, .179, .180, .181, .252, .261, .265, .266, .304, .331–335, .399 Electrical Safety-Related Work Practices; Final Rule, 55 FR 32014, 9/6/90; 29 CFR 1910.1450 Occupational Exposures to Hazardous Chemicals in Laboratories; Final Rule, 55 FR 3327, 1/31/90).

The above adoptions of Federal Standards have been incorporated in the State Plan and are contained in the Wyoming Occupational Health and Safety Rules and Regulations as required by Wyoming Statute 1977, Section 27–11–105(a)(viii).

State Standards for 29 CFR 1926.450, .452 Scaffolding; Final Rule were adopted by the Health and Safety Commission of Wyoming on February 22, 1991 (effective April 4, 1991); State Standards for 29 CFR 1926.500, .501 Floor and Wall Openings; Final Rule were adopted by the Health and Safety Commission of Wyoming on February 22, 1991 (effective April 4, 1991); State Standards for 29 CFR 1926.1050–1054, .1060 Stairways and Ladders were adopted by the Health and Safety Commission of Wyoming on February 22, 1991 (effective April 4, 1991); State Standards for 29 CFR 1926.700, .705 Concrete and Masonry Construction Safety Standards; Lift-Slab Construction Operation; Final Rule were adopted on February 22, 1991 (effective April 4, 1991); State Standards for 29 CFR 1910.120 Hazardous Waste Operations and Emergency Response; Final Rule; Corrections were adopted on August 2, 1991 (effective 9/27/91); State Standards for 29 CFR 1928.110 Field Sanitation were adopted on February 22, 1991 (effective 4/4/91); State Standards for 29 CFR 1910.147 Control of Hazardous Energy Sources (Lockout/Tagout); Final Rule, corrections and technical amendments were adopted by the Health and Safety Commission of Wyoming on February 22, 1991 (effective 4/4/91); 29 CFR 1910.251–257 Safety and Health Standards: Welding, Cutting and Brazing; Final Rule were adopted by the Health and Safety Commission of Wyoming on February 22, 1991 (effective 4/4/91; State Standards for 29 CFR 1910.26, .67, .68, .94, .103, .106, .110, .178, .179, .180, .181, .252, .261, .265, .266, .304, .331–335, .399 Electrical Safety-Related Work Practices were adopted by the Health and Safety Commission of Wyoming on October 12, 1990 (effective 11/26/90); State Standards for 29 CFR 1910.1450 Occupational Exposures to Hazardous Chemicals in Laboratories were adopted by the Health and Safety Commission of Wyoming on June 15, 1990 (effective 7/5/90). Adoption of all these Standards was pursuant to Wyoming Statute 1977, Section 27–11–105.

Decision

The above State Standards have been reviewed and compared with the relevant Federal Standards, and OSHA has determined that the State Standards are at least as effective as the comparable Federal Standards, as required by section 18(c)(2) of the Act. OSHA has also determined that the differences between the State and Federal Standards are minimal and that the Standards are thus substantially identical. OSHA therefore approves these standards. However, the right to reconsider this approval is reserved should substantial objections be submitted to the Assistant Secretary.

Location of Supplement for Inspection and Copying

A copy of the Standards Supplements, along with the approved Plan, may be inspected and copied during normal business hours at the following locations: Office of the Regional Administrator, room 1576 Federal Office Building, 1961 Stout Street, Denver, Colorado 80294; the Department of Employment, Division of Employment Affairs—OSHA, Herschler Building, 2nd Floor East, 122 West 25th Street, Cheyenne, Wyoming 82002; and the Office of State Programs, room N–3700, 200 Constitution Avenue, NW., Washington, DC 20210.

Public Participation

Under 29 CFR 1953.2(c), the Assistant Secretary may prescribe alternative procedures, or show any other good cause consistent with applicable laws, to expedite the review process. The Assistant Secretary finds that good cause exists for not publishing the supplements to the Wyoming State Plan as a proposed change and makes the Regional Administrator's approval effective upon publication for the following reason(s): The Standards were adopted in accordance with the procedural requirements of State law which include public comment, and further public participation would be repetitious. This decision is effective July 24, 1992.

Authority: Sec. 18, Pub. L. 91–596, 84 Stat. 1608 (29 U.S.C. 667).

Signed at Denver, Colorado this 1st day of July, 1992.

Byron R. Chadwick,

Regional Administrator, VIII.

[FR Doc. 92–17555 Filed 7–23–92; 8:45 am]

BILLING CODE 4510–26–M

Employment Standards Administration

Wage and Hour Division

Minimum Wages for Federal and Federally Assisted Construction; General Wage Determination Decisions

General wage determination decisions of the Secretary of Labor are issued in accordance with applicable law and are based on the information obtained by the Department of Labor from its study of local wage conditions and data made available from other sources. They specify the basic hourly wage rates and fringe benefits which are determined to be prevailing for the described classes of laborers and mechanics employed on construction projects of a similar character and in the localities specified therein.

The determinations in these decisions of prevailing rates and fringe benefits have been made in accordance with 29 CFR part 1, by authority of the Secretary of Labor pursuant to the provisions of the Davis-Bacon Act of March 3, 1931, as amended (46 Stat. 1494, as amended, 40 U.S.C. 276a) and of other Federal statutes referred to in 29 CFR part 1,

appendix, as well as such additional statutes as may from time to time be enacted containing provisions for the payment of wages determined to be prevailing by the Secretary of Labor in accordance with the Davis-Bacon Act. The prevailing rates and fringe benefits determined in these decisions shall, in accordance with the provisions of the foregoing statutes, constitute the minimum wages payable on Federal and federally assisted construction projects to laborers and mechanics of the specified classes engaged on contract work of the character and in the localities described therein.

Good cause is hereby found for not utilizing notice and public comment procedure thereon prior to the issuance of these determinations as prescribed in 5 U.S.C. 553 and not providing for delay in the effective date as prescribed in that section, because the necessity to issue current construction industry wage determinations frequently and in large volume causes procedures to be impractical and contrary to the public interest.

General wage determination decisions, and modifications and supersedeas decisions thereto, contain no expiration dates and are effective from their date of notice in the **Federal Register**, or on the date written notice is received by the agency, whichever is earlier. These decisions are to be used in accordance with the provisions of 29 CFR parts 1 and 5. Accordingly, the applicable decision, together with any modifications issued, must be made a part of every contract for performance of the described work within the geographic area indicated as required by an applicable Federal prevailing wage law and 29 CFR part 5. The wage rates and fringe benefits, notice of which is published herein, and which are contained in the Government Printing Office (GPO) document entitled "General Wage Determinations Issued Under The Davis-Bacon And Related Acts," shall be the minimum paid by contractors and subcontractors to laborers and mechanics.

Any person, organization, or governmental agency having an interest in the rates determined as prevailing is encouraged to submit wage rate and fringe benefit information for consideration by the Department. Further information and self-explanatory forms for the purpose of submitting this data may be obtained by writing to the U.S. Department of Labor, Employment Standards Administration, Wage and Hour Division, Division of Wage Determinations, 200 Constitution Avenue, NW., room S-3014, Washington, DC 20210.

New General Wage Determination Decisions

The numbers of the decisions added to the Government Printing Office document entitled "General Wage Determinations Issued Under the Davis-Bacon and Related Acts" are listed by Volume, State, and page numbers(s).

Volume II

Indiana, IN91-19 (July 24, 1992). p. 352a.

Modifications to General Wage Determination Decisions

The numbers of the decisions listed in the Government Printing Office document entitled "General Wage Determinations Issued Under the Davis-Bacon and Related Acts" being modified are listed by Volume, State, and page number(s). Dates of publication in the **Federal Register** are in parentheses following the decisions being modified.

Volume I

Maryland:
- MD91-1 (Feb. 22, 1991) ..... p. All.
- MD91-26 (Feb. 22, 1991) ..... p. All.
- MD91-31 (Feb. 22, 1991) ..... p. All.

Pennsylvania:
- PA91-1 (Feb. 22, 1991) ..... p. 953, pp. 954, 956-957.
- PA91-2 (Feb. 22, 1991) ..... p. 965, pp. 966-968.
- PA91-3 (Feb. 22, 1991) ..... p. 979, pp. 980-981.
- PA91-4 (Feb. 22, 1991) ..... p. 985, p. 986.
- PA91-16 (Feb. 22, 1991) ..... p. 1077, p. 1078.
- PA91-17 (Feb. 22, 1991) ..... p. 1079.
- PA91-18 (Feb. 22, 1991) ..... p. 1085, pp. 1086, 1088.
- PA91-20 (Feb. 22, 1991) ..... p. 1099, pp. 1100, 1103.
- PA91-22 (Feb. 22, 1991) ..... p. 1111, pp. 1112-1117.

West Virginia, WV91-2 (Feb. 22, 1991). p. 1421, pp. 1422, 1424, 1430.

Volume II

Illinois:
- IL91-16 (Feb. 22, 1991) ..... p. 215, pp. 218, 219, 224a.
- IL91-18 (Feb. 22, 1991) ..... p. All.

Indiana:
- IN91-3 (Feb. 22, 1991) ..... p.279, pp.283-284.
- IN91-4 (Feb. 22, 1991) ..... p. 291, pp. 297-298.

Kansas:
- KS91-9 (Feb. 22, 1991) ..... p. All.

Michigan:
- MI91-7 (Feb. 22, 1991) ..... p. 515, pp. 518-522.

Minnesota:
- MN91-7 (Feb. 22, 1991) ..... p. 587, pp. 592-606a.
- MN91-8 (Feb. 22, 1991) ..... p. 607, p. 612.

Volume III

California:
- CA91-2 (Feb. 22, 1991) ..... p. All.
- CA91-4 (Feb. 22, 1991) ..... p. All.

Oregon:
- OR91-1 (Feb. 22, 1991) ..... p. All.

Utah:
- UT91-2 (Feb. 22, 1991) ..... p. All.

General Wage Determination Publication

General wage determinations issued under the Davis-Bacon and related Acts, including those noted above, may be found in the Government Printing Office (GPO) document entitled "General Wage Determinations Issued Under the Davis-Bacon And Related Acts". This publication is available at each of the 50 Regional Government Depository Libraries and many of the 1,400 Government Depository Libraries across the country. Subscriptions may be purchased from: Superintendent of Documents, U.S. Government Printing Office, Washington, DC 20402, (202) 783-3238.

When ordering subscription(s), be sure to specify the State(s) of interest, since subscriptions may be ordered for any or all of the three separate volumes, arranged by State. Subscriptions include an annual edition (issued on or about January 1) which includes all current general wage determinations for the States covered by each volume. Throughout the remainder of the year, regular weekly updates will be distributed to subscribers.

Signed at Washington, DC this 17th day of July 1992.

Alan L. Moss,

Director, Division of Wage Determinations.

[FR Doc. 92-17325 Filed 7-23-92; 8:45 am]

BILLING CODE 4510-27-M

Pension and Welfare Benefits Administration

Assessment of Civil Penalties for Failure to File Timely Annual Return/Reports—Top Hat Plans and Pre-Grace Period Late Filers

The purpose of this notice is to provide further guidance on the Department of Labor's (PWBA) expanded program for assessing civil penalties, under section 502(c)(2) of the

Employee Retirement Income Security Act (ERISA), for failing to file timely annual return/reports (Form 5500 Series). The guidance provided in this notice describes the circumstance under which administrators of "top hat" pension plans and administrators who filed late annual return/reports prior to March 23, 1992, may take advantage of the Department's previously announced grace period for filing annual reports.

Background

On April 20, 1992, the Department published a notice in the **Federal Register** (57 FR 14436) announcing an expanded program for assessing civil penalties under ERISA section 502(c)(2), which may be up to $1,000 a day, against plan administrators who fail to file timely annual return/reports. In the same notice, the Department also announced that for a limited time period (March 23, 1992 until September 30, 1992) plan administrators who voluntarily file overdue annual reports in accordance with the conditions set forth in the notice will be assessed only $50 per day up to a maximum of $1,000 per filing.

Top Hat Pension Plans

Since the issuance of the April 20, 1992 notice, the Department has received a number of inquiries as to whether administrators of unfunded or insured pension plans maintained by an employer for a "select group of management or highly compensated employees" (commonly referred to as "top hat" plans) may file the statement described in 29 CFR 2520.104–23(b) rather than annual return/reports for 1988 and subsequent plan years for purposes of taking advantage of the reduced penalties for voluntary compliance during the Department's announced grace period.

Section 2520.104–23 relieves administrators of unfunded or insured top hat pension plans (described in paragraph (d) of that regulation) from the reporting and disclosure requirements of part 1 of title I of ERISA, including the requirement to file annual return/reports, if, among other things, the administrator of the plan files a statement with the Secretary of Labor that includes: the name and address of the employer; the employer identification number (EIN) assigned by the Internal Revenue Service; a declaration that the employer maintains a plan or plans primarily for the purpose of providing deferred compensation for a select group of management or highly compensated employees, and a statement of the number of such plans and the number of employees in each. This statement is required to be filed within 120 days after the plan becomes subject to part 1 of title I of ERISA. To the extent that a plan administrator fails to comply with any of the conditions for the prescribed alternative method of compliance, such as failing to file a timely statement, the administrator may not avail himself of the relief afforded by the alternative and, therefore, must comply with all applicable reporting and disclosure requirements under part 1 of title I of ERISA.

The Department has determined that it will not seek to enforce the compliance with annual reporting provisions of title I of ERISA by requiring administrators of top hat pension plans to file Form 5500 Series Annual Return/Reports for plan years 1988 and later, provided that:

1. The plan is an unfunded or insured top hat pension eligible for the alternative method of compliance described in § 2520.104–23;

2. The statement described in paragraph (b)(1) of § 2520.104–23 is filed with the Department on or before September 30, 1992; and

3. The statement is accompanied by the payment of a civil penalty in the amount of the lesser of: $50 per day for each day following the date on which an annual report was due (including any extensions) for such plan, or $1,000 per plan.

Administrators of top hat plans who have not filed timely statements in accordance with § 2520.104–23, but file such statements in accordance with the conditions set forth above shall be deemed to have elected compliance with the alternative method of compliance prescribed in § 2520.104–23 for the 1988 and all subsequent plan years with respect to such plans. Administrators of top hat plans who have not previously satisfied the conditions for the alternative method of compliance prescribed in § 2520.104–23 and who do not file statements in accordance with the conditions set forth above, are required to comply with all applicable reporting and disclosure requirements and may be assessed civil penalties under title I of ERISA for any failures or refusals to do so.

The Department notes that acceptance of the above described statements and penalty amounts is not a determination by the Department with respect to the status of the arrangement as a plan or particular type of plan (e.g., multiple employer welfare arrangement, "top hat" plan etc.) under title I of ERISA.

Pre-March 23, 1992 Late Filers

The Department also has received a number of inquiries concerning whether administrators who filed late annual return/reports prior to the March 23, 1992 commencement of the Department's announced grace period may avail themselves of the reduced penalties applicable to filings made during the grace period, rather than the higher penalties applicable to such filings.

The Department has decided to afford administrators who, prior to March 23, 1992, filed late annual return/reports for the 1988 and later plan years (i.e., reports filed after the due date of the return/report, including any extensions) the opportunity to take advantage of the reduced penalties applicable to late filings. In this regard, any administrator who filed a late 1988 or later plan year annual return/report prior to March 23, 1992 may avoid assessment of otherwise applicable civil penalties under ERISA section 502(c)(2) for such late filings if:

1. On or before September 30, 1992, a copy of each late filed annual return/report is sent to the Department; and

2. Each late annual/return report is accompanied by the payment of a civil penalty in the amount of the lesser of: $50 per day per annual return/report for each day the return/report was filed after the due date of the return/report, including any extensions, or $1,000 per annual return/report.

Copies of any annual return/reports sent to the Department must be a complete copy of the actual return/report filed with the Internal Revenue Service and must have an original signature.

The Department notes that the payment of the foregoing civil penalties only serves to avoid the assessment of otherwise applicable higher civil penalties for filing late annual return/reports. Payment of such penalties does not serve to reduce, abate, or otherwise mitigate civil penalties which may be or have been assessed for annual reports which are determined to be deficient.

Where to File

Copies of statements, annual return/reports and checks for the penalty amount, made payable to the U.S. Department of Labor, must be sent to:
Pension and Welfare Benefits Administration P.O. Box 75212
Washington, DC 20013–5212

Waivers and Penalties

Payment of penalties in accordance with the foregoing will constitute a waiver of the right both to receive notice of assessment from the Department and

to contest the Department's assessment of the above described penalty amounts. Payment of the penalties described herein does not foreclose the imposition of penalties by the Internal Revenue Service for non-filed and late-filed annual return/reports.

Annual return/reports filed in accordance with the foregoing are subject to edit checks and reviews. Plan administrators will be given an opportunity to correct identified deficiencies in accordance with the procedures described at 29 CFR 2560.502c-2 and 2570.60 *et seq.* Uncorrected deficiencies may result in the assessment of additional penalties.

FOR FURTHER INFORMATION CONTACT: Janet Powell, Division of Reporting Compliance, Office of the Chief Accountant, (202) 523-8667 (not a toll-free number).

Signed at Washington, DC, this 20th day of July, 1992.

Alan D. Lebowitz,

Deputy Assistant Secretary for Program Operations, Pension, and Welfare Benefits Administration, U.S. Department of Labor.

[FR Doc. 92-17516 Filed 7-23-92; 8:45 am]

BILLING CODE 4510-29-M

NATIONAL COMMISSION ON AMERICA'S URBAN FAMILIES

Notice of Meeting

Notice is hereby given, pursuant to Public Law 92-463, that the National Commission on America's Urban Families will hold a meeting and hearing in New York City the evening of Wednesday, August 5 and Thursday August 6, 1992. For exact time and location of the meeting and hearing please contact the Commission two days prior to the event at 202-690-6462.

The purpose of the hearing is to enable invited participants to express their views on the conditions of America's urban families and inform the Commission about programs and approaches that work to strengthen families.

Records shall be kept of all Commission proceedings and shall be available for public inspection at 200 Independence Avenue, SW., room 305-F, Washington, DC 20201.

Anna Kondratas,

Executive Director.

[FR Doc. 92-17496 Filed 7-23-92; 8:45 am]

BILLING CODE 4150-04-M

NATIONAL CREDIT UNION ADMINISTRATION

Public Information Collection Requirement Submitted to OMB for Review

Date: July 13, 1992.

The National Credit Union Administration has submitted the following public information collection requirement to OMB for review and clearance under the Paperwork Reduction Act of 1980, Pub. L. 96-511. Copies of the submissions may be obtained by calling the NCUA Clearance Officer listed. Comments regarding information collections should be addressed to the OMB reviewer listed and to the NCUA Clearance Officer, NCUA, Administrative Office, Room 7344, 1776 G Street, Washington, DC 20456.

National Credit Union Administration

OMB Number: 3133-0098
Form Number: None
Type of Review: Reinstatement of a previously approved collection for which approval has expired
Title: Accuracy of Advertising/Notice of Termination of Excess Share Insurance
Description: Federally insured credit union which offer or provide excess share insurance coverage must advertise the fact and if the nonfederal excess share insurance is terminated, members must be notified
Respondents: Federally credit unions
Estimated Number of Respondents: 1,515
Estimated Burden Hours per Response: .51 hours
Frequency of Response: On occasion
Estimated Total Reporting Burden: 780

OMB Number: 3133-0099
Form Number: None
Type of Review: Reinstatement of a previously approved collection for which approval has expired
Title: Notice of Voluntary Termination or Conversion of Insured Status
Description: This information is needed to notify credit union members that their accounts are no longer federally insured and to provide information to the members of the replacement share insurer
Respondents: Federally insured credit unions
Estimated Number of Respondents: 15
Estimated Burden Hours per Response: .25 hours
Frequency of Response: One time
Estimated Total Reporting Burden: 3,750

OMB Number: 3133-0116
Form Number: NCUA 9600, NCUA 4401, NCUA 4221, NCUA 4505, and NCUA 4506
Type of Review: Reinstatement of a previously approved collection for which approval has expired
Title: Conversion from Federal to State Credit Union and from State to Federal Credit Union/Insurance of Member Accounts—Eligibility
Description: Application for approval of credit union conversion from federal to state charter and from state to federal charter. In addition, forms in this package contain application and approval for federal insurance of member accounts in credit unions
Respondents: Federally insured credit unions
Estimated Number of Respondents: 50
Estimated Burden Hours per Response: 4 hours
Frequency of Response: One time
Estimated Total Reporting Burden: 200

OMB Number: None
Form Number: None
Type of Review: New Collection
Title: Corporate Credit Union Regulation, parts 704 and 741
Description: There are 44 corporate credit unions. This regulation requires additional information and a maintenance of documentation for federally insured corporate credit unions.
Respondents: Federally insured corporate credit unions
Estimated Number of Respondents: 44
Estimated Burden Hours per Response: 96 hours
Frequency of Response: Record keeping
Estimated Total Reporting Burden: 4,224

OMB Number: None
Form Number: None
Type of Review: New Collection
Title: Written Reimbursement Policy, Board of Directors' Vote, Annual Meeting Disclosure
Description: These sections are necessary to ensure reimbursements are made within the bounds of safety and soundness after careful consideration by the board of directors acting within self-imposed guidelines. The written requirements will aid efficient examinations and NCUA monitoring
Respondents: Federal credit union boards
Estimated Number of Respondents: 8,229
Estimated Burden Hours per Response: 4.5 hours
Frequency of Response: Annual record keeping
Estimated Total Reporting Burden: 37,030

Clearance Officer: Wilmer A. Theard, (202) 682-9700, National Credit Union Administration, Room 7344, 1776 G Street, NW., Washington, DC 20456.

OMB Reviewer: Gary Waxman, (202) 395-7340, Office of Management and Budget, Room 3208, New Executive Office Building, Washington, DC 20503.

Becky Baker

Secretary of the NCUA Board.

[FR Doc. 92-17455 Filed 7-23-92; 8:45 am]

BILLING CODE 7535-01-M

NATIONAL FOUNDATION ON THE ARTS AND THE HUMANITIES

Agency Information Collection Activities Under OMB Review

AGENCY: National Endowment for the Arts, NFAH.

ACTION: Notice.

SUMMARY: The National Endowment for the Arts (NEA) has sent to the Office of Management and Budget (OMB) a request for clearance of the following proposal for the collection of information under the provisions of the Paperwork Reduction Act (44 U.S.C. chapter 35).

DATES: Comments on this information collection must be submitted by August 24, 1992.

ADDRESSES: Send comments to Mr. Steve Semenuk, Office of Management and Budget, New Executive Office Building, 726 Jackson Place, NW., room 3002, Washington, DC 20503; (202-395-7316). In addition, copies of such comments may be sent to Ms. Judith E. O'Brien, National Endowment for the Arts, Administrative Services Division, room 203, 1100 Pennsylvania Avenue, NW., Washington, DC, 20506; (202-682-5401).

FOR FURTHER INFORMATION CONTACT: Ms. Judith E. O'Brien, National Endowment for the Arts, Administrative Services Division, room 203, 1100 Pennsylvania Avenue, NW., Washington, DC 20506; (202-682-5401).

SUPPLEMENTARY INFORMATION: The Endowment requests the review of a revision of a currently approved collection of information. This entry is issued by the Endowment and contains the following information:

(1) The title of the form; (2) how often the required information must be reported; (3) who will be required or asked to report; (4) what the form will be used for; (5) an estimate of the number of responses; (6) the average burden hours per response; (7) an estimate of the total number of hours needed to prepare the form. This entry is not subject to 44 U.S.C. 3504(h).

Title: FY 94 Locals Program Application Guidelines.

Frequency of Collection: One-time.

Respondents: State or local governments, non-profit organizations.

Use: Guideline instructions and applications elicit relevant information from local and state arts agencies, statewide assemblies of local arts agencies, national service organizations, and educational institutions that apply for funding under specific Locals Program categories. Information is necessary for the accurate, fair and thorough consideration of competing proposals in the peer review process.

Estimated Number of Respondents: 325.

Average Burden Hours per Response: 14.

Total Estimated Burden: 4,600.

Judith E. O'Brien,

Management Analyst, Administrative Services Division, National Endowment for the Arts.

[FR Doc. 92-17470 Filed 7-23-92; 8:45 am]

BILLING CODE 7537-01-M

NATIONAL SCIENCE FOUNDATION

Collection of Information Submitted for OMB Review

In accordance with the Paperwork Reduction Act and OMB Guidelines, the National Science Foundation is posting a notice of information collections that will affect the public. Interested persons are invited to submit comments by August 7, 1992. Comments may be submitted to:

(A) *Agency Clearance Officer.* Herman G. Fleming, Division of Personnel and Management, National Science Foundation, Washington, DC 20550, or by telephone (202) 357-7335, and to:

(B) *OMB Desk Officer.* Office of Information and Regulatory Affairs, ATTN: Dan Chenok, Desk Officer, OMB, 722 Jackson Place, room 3208, NEOB, Washington, DC 20503.

Title: Antarctic Questionnaire.

Affected Public: Individuals.

Respondents/Reporting Burden: 1000 respondents; 6 minutes per response.

Abstract: The National Science Foundation has funded a research project for which the investigator needs to interview individuals who have been to the Antarctic regarding their experiences there. This questionnaire will allow volunteers to be identified for an interview, while protecting the privacy of those who do not wish to participate.

Dated: July 21, 1992.

Herman G. Fleming,

Reports Clearance Officer.

[FR Doc. 92-17535 Filed 7-23-92; 8:45 am]

BILLING CODE 7555-01-M

NUCLEAR REGULATORY COMMISSION

Advisory Committee on Reactor Safeguards Subcommittee on Control and Electrical Power Systems; Meeting

The ACRS Subcommittee on Control and Electrical Power Systems will hold a meeting on August 4, 1992, in room P-110, 7929 Norfolk Avenue, Bethesda, MD.

The entire meeting will be open to public attendance.

The agenda for the subject meeting shall be as follows:

Tuesday, August 4, 1992—1 p.m. until 4 p.m.

The Subcommittee will review the proposed Supplement 1 to Generic Letter 83-28, "Required Actions Based on Generic Implications of Salem ATWS Events," and an associated Differing Professional Opinion filed by Charles Morris, NRC Office of Nuclear Reactor Regulation (NRR).

Oral statements may be presented by members of the public with the concurrence of the Subcommittee Chairman; written statements will be accepted and made available to the Committee. Recordings will be permitted only during those portions of the meeting when a transcript is being kept, and questions may be asked only by members of the Subcommittee, its consultants, and staff. Persons desiring to make oral statements should notify the ACRS staff member named below as far in advance as is practicable so that appropriate arrangements can be made.

During the initial portion of the meeting, the Subcommittee, along with any of its consultants who may be present, may exchange preliminary views regarding matters to be considered during the balance of the meeting.

The Subcommittee will then hear presentations by and hold discussions with representatives of the NRC staff, its consultants, and other interested persons regarding this review.

Further information regarding topics to be discussed, the scheduling of sessions open to the public, whether the meeting has been cancelled or rescheduled, the Chairman's ruling on requests for the opportunity to present oral statements and the time allotted

therefor can be obtained by a prepaid telephone call to the cognizant ACRS staff engineer, Mr. Paul Boehnert (telephone 301/492-8558) between 7:30 a.m. and 4:15 p.m. (e.s.t.). Persons planning to attend this meeting are urged to contact the above named individual one or two days before the scheduled meeting to be advised for any changes in schedule, etc., that may have occurred.

Dated: July 17, 1992.

Sam Duraiswamy,

Chief, Nuclear Reactors Branch.

[FR Doc. 92-17521 Filed 7-23-92; 8:45 am]

BILLING CODE 7590-01-M

Advisory Committee on Reactor Safeguards Joint Meeting of the Subcommittees on Decay Heat Removal Systems and Advanced Boiling Water Reactors; Meeting

The ACRS Subcommittees on Decay Heat Removal Systems and Advanced Boiling Water Reactors will hold a joint meeting on August 5, 1992, room P-110, 7920 Norfolk Avenue, Bethesda, MD.

The meeting will be open to public attendance, with the exception of a portion that may be closed as necessary to discuss material deemed proprietary by General Electric Nuclear Energy.

The agenda for the subject meeting shall be as follows:

Wednesday, August 5, 1992—8:30 a.m. Until the Conclusion of Business

The Subcommittees will discuss Inspections, Tests, Analyses, and Acceptance Criteria (ITAAC) for selected systems related to General Electric Advanced Boiling Water Reactor (ABWR).

Oral statements may be presented by members of the public with the concurrence of the Subcommittee Chairman; written statements will be accepted and made available to the Committee. Recordings will be permitted only during those sessions of the meeting when a transcript is being kept, and questions may be asked only by members of the Subcommittee, its consultants, and staff. Persons desiring to make oral statements should notify the ACRS staff member named below as far in advance as is practicable so that appropriate arrangements can be made.

During the initial portion of the meeting, the Subcommittees, along with any of its consultants who may be present, may exchange preliminary views regarding matters to be considered during the balance of the meeting.

The Subcommittees will then hear presentations by and hold discussions with representatives of the NRC staff, General Electric Nuclear Energy, their consultants, and other interested persons regarding this review.

Further information regarding topics to be discussed, the scheduling of sessions open to the public, whether the meeting has been cancelled or rescheduled, the Chairman's ruling on requests for the opportunity to present oral statements and the time allotted therefor can be obtained by a prepared telephone call to the cognizant ACRS staff member, Mr. Paul Boehnert (telephone 301/492-8558) between 7:30 a.m. and 4:15 p.m. (E.S.T.). Persons planning to attend this meeting are urged to contact the above named individual one or two days before the scheduled meeting to be advised of any changes in schedule, etc., that may have occurred.

Dated: July 17, 1992.

Sam Duraiswamy,

Chief, Nuclear Reactors Branch.

[FR Doc. 92-17522 Filed 7-23-92; 8:45 am]

BILLING CODE 7590-01-M

Advisory Committee on Reactor Safeguards and Advisory Committee on Nuclear Waste; Proposed Meetings

In order to provide advance information regarding proposed public meetings of the ACRS Subcommittees and meetings of the ACRS full Committee, of the ACNW, and the ACNW Working Groups the following preliminary schedule is published to reflect the current situation, taking into account additional meetings that have been scheduled and meetings that have been postponed or cancelled since the last list of proposed meetings was published June 22, 1992 (57 FR 27802). Those meetings that are firmly scheduled have had, or will have, an individual notice published in the **Federal Register** approximately 15 days (or more) prior to the meeting. It is expected that sessions of ACRS and ACNW full Committee meetings designated by an asterisk (*) will be closed in whole or in part to the public. The ACRS and ACNW full Committee meetings begin at 8:30 a.m. and ACRS Subcommittee and ACNW Working Group meetings usually begin at 8:30 a.m. The time when items listed on the agenda will be discussed during ACRS and ACNW full Committee meetings, and when ACRS Subcommittee and ACNW Working Group meetings will start will be published prior to each meeting. Information as to whether a meeting has been firmly scheduled, cancelled, or rescheduled, or whether changes have been made in the agenda for the August 1992 ACRS and ACNW full Committee meetings can be obtained by a prepaid telephone call to the Office of the Executive Director of the Committees (telephone: 301/492-4600 (recording) or 301/492-7288, Attn: Barbara Jo White) between 7:30 a.m. and 4:15 p.m., eastern time.

ACRS Subcommittee Meetings

Improved Light Water Reactors, July 27, 1992, Bethesda, MD. The Subcommittee will continue its review of the NRC staff's Final Safety Evaluation Report related to the Electric Power Research Institute's (EPRI's) requirements document for the evolutionary light water reactors.

Control and Electrical Power Systems, August 4, 1992 (1 p.m.—4 p.m.), Bethesda, MD. The Subcommittee will review the proposed Supplement 1 to Generic Letter 83-28, "Required Actions Based on Generic Implications of Salem ATWS Events," and an associated Differing Professional Opinion filed by Charles Morris, NRC Office of Nuclear Reactor Regulation (NRR).

Joint Decay Heat Removal Systems/ Advanced Boiling Water Reactors, August 5, 1992, Bethesda, MD. The Subcommittees will discuss Inspections, Tests, Analysis, and Acceptance Criteria (ITAAC) for selected systems related to General Electric Company (GE) Advanced Boiling Water Reactor (ABWR) plant.

Planning and Procedures, August 5, 1992, Bethesda, MD (3 p.m.—5:30 p.m.). The Subcommittee will discuss proposed ACRS activities and related matters. Qualifications of candidates nominated for appointment to the ACRS will also be discussed. Portions of this meeting will be closed to discuss information the release of which would represent a clearly unwarranted invasion of personal privacy.

Joint Plant Licensing Renewal/ Reliability and Quality, August 18, 1992 (1 p.m.—5 p.m.), Bethesda, MD. The Subcommittees will review the proposed Branch Technical Position on Equipment Qualification for Plant License Renewal.

Thermal Hydraulic Phenomena, August 18, 1992, Bethesda, MD. The Subcommittee will review the GE Nuclear Energy's generic program supporting power uprates for boiling water reactor plants and the NRC staff's Safety Evaluation Report that supports the power uprate for the Fermi Nuclear Power Plant, Unit 2.

Ad Hoc Subcommittee on Separate and Independent Requirements, August 19, 1992, Bethesda, MD—Cancelled.

Advanced Boiling Water Reactors, August 19, 1992, Bethesda, MD. The Subcommittee will discuss GE's and the NRC staff's responses to the issues included in the April 13, 1992 letter to the NRC Executive Director for Operations (EDO) regarding the Draft Safety Evaluation Reports for the GE Advanced Boiling Water Reactor design.

Computers in Nuclear Power Plant Operations, August 20–21, 1992, Bethesda, MD. The Subcommittee will continue its review of hardware and software issues for digital Instrumentation and Control (I&C) systems. National experts will discuss software design concepts including safety, reliability, fault-tolerance, formal methods, and verification and validation.

Joint Thermal Hydraulic Phenomena/ Core Performance, September 9, 1992, Bethesda, MD. The Subcommittees will continue the review of the issues pertaining to BWR core power stability.

Planning and Procedures, September 9, 1992, Bethesda, MD (1 p.m.— 4 p.m.). The Subcommittee will discuss proposed ACRS activities and related matters. Qualifications of candidates nominated for appointment to the ACRS will also be discussed. Portions of this meeting will be closed to discuss information the release of which would represent a clearly unwarranted invasion of personal privacy.

Computers in Nuclear Power Plant Operations, September 22, 1992, Bethesda, MD. The Subcommittee will host a special international meeting to hear directly from manufacturers in Germany, France, Japan, U.K., Sweden, and Canada about advanced developments in digital I&C systems.

Advanced Boiling Water Reactors, September 23–24, 1992, Bethesda, MD. The Subcommittee will begin its review of the Final Safety Evaluation Report (FSER) for the GE ABWR design, certain other GE and staff licensing documents, and the remainder of the Standard Safety Analysis Report (SSAR) submittals.

Advanced Pressurized Water Reactors, October 7, 1992, Bethesda, MD. The Subcommittee will continue its review of the ABB CE System 80+ Design Certification. Topics being proposed for discussion include: Engineered Safety Feature Systems; and incorporation of the requirements resulting from the resolution of USIs and GSIs into the System 80+ design.

Advanced Boiling Water Reactors, October 21–22, 1992, Bethesda, MD. The Subcommittee will continue its review of the Final Safety Evaluation Report (FSER) for the GE ABWR design and the remainder of the SSAR submittals.

Advanced Boiling Water Reactors, November 18, 1992, Bethesda, MD. The Subcommittee will review Supplement 1 to the Final Safety Evaluation Report (FSER) for the ABWR design and any residual issues.

ACRS Full Committee Meetings

388th ACRS Meeting, August 6–8, 1992, Bethesda, MD. Items are tentatively scheduled.

A *Supplement to Generic Letter 83–28, Required Actions Based on Generic Applications of Salem ATWS Events*—Briefing by and discussion with representatives of the NRC staff regarding this proposed supplement to Generic Letter 83–28 and a differing professional opinion regarding this matter.

B. *Inspections, Tests, Analyses, and Acceptance Criteria (ITAAC)*—Review and report on selected ITAACs submitted for design certification of the GE Advanced Boiling Water Reactor. Representatives of the NRC staff and the nuclear industry will participate, as appropriate.

C. *Elimination of Requirements Marginal to Safety*—Review and report on NRC plans to eliminate or modify regulatory requirements that have marginal importance to safety including matters related to items such as the main steam isolation valve leakage control system, combustible gas control systems, containment leak rate testing, and ECCS analytical models. Representatives of the NRC staff and the nuclear industry will participate, as appropriate.

D. *Environmental Qualification of Safety-Grade Digital Computer Protection and Control Systems*—Breifing by and discussion with representatives of the NRC staff on the NRC-sponsored research effort regarding environmental qualification of safety-grade digital computer protection and control systems. Representatives of the nuclear industry will participate, as appropriate.

E. *Primary System Integrity*—Briefing by and discussion with representatives of the NRC staff regarding reactor pressure vessel upper head cracks observed in various European nuclear plants. Portions of this session will be closed as necessary to discuss information provided in confidence by a foreign source.

F. *Pilot Simulator Examination Program*—Briefing by and discussion with representatives of the NRC staff regarding results of a pilot program to evaluation of simulators at nuclear plants used for operator training and/or qualification.

G. *Pilgrim Nuclear Plant, Demonstration of Emergency Plan*—Briefing by and discussion with representatives of the NRC staff regarding the results of the emergency plan demonstration at this plant. Representatives of the applicant and other government agencies will participate, as appropriate.

H. *Meeting with Director, NRC Office of Nuclear Reactor Regulation*—Meeting with Director, NRR, to discuss items of mutual interest, including the status of the GE ABWR design certification review, status of the Regulatory Impact Survey (RIS) implementation and related regulatory matters.

I. *Common-Mode Failures*—Briefing regarding insights gained from analysis of selected common-mode failure events that have occurred at nuclear power plants.

J. *NRC Participation in World Use of the International Nuclear Event Scale*—Briefing by the NRC staff on its proposed use of the International Nuclear Event Scale.

K. *Revision 3 to Regulatory Guide 1.101*—Briefing by and discussion with representatives of the NRC staff regarding Revision 3 to Regulatory Guide 1.101, "Emergency Planning and Preparedness for Nuclear Reactors."

L. *EPRI Requirements for Evolutionary Plants*—Review and report on proposed EPRI requirements for evolutionary light-water reactors and the associated NRC staff's Safety Evaluation Report. Representatives of the NRC staff and the nuclear industry will participate, as appropriate.

M. *Future ACRS Activities*—Discuss topics proposed for consideration by the full Committee.

N. *Resolution of ACRS Comments/ Recommendations*—Discuss NRC Executive Director for Operation's (EDO's) proposed resolution of ACRS comments and recommendations.

*O. *Appointment of ACRS Members*—Discuss qualifications of candidates nominated for appointment to the ACRS and the current status of appointment/ reappointment. Portions will be closed as necessary to discuss information the release of which would represent a clearly unwarranted invasion of personal privacy.

P. *Subcommittee Activities*—Reports on and discussion of assigned subcommittee activities including those related to conduct of ACRS activities and use of computers in nuclear power plants.

Q. *Miscellaneous*—Complete discussion matters which were not completed at previous meetings include topics such as, the NRC Severe Accident

Research Program Plan; Generic Safety Issue 106, Piping and the Use of Highly Combustible Gases in Vital Areas; Issues Pertaining to Evolutionary and Passive Light Water Reactors and their Relationship to Current Regulatory Requirements; and proposed ACRS plan for reviewing the application for certification of the GE ABWR Design.

389th ACRS Meeting, September 10–12, 1992, Bethesda, MD. Agenda to be announced.

390th ACRS Meeting, October 8–10, 1992, Bethesda, MD. Agenda to be announced.

391st ACRS Meeting, November 5–7, 1992, Bethesda, MD. Agenda to be announced.

392nd ACRS Meeting, December 10–12, 1992, Bethesda, MD. Agenda to be announced.

ACNW Full Committee and Working Group Meetings

45th ACNW Meeting, July 29–30, 1992, Bethesda, MD—Agenda to be announced.

A. Meet with representatives of the U.K. Radioactive Waste Management Advisory Committee to discuss items of mutual interest. This session will be closed to protect information provided in confidence by a foreign source.

B. Review and comment on an NRC staff technical position on repository design for thermal loads.

C. Discuss a supplemental request for additional information on a systems analysis approach to reviewing the overall high-level waste program.

D. Discuss with a representative of the Institute of Scrap Recycling Industries regarding radioactive contamination found in metal scrap, recent actions, and recommendations.

E. Continue preparation of a report on the pace of progress in site characterization activities associated with the proposed high-level waste repository.

F. Hear a briefing by the NRC staff on the recent Supreme Court decision regarding the Low-Level Washie Policy Amendments Act.

G. Hear a report on the activities of the NRC's Federal Liaison.

H. Discuss anticipated and proposed Committee activities, future meeting agenda, administrative, and organizational matters, as appropriate. Also, discuss matters and specific issues that were not completed during previous meetings as time and availability of information permit.

46th ACNW Meeting, August 13–14, 1992, Bethesda, MD—Deferred until September 23–25, 1992.

ACNW Working Group on Performance Assessment, September 23, 1992, Bethesda, MD—Deferred until December 16, 1992.

46th ACNW Meeting, September 23–25, 1992, Bethesda, MD—Agenda to be announced.

ACNW Working Group on Inadvertent Human Intrusion Related to the Presence of Natural Resources at a High-Level Waste Repository Site, October 20, 1992, Las Vegas, NV. The Working Group will discuss methodologies for the assessment of the potential for natural resources at the proposed high-level waste repository site at Yucca Mountain. The relationship between such resources and the potential for human intrusion will be emphasized.

47th ACNW Meeting, October 21, 1992, Las Vegas, NV—Agenda to be announced.

ACNW Working Group on the Impact of Long-Range Climate Change in the Area of the Southern Basin and Range, November 18, 1992, Bethesda, MD. The Working Group will discuss the historical evidence and the potential for climate changes in the Southern Basin and Range and the impact of climate change on natural processes affecting the performance of the proposed high-level waste repository at Yucca Mountain.

48th ACNW Meeting, November 19–20, 1992, Bethesda, MD—Agenda to be announced.

ACNW Working Group on Performance Assessment, December 16, 1992, Bethesda, MD. The Working Group will discuss the status of the DOE's Total System Performance Assessment. Also, this Group will discuss the progress of Phase 2 of the HLW Iterative Performance Assessment effort by NRC.

49th ACNW Meeting, December 17–18, 1992, Bethesda, MD—Agenda to be announced.

Dated: July 20, 1992.

John C. Hoyle,

Advisory Committee Management Officer.

[FR Doc. 92–17520 Filed 7–23–92; 8:45 am]

BILLING CODE 7590–01–M

[Docket No. 50–530]

Arizona Public Service Co. (Palo Verde Nuclear Generating Station, Unit No. 3); Exemption

I

Arizona Public Service Company (APS), *et al.* (the licensee) is the holder of Facility Operating License No. NPF–74, which authorizes operation of Palo Verde Nuclear Generating Station (PVNGS), Unit 3. The facility consists of a pressurized water reactor (PWR) at the licensees' site located in Maricopa County, Arizona. This license provides, among other things, that the licensee is subject to all rules, regulations, and Orders of the Commission now or hereafter in effect.

II

Section 50.46 of title 10 of the Code of Federal Regulations (10 CFR 50.46) contains acceptance criteria for emergency core cooling systems (ECCS) for light water nuclear power reactors fueled with uranium oxide pellets within cylindrical zircaloy cladding. Further, 10 CFR 50.46 states that ECCS cooling performance following postulated loss-of-coolant accidents must be calculated in accordance with an acceptable evaluation model. Appendix K to 10 CFR part 50 contains the required and acceptable features for ECCS evaluation models. Finally, 10 CFR 50.44 contains requirements for the control of hydrogen gas that may be generated after a postulated loss-of-coolant accident in light water power reactors fueled with uranium oxide pellets within cylindrical zircaloy cladding.

III

By letter dated December 20, 1991, APS submitted an amendment request for PVNGS Unit 3 to allow the substitution of up to a total of 80 fuel rods clad with advanced zirconium-based alloys, other than the conventional Zircaloy-4, in two fuel assemblies. These assemblies would be used for evaluation of in-reactor performance during fuel cycles 4, 5, and 6.

By letter dated December 20, 1991, APS also submitted an exemption request to 10 CFR 50.46, 10 CFR part 50, appendix K, and 10 CFR 50.44. These regulations refer to the use of zircaloy, but do not clearly specify what is considered zircaloy. Therefore, the use of advanced zirconium-based alloys, rather than conventional Zircaloy-4, may not be within the regulatory basis.

Pursuant to 10 CFR 50.12(a), "The Commission may, upon application by any interested person or upon its own initiative, grant exemptions from the requirements of the regulations of this part, which are—(1) Authorized by law, will not present an undue risk to the public health and safety, and are consistent with the common defense and security. (2) The Commission will not consider granting an exemption unless special circumstances are present. Special circumstances are present whenever—* * * (ii) Application of the

regulation in the particular circumstances would not serve the underlying purpose of the rule or is not necessary to achieve the underlying purpose of the rule * * *".

The Code of Federal Regulations at 10 CFR 50.46 states: "Each boiling and pressurized light-water nuclear power reactor fueled with uranium oxide pellets within cylindrical Zircaloy cladding must be provided with an emergency core cooling system (ECCS) that must be designed such that its calculated cooling performance following postulated loss-of-coolant accidents conforms to the criteria set forth in paragraph (b) of this section. ECCS cooling performance must be calculated in accordance with an acceptable evaluation model and must be calculated for a number of postulated loss-of-coolant accidents of different sizes, locations, and other properties sufficient to provide assurance that the most severe postulated loss-of-coolant accidents are calculated." The Code of Federal Regulations at 10 CFR 50.46 then goes on to give specifications for peak cladding temperature, maximum cladding oxidation, maximum hydrogen generation, coolable geometry, and long term cooling. Since 10 CFR 50.46 specifically refers to fuel with Zircaloy cladding, the use of fuel clad with advanced zirconium-based alloys would, in effect, place the licensee outside the applicability of this section of the Code.

The underlying purpose of the rule is to ensure that facilities have adequate acceptance criteria for ECCS. The fuel rods clad with the advanced zirconium-based alloys will be identical in design and dimension to the fuel rods clad with conventional Zircaloy-4. The advanced cladding materials used in the demonstration fuel assemblies were chosen based on the improved corrosion resistance exhibited in ex-reactor autoclave corrosion tests in both high-temperature water and steam environments. Fuel rods clad with similar types of advanced zirconium-based alloys have been successfully irradiated in high-temperature PWRs in Europe.

The mechanical properties of the clad made from the advances zirconium-based alloys meet all the mechanical requirements of the conventional Zircaloy-4 procurement specifications. Thus, the cladding and structural integrity of the fuel rods and fuel assemblies that have the advanced zirconium-based alloys will be maintained.

Therefore, due to these similarities between advanced zirconium-based alloys and Zircaloy-4, the advanced alloys are expected to result in clad and fuel performance similar to Zircaloy-4, such that 10 CFR 50.46 LOCA acceptance criteria will be satisfied for the advanced zirconium-based cladding. Thus, the underlying purpose of the rule has been met.

Strict interpretation of the regulation would render the criteria of 10 CFR 50.46 inapplicable to the advanced zirconium-based alloys, even through analysis shows that applying the Zircaloy criteria to the advanced zirconium-based alloys yields acceptable results.

A strict application of the regulation in this instance is not necessary to achieve the underlying purpose of the rule. Therefore, special circumstances exist to grant an exemption from 10 CFR 50.46(a)(1)(i) that would allow the licensee to apply the acceptance criteria of 10 CFR 50.46 to a reactor with 80 fuel rods clad with advanced zirconium-based alloys.

The Code of Federal Regulations at 10 CFR 50.44 provides requirements for control of hydrogen gas generated in part by Zircaloy clad fuel after a postulated loss-of-coolant-accident (LOCA). The intent of this rule is to ensure that an adequate means is provided for the control of hydrogen gas that may be generated following a LOCA.

The hydrogen produced in a post-LOCA scenario comes from cladding oxidation from a metal-water reaction. Most of the high temperature oxidation occurs in the β-phase since the diffusion coefficient for oxygen in β-phase of zirconium is significantly greater than that in α-phase zirconium.

The β-phase oxidation resistance of the alloys is expected to be as good as or better than that of Zircaloy-4. It is expected that the alloying element levels adjusted to improve the corrosion resistance of the α-phase of these alloys with respect to the α-phase of Zircaloy-4 will result in an improvement of the corrosion resistance of the β-phase of these alloys as well. It is therefore concluded that the β-phase oxidation rate of the alloys will be comparable to or lower than that of Zircaloy-4 and that the Baker-Just correlation will overpredict the β-phase oxidation of the alloys. A strict interpretation of the rule in this instance would result in the criteria of 10 CFR 50.44 being inapplicable to advanced zirconium-based alloys. Since application of the regulation is not necessary to achieve the underlying purpose of the rule, special circumstances exist to grant an exemption from 10 CFR 50.44 to a reactor containing 80 fuel rods clad with advanced zirconium-based alloys.

Paragraph I.A.5 of appendix K to 10 CFR part 50 states that the rates of energy release, hydrogen generation, and cladding oxidation from the metal-water reaction shall be calculated using the Baker-Just equation. However, since the Baker-Just equation presumes the use of Zircaloy clad fuel, strict application of the rule would not permit use of the equation. The intent of this part of the appendix, however, is to apply an equation that conservatively bounds all post-LOCA scenarios. Due to the similarities in the composition of the advanced zirconium-based alloys and Zircaloy, the application of the Baker-Just equation in the analysis of advanced zirconium-based clad fuel will conservatively bound all post-LOCA scenarios. Since the use of Baker-Just equation presupposes Zircaloy cladding and post-LOCA scenarios are conservatively bounded, the underlying purpose of the rule will be met. Thus, special circumstances exist to grant an exemption from Paragraph I.A.5 of appendix K to 10 CFR part 50 that would allow the licensee to apply the Baker-Just equation to advanced zirconium-based alloys.

IV

Accordingly, the Commission has determined, pursuant to 10 CFR 50.12(a)(1), that an exemption as described in section III above is authorized by law, will not present an undue risk to the public health and safety, and is consistent with the common defense and security. The Commission has determined, pursuant to 10 CFR 50.12(a)(2)(ii) that special circumstances exist, as noted in section III above. Therefore, the Commission hereby grants Arizona Public Service Company, *et al.* an exemption from 10 CFR 50.46, 10 CFR part 50, appendix K, and 10 CFR 50.44.

Pursuant to 10 CFR 51.32, the Commission has determined that the granting of this exemption will not have a significant impact on the quality of the human environment (57 FR 24511).

This exemption is effective upon issuance.

Dated at Rockville, Maryland this 17th day of July, 1992.

For The Nuclear Regulatory Commission.

Bruce A. Boger,

Director, Division of Reactor Projects III/IV/V, Office of Nuclear Reactor Regulation.

[FR Doc. 92-17503 Filed 7-23-92; 8:45 am]

BILLING CODE 7590-01-M

RESOLUTION TRUST CORPORATION

Coastal Barrier Improvement Act; Property Availability, Lakewood Village, TX

AGENCY: Resolution Trust Corporation.

ACTION: Notice.

SUMMARY: Notice is hereby given that the property known as Lakewood Village, located in the City of Lakewood Village, Denton County, Texas, is affected by section 10 of the Coastal Barrier Improvement Act of 1990, as specified below.

DATES: Written notices of serious interest to purchase or effect other transfer of the property may be mailed or faxed to the RTC until October 22, 1992.

ADDRESSES: Copies of detailed descriptions of the property, including maps, can be obtained from or are available for inspection by contacting the following person: Mr. Steven W. Reid, Resolution Trust Corporation, Dallas Field Office, 3500 Maple Avenue, Reverchon Plaza, suite 210, Dallas, TX 75219–3935, (214) 443–4738, Fax (214) 443–4825.

SUPPLEMENTARY INFORMATION: The Lakewood Village property is located at the southwest corner of Highdridge Drive and Green Meadows Drive, in the City of Lakewood Village, Denton County, Texas. The east side of the property fronts Old Highway 24. The property has recreational value and consists of approximately 226 acres of undeveloped land. The site is contiguous with Lake Lewisville which is managed by the U.S. Army Corps of Engineers for recreational purposes. The property is covered property within the meaning of section 10 of the Coastal Barrier Improvement Act of 1990, Public Law 101–591 (12 U.S.C. 1441a–3).

Characteristics of the property include: The property consists of two tracts caused by the intervention of a cove from Lake Lewisville with approximately 3.1 miles of lake frontage. The topography is gently rolling. Some areas of the site are heavily treed and a portion of the site has been cleared but is overgrown.

Property size: Approximately 226 acres.

Written notice of serious interest in the purchase or other transfer of the property must be received on or before October 22, 1992, by the Resolution Trust Corporation at the address stated above.

Those entities eligible to submit written notices of serious interest are:

1. Agencies or entities of the Federal government;

2. Agencies or entities of State or local government; and

3. "Qualified organizations" pursuant to section 170(h)(3) of the Internal Revenue Code of 1986 (26 U.S.C. 170(h)(3)).

Written notices of serious interest to purchase or effect other transfer of the property must be submitted by October 22, 1992 to Mr. Steven W. Reid at the above **ADDRESSES** and in the following form.

Notice of Serious Interest
RE: Lakewood Village
Federal Register Publication Date:

1. Entity name.
2. Declaration of eligibility to submit Notice under criteria set forth in Coastal Barrier Improvement Act of 1990, P.L. 101–591, Section 10(b)(2), (12 U.S.C. 1441a-3(b)(2)).
3. Brief description of proposed terms of purchase or other offer (e.g., price and method of financing).
4. Declaration by entity that it intends to use the property primarily for wildlife refuge, sanctuary, open space, recreational, historical, cultural, or natural resource conservation purposes.
5. Authorized Representative (Name/Address/Telephone/Fax).

Dated: July 20, 1992.

Resolution Trust Corporation.

William J. Tricarico,

Assistant Secretary.

[FR Doc. 92–17507 Filed 7–23–92; 8:45 am]

BILLING CODE 6714-01-M

Coastal Barrier Improvement Act; Property Availability; Horse Hollow Cave, KY

AGENCY: Resolution Trust Corporation.

ACTION: Notice.

SUMMARY: Notice is hereby given that the property known as Horse Hollow Cave, located in Parmleysville, Wayne County, Kentucky, is affected by section 10 of the Coastal Barrier Improvement Act of 1990, as specified below.

DATES: Written notices of serious interest to purchase or effect other transfer of the property may be mailed or faxed to the RTC until October 22, 1992.

ADDRESSES: Copies of detailed descriptions of the property, including maps, can be obtained from or are available for inspection by contacting the following person: Mr. Steven W. Reid, Resolution Trust Corporation, Dallas Field Office, 3500 Maple Avenue, Reverchon Plaza, suite 210, Dallas, TX 75219–3935, (214) 443–4738, FAX (214) 443–4825.

SUPPLEMENTARY INFORMATION: The Horse Hollow Cave property is located northwest of Mt. Pisgah-Parmleysville Road, Wayne County, Kentucky. The property consists of approximately 1,562.42 acres and contains several streams draining into the Little South Fork Cumberland River through Horse Hollow Creek. The federally endangered Cumberland bean pearly mussel is known to occur in the nearly Little South Fork Cumberland River. The property is adjacent to the Daniel Boone National Forest which is on the other side of Mt. Pisgah-Parmleysville Road. The property is covered property within the meaning of section 10 of the Coastal Barrier Improvement Act of 1990, Pub. L. 101–591 (12 U.S.C. 1441a–3).

Characteristics of the property include: The property is irregular in shape with mountainous terrain and heavily forested. Horse Hollow Cave lies within the boundaries of the property and the cave is known to harbor Rafinesque's Big-eared bat, a threatened species in the State of Kentucky. The property contains several streams draining into the Little South Fork Cumberland River where the federally endangered Cumberland bean pearly mussel can be found along with several other aquatic species considered threatened in Kentucky by the Kentucky State Nature Preserves Commission.

Property size: Approximately 1,562.42 acres.

Written notice of serious interest in the purchase or other transfer of the property must be received on or before October 22, 1992, by the Resolution Trust Corporation at the address stated above.

Those entities eligible to submit written notices of serious interest are:

1. Agencies or entities of the Federal government;

2. Agencies or entities of State or local government; and

3. "Qualified organizations" pursuant to section 170(h)(3) of the Internal Revenue Code of 1986 (26 U.S.C. 170(h)(3)).

Written notices of serious interest to purchase or effect other transfer of the property must be submitted by October 22, 1992 to Mr. Steven W. Reid at the above ADDRESSES and in the following form:

Notice of Serious Interest
RE: Horse Hollow Cave
Federal Register Publication Date:

1. Entity name.
2. Declaration of eligibility to submit Notice under criteria set forth in Coastal Barrier Improvement Act of 1990, P.L. 101–591, Section 10(b)(2), (12 U.S.C. 1441a-3(b)(2)).
3. Brief description of proposed terms of purchase or other offer (e.g., price and method of financing).

4. Declaration by entity that it intends to use the property primarily for wildlife refuge, sanctuary, open space, recreational, historical, cultural, or natural resource conservation purposes.
5. Authorized Representative (Name/Address/Telephone/Fax).

Dated: July 20, 1992.

Resolution Trust Corporation.

William J. Tricarico,

Assistant Secretary.

[FR Doc. 92-17508 Filed 7-23-92; 8:45 am]

BILLING CODE 6714-01-M

SECURITIES AND EXCHANGE COMMISSION

[Release No. IC-18854; International Series Release No. 424; (812-7797)]

Barclays Bank PLC; Notice of Application

July 17, 1992.

AGENCY: Securities and Exchange Commission ("SEC" or "Commission").

ACTION: Notice of Application for Exemption under the Investment Company Act of 1940 (the "1940 Act").

APPLICANT: Barclays Bank PLC ("Barclays").

RELEVANT 1940 ACT SECTION: Exemption requested under Section 6(c) from the provisions of section 17(f).

SUMMARY OF APPLICATION: Barclays seeks an order to permit the maintenance of foreign securities and other assets of registered investment companies other than investment companies registered under section 7(d) (an "Investment Company") with Merck Finck & Co. ("Merck Finck"), a general partnership, of which Barclays is a general partner.

FILING DATE: The application was filed on September 27, 1991 and amended on March 10, 1992, May 20, 1992, and June 15, 1992.

HEARING OR NOTIFICATION OF HEARING: An order granting the application will be issued unless the SEC orders a hearing. Interested persons may request a hearing by writing to the SEC's Secretary and serving applicant with a copy of the request, personally or by mail. Hearing requests should be received by the SEC by 5:30 p.m. on August 11, 1992, and should be accompanied by proof of service on applicant, in the form of an affidavit or, for lawyers, a certificate of service. Hearing requests should state the nature of the writer's interest, the reason for the request, and the issues contested. Persons may request notification of a hearing by writing to the SEC's Secretary.

ADDRESSES: Secretary, SEC, 450 5th Street, NW., Washington, DC 20549. Applicant, c/o James E. Odell, Esq., Simpson Thacher & Bartlett, 425 Lexington Avenue, New York, New York 10017.

FOR FURTHER INFORMATION CONTACT: Marilyn Mann, Special Counsel, (202) 504-2259, or Barry D. Miller, Senior Special Counsel, (202) 272-3018 (Division of Investment Management, Office of Investment Company Regulation).

SUPPLEMENTARY INFORMATION: The following is a summary of the application. The complete application may be obtained for a fee at the SEC's Public Reference Branch.

Applicant's Representations and Legal Analysis

1. Barclays seeks an order to exempt it, any Investment Company, and Merck Finck from section 17(f) of the 1940 Act so as to permit Barclays, as the custodian or subcustodian of an Investment Company's foreign securities (as defined in rule 17f-5 under the 1940 Act), cash and cash equivalents in amounts reasonably necessary to effect such company's foreign securities transactions (collectively, "Assets"), to maintain an Investment Company's Assets in the custody of Merck Finck as a foreign subcustodian.

2. Rule 17f-5 under the 1940 Act provides that any registered management investment company may place and maintain in the care of an eligible foreign custodian the company's foreign securities, cash, and cash equivalents in amounts reasonably necessary to affect the company's foreign securities transactions. Rule 17f-5(c)(2)(i) defines the term "eligible foreign custodian" to include a banking institution or trust company incorporated or organized under the laws of a country other than the United States that is regulated as such by that country's government or an agency thereof and that has shareholders' equity in excess of U.S. $200,000,000.

3. Merck Finck is a general partnership and is a bank organized and regulated under the laws of Germany. Barclays is a general partner of Merck Finck and has contributed all of Merck Finck's capital. As of December 31, 1990, Merck Finck had assets in excess of U.S. $1.85 billion and partners' equity of approximately U.S. $111 million. Merck Finck satisfies the requirements of rule 17f-5(c)(2)(i) insofar as it is a banking institution organized under the laws of a country other than the United States and is regulated as such by such country's government or an agency thereof. Merck Finck, however, does not satisfy the rule's $200 million shareholders' equity requirement because its partners' equity is only equal to approximately U.S. $111 million. In addition, applicant is concerned that Merck Finck, as a partnership, has no "shareholders" and thus may not be able to meet the shareholders' equity requirement of the rule.

4. Barclays is a company organized and existing under the laws of the United Kingdom. In the United Kingdom, Barclays is authorized and regulated by the Bank of England, and in the United States, Barclays is regulated as a bank holding company and is subject to the United States International Banking Act of 1978. Barclays' New York branch is licensed by the Superintendent of Banks of the State of New York and is qualified to do business in accordance with the provisions of Article V of the Banking Law of the State of New York. At December 31, 1990, Barclays had shareholders' equity of approximately six billion pounds sterling.

5. Merck Finck is experienced, capable, and well-qualified to provide custody services to investment companies, and under the foreign custody arrangements proposed, the protection of investors would not be diminished.

Applicant's Conditions

Barclays agrees that the order of the SEC granting the requested relief shall be subject to the following conditions:

1. The foreign custody arrangements proposed with respect to Merck Finck will satisfy the requirements of rule 17f-5 in all respects other than with regard to the minimum shareholders' equity requirement for an eligible foreign custodian.

2. Barclays currently satisfies and will continue to satisfy the minimum shareholders' equity requirement set forth in rule 17f-5(c)(2)(i).

3. Barclays will deposit securities in Germany with Merck Finck only in accord with a three-party contractual agreement, which will remain in effect at all times during which Merck Finck fails to meet the requirement of rule 17f-5 relating to minimum shareholders' equity, among (a) the Investment Company or a custodian of the securities of the Investment Company for which Barclays acts as subcustodian, (b) Barclays and (c) Merck Finck. Pursuant to the terms of this agreement, Barclays will provide specified custodial or sub-custodial services for the Investment Company or the custodian, as the case may be, and will delegate to Merck Finck such of its duties and

obligations as will be necessary to permit Merck Finck to hold the securities in custody in Germany. The agreement will further provide that Barclays will be liable for any loss, damage, cost, expense, liability, or claim arising out of or in connection with the performance by Merck Finck of its responsibilities under the agreement to the same extent as if Barclays had been required to provide custody services under such agreement.

For the Commission, by the Division of Investment Management, under delegated authority.

Margaret H. McFarland,

Deputy Secretary.

[FR Doc. 92-17488 Filed 7-23-92; 8:45 am]

BILLING CODE 8010-01-M

[Investment Company Act Rel. No. 18850; 811-4544]

Merrill Lynch Retirement/Income Fund, Inc.; Notice of Application

July 15, 1992.

AGENCY: Securities and Exchange Commission ("SEC").

ACTION: Notice of Application for Deregistration under the Investment Company Act of 1940 ("Act").

APPLICANT: Merrill Lynch Retirement/Income Fund, Inc.

RELEVANT ACT SECTION: Section 8(f).

SUMMARY OF APPLICATION: Applicant seek an order declaring that it has ceased to be an investment company.

FILING DATE: The application was filed on April 29, 1992 and amended on July 7, 1992.

HEARING OR NOTIFICATION OF HEARING: An order granting the application will be issued unless the SEC orders a hearing. Interested persons may request a hearing by writing to the SEC's Secretary and serving applicant with a copy of the request, personally or by mail. Hearing requests should be received by the SEC by 5:30 p.m. on August 10, 1992, and should be accompanied by proof of service on the applicant, in the form of an affidavit or, for lawyers, a certificate of service. Hearing requests should state the nature of the writer's interest, the reason for the request, and the issues contested. Persons who wish to be notified of a hearing may request such notification by writing to the SEC's Secretary.

ADDRESSES: Secretary, SEC, 450 Fifth Street, NW., Washington, DC 20549. Applicant, 800 Scudders Mill Road, Plainsboro, NJ 08536.

FOR FURTHER INFORMATION CONTACT: James E. Anderson, Law Clerk, at (202) 272-7027, or C. David Messman, Branch Chief, at (202) 272-3018 (Division of Investment Management, Office of Investment Company Regulation).

SUPPLEMENTARY INFORMATION: The following is a summary of the application. The complete application may be obtained for a fee from the SEC's Public Reference Branch.

Applicant's Representations

1. Applicant is a diversified open-end management investment company organized as a Maryland corporation. Applicant registered under the Act on January 2, 1986, and filed a registration statement under the Securities Act of 1933 on January 3, 1986. The registration statement became effective and applicant commenced its initial public offering on February 18, 1986.

2. On July 12, 1991, applicant's board of directors approved a reorganization plan (the "Plan") between applicant and Merrill Lynch Federal Securities Trust ("FST") whereby FST would acquire substantially all of applicant's assets and assume all of applicant's liabilities in exchange for shares of FST. Proxy materials soliciting shareholder approval of the Plan were filed with the SEC on August 6, 1991, and mailed on September 17, 1991 to all shareholders of record as of September 6, 1991. The Plan was approved, in accordance with Maryland law, by applicant's shareholders at a meeting held on December 20, 1991.

3. As described in the proxy statement and prospectus incorporated into the application by reference, prior to the reorganization, applicant's shares were sold subject to a contingent deferred sales charge, and shares of FST were sold subject to a front-end sales charge. As part of the reorganization, FST implemented a dual distribution scheme and created a second class of shares ("Class B" shares) with a sales charge and fee structure identical to that of applicant.[1] Existing FST shares were designated Class A.

4. On December 20, 1991, applicant transferred assets having an aggregate value of $1,798,396,597.32 to FST and received in exchange 181,334,377.622 Class B shares of FST. The exchange was made at net asset value. The shares of FST received in exchange for applicant's assets were then distributed to applicant's shareholders *pro rata* in accordance with their respective interests in applicant.

5. Prior to the reorganization date, applicant incurred $252,779 in reorganization expenses for preparation of materials for applicant's board of directors, preparation of proxy materials, and legal and audit fees. Applicant paid $55,559, and FST paid $68,837, of expenses arising from the reorganization transaction. Applicant also retained $15,000 for expenses to be incurred in connection with its deregistration and dissolution.

6. As of the date of the amended application, applicant had no shareholders, assets, or liabilities. Applicant is not a party to any litigation or administrative proceeding. Applicant is not presently engaged in, nor does it propose to engage in, any business activities other than those necessary for the winding up of its affairs.

For the SEC, by the Division of Investment Management, under delegated authority.

Margaret H. McFarland,

Deputy Secretary.

[FR Doc. 92-17486 Filed 7-23-92; 8:45 am]

BILLING CODE 8010-01-M

[1] The dual distribution system was implemented pursuant to an exemptive order of the Commission. Investment Company Act Release Nos. 16503 (July 28, 1988) (notice), and 16534 (Aug. 23, 1988) (order).

[Release No. 35-25585]

Filings Under the Public Utility Holding Company Act of 1935 ("Act")

July 17, 1992.

Notice is hereby given that the following filing(s) has/have been made with the Commission pursuant to provisions of the Act and rules promulgated thereunder. All interested persons are referred to the application(s) and/or declaration(s) for complete statements of the proposed transaction(s) summarized below. The application(s) and/or declaration(s) and any amendments thereto is/are available for public inspection through the Commission's Office of Public Reference.

Interested persons wishing to comment or request a hearing on the application(s) and/or declaration(s) should submit their views in writing by August 10, 1992 to the Secretary, Securities and Exchange Commission, Washington, DC 20549, and serve a copy on the relevant applicant(s) and/or declarant(s) at the address(es) specified below. Proof of service (by affidavit or, in case of an attorney at law, by certificate) should be filed with the request. Any request for hearing shall identify specifically the issues of fact or law that are disputed. A person who so requests will be notified of any hearing, if ordered, and will receive a copy of any notice or order issued in the matter. After said date, the application(s) and/

or declaration(s), as filed or as amended, may be granted and/or permitted to become effective.

New England Electric System, et al. (70-7950)

New England Electric System ("NEES") a registered holding company, and its service company subsidiary, New England Power Service Company ("NEPSCO"), both located at 25 Research Drive, Westborough, Massachusetts 01582, have filed an application-declaration, as amended, under sections 6(a), 7, 9(a), 10, 12(b) and 13(b) of the Act and rules 45, 87, 90 and 91 thereunder.

NEES proposes to provide financing for a new nonutility subsidiary company, New England Electric Resources, Inc. ("NEERI"). NEES proposes to provide initial financing by: (i) the purchase of 1,000 shares of NEERI's common stock, par value $1 per share, for a total purchase price of $1,000; (ii) making capital contributions up to an additional $999,000 ("Capital Contributions"); and/or (iii) making loans to NEERI in the amounts not to exceed $999,000 ("Loans"), which Loans to be evidenced by subordinated notes payable in twenty years or less from the date of issue without interest (Capital Contributions and Loans, Collectively, "Other Financing"). The aggregate amount of all investments, including the purchase of common stock, by NEES in NEERI shall not exceed $1 million.

NEERI proposes to engage in the business of providing consulting services to nonaffiliates for profit. The consulting services will include:

(1) Providing studies and reports on electrical issues;

(2) Meeting with technical staff on electrical issues and assessing strengths, weaknesses, and potential solutions;

(3) Conducting seminars;

(4) Developing and proposing programs for implementation by the customer;

(5) Making regulatory assessments; and

(6) Other similar consulting services.

Initially NEERI will be staffed with a small group of NEES system employees and recently retired executives. Retirees would be hired as independent contractors by NEERI as needed. As significant business is developed, additional employees will be staffed, the first preference being other current employees of NEPSCO. While these employees are assigned to NEERI on a limited term, they would continue to be employees of that system company and their pay (including benefits) would be reimbursed by NEERI. The applicants state that the consulting business is functionally related to the electric utility business because:

(1) Employees who temporarily do not have a full workload can be efficiently and beneficially utilized;

(2) The consulting business is a natural outgrowth of current activities; and

(3) Utility personnel would broaden and sharpen their skills for the benefit of the electric companies.

The application-declaration states that NEES, acting through NEPSCO, has pursued two international consulting opportunities for the benefit of NEERI, and that, promptly after receipt of the authorization requested herein, NEPSCO will make a general assignment of such agreements to NEERI. NEPSCO states that it will not enter into any additional contracts or letters of intent on behalf of itself or NEERI with respect to consulting services without obtaining the Commission approval. In addition, NEPSCO will provide accounting, office space and financial services to NEERI at its cost.

The applicants therefore request authority through December 31, 1997:

(1) For NEERI to issue and sell, and for NEES to acquire, 1,000 shares of common stock of NEERI;

(2) For NEES to provide Other Financing for NEERI;

(3) For NEERI to engage in the business of providing consulting services on electric utility matters to non-affiliates; and

(4) For NEPSCO to provide certain services to NEERI at cost.

Ohio Power Company (70-7965)

Ohio Power Company ("OPC"), 301 Cleveland Avenue, SW., Canton, Ohio 44702, a public-utility subsidiary company of American Electric Power Company, Inc., a registered holding company, has filed an application under section 9(c)(3) of the Act.

OPC proposes to make an interest free loan ("Loan") to The Seneca Industrial and Economic Development Corp., a non-profit corporation organized under the laws of the State of Ohio ("SIEDC") for the purpose of promoting industrial and commercial retention and growth within Seneca County, Ohio.

SIEDC plans to construct a 30,000 square foot speculative industrial building at a cost estimated to be less than $200,000. The site of the construction is within OPC's service territory. Construction is estimated to take two to three months and will be financed through a construction loan of up to $200,000 ("Construction Loan"). Upon completion of the construction, the Construction Loan will be converted to a permanent loan, which will be a three year term loan amortized over fifteen years with a balloon payment at the end of the third year.

Interest on the permanent loan will be at a variable rate based on the base rate as issued by National City Corporation of Cleveland, Ohio (currently 6.5%) for the first eighteen month period of the loan. During the remaining eighteen months of the loan, the interest rate will be a variable rate based on National City Bank's base rate plus two percent (currently 8.5%).

The Loan amount will equal the amount of the interest payments on the permanent term loan for up to three years or until the building is leased or sold, whichever is sooner. The estimated cost of the Loan by OPC is less than $50,000. OPC will have no obligation to pay any part of the Construction Loan or any principal on the permanent term loan. In return for the Interest Loan, OPC will receive from SIEDC an unsecured promissory note.

For the Commission, by the Division of Investment Management, pursuant to delegated authority.

Margaret H. McFarland,

Deputy Secretary.

FR Doc. 92-17487 Filed 7-23-92; 8:45 am]

BILLING CODE 8010-01-M

DEPARTMENT OF TRANSPORTATION

Aviation Proceedings; Agreements Filed During the Week Ended July 17, 1992

The following Agreements were filed with the Department of Transportation under the provisions of 49 U.S.C. 412 and 414. Answers may be filed within 21 days of date of filing.

Docket Number: 48249

Date filed: July 15 1992.

Parties: Members of the International Air Transport Association.

Subject: TC2 Reso/P 1257 Dated July 7, 1992.

Expedited Within Europe Resos—R-1 To R-4

TC2 Reso/P 1258 dated July 7, 1992, Expedited within Europe Resos—R-5 To R-14

TC2 Reso/P 1259 dated July 7, 1992, Expedited within Europe Resos—R-15 To R-16

TC2 Reso/P 1260 dated July 7, 1992, Expedited Within Europe Resos—R-17 To R-20

TC2 Reso/P 1261 dated July 7, 1992, Expedited Within Europe Resos—R-21 To R-25

Proposed Effective Date: August 15/September 1, 1992.

Docket Number: 48250

Date filed: July 15, 1992

Parties: Members of the International Air Transport Association.

Subject: TC12 Reso/P 1428 dated June 12, 1992, North Atlantic-Africa Resolutions—R-1 To R-19

Proposed Effective Date: October 1, 1992.

Phyllis T. Kaylor,

Chief, Documentary Services Division.

[FR Doc. 92-17504 Filed 7-23-92; 8:45 am]

BILLING CODE 4910-62-M

Applications for Certificates of Public Convenience and Necessity and Foreign Air Carrier Permits Filed Under Subpart Q During the Week Ended July 17, 1992

The following Applications for Certificates of Public Convenience and Necessity and Foreign Air Carrier Permits were filed under subpart Q of the Department of Transportation's Procedural Regulations (see 14 CFR 302.1701 *et seq.*). The due date for Answers, Conforming Applications, or Motions to Modify Scope are set forth below for each application. Following the Answer period DOT may process the application by expedited procedures. Such procedures may consist of the adoption of a show-cause order, a tentative order, or in appropriate cases a final order without further proceedings.

Docket Number: 48245.

Date filed: July 13, 1992.

Due Date for Answers, Conforming Applications, or Motion to Modify Scope: August 10, 1992.

Description: Application of Baltia Air Lines, Inc. (Baltia), pursuant to section 401 of the Act and subpart Q of the regulations requests an extension of its Backup Route Authority as granted in Certificate 614, or, in the alternative, applies for a new or amended certificate of public convenience and necessity (Beyond Riga to Moscow). Baltia applies for an extension to Certificate 614 to March 17, 1993, one year from the date upon which TWA reportedly initiated service to Moscow.

Docket Number: 48247.

Date filed: July 14, 1992.

Due Date for Answers, Conforming Applications, or Motion to Modify Scope: August 11, 1992.

Description: Application of Tower Air, Inc., pursuant to section 401 of the Act, and subpart Q of the regulations, applies for a Certificate of Public Convenience and Necessity for authority to operate scheduled property and mail air service between points in the United States, on the one hand, and Taipei, Taiwan, R.O.C., on the other.

Docket Number: 48252.

Date filed: July 16, 1992.

Due Date for Answers, Conforming Applications, or Motion to Modify Scope: August 13, 1992.

Description: Application of Estrellas Del Air, S.A. De C.V., pursuant to section 402 of the Act and subpart Q of the regulations, request a foreign air carrier permit for authority to engage in charter foreign air transportation of property and mail between a point or points in Mexico and a point or points in the U.S.

Docket Number: 48254.

Date filed: July 17, 1992.

Due Date for Answers, Conforming Applications, or Motion to Modify Scope: August 14, 1992.

Description: Application of American Airlines, Inc., pursuant to section 401 of the Act and subpart Q of the regulations applies for renewal of segments 2, 3, and 4 of its certificate for Route 560, as issued by Order 92-5-20, May 8, 1992, authorizing scheduled foreign air transportation of persons, property, and mail between Dallas/Ft. Worth, on the one hand, and Cancun, Puerto Vallarta, and Guadalajara, Mexico, on the other.

Docket Number: 45723.

Date filed: July 13, 1992.

Due Date for Answers, Conforming Applications, or Motion to Modify Scope: August 10, 1992.

Description: Application of Transportes Aereos Ejecutivos, S.A. de C.V. pursuant to section 402 of the Act and subpart Q of the Regulations, applies for amendment of its foreign air carrier permit issued to it in Order 89-8-29, to the extent necessary to permit TAESA to engage in the scheduled air transportation of persons, property and mail between Ciudad Juarez, Mexico, on the one hand, and Chicago, Illinois, on the other hand.

Phyllis T. Kaylor,

Chief, Documentary Services Division.

[FR Doc. 92-17505 Filed 7-23-92; 8:45 am]

BILLING CODE 4910-62-M

Coast Guard

[CCGD8-92-18]

Public Hearing Concerning Lower Mississippi River Waterways Analysis and Management Study (WAMS)

AGENCY: Coast Guard, DOT.

ACTION: Notice of public hearing.

SUMMARY: Notice is hereby given of a public hearing to be held by the Commander, Eighth Coast Guard District, at New Orleans, Louisiana. The purpose of the hearing is to provide an opportunity to all interested persons to present data, views and comments orally or in writing concerning the Waterway Analysis and Management Study (WAMS) for the Lower Mississippi River.

DATE: The hearing will be held on August 11, 1992, commencing at 1 p.m., until all speakers in attendance have had the opportunity to comment.

ADDRESS: The hearing will be held at the U.S. Coast Guard Marine Safety Office, room 911, 1440 Canal St., New Orleans, LA.

FOR FURTHER INFORMATION CONTACT: LTJG Rowlett, Contact Officer, Commander, Eighth Coast Guard District (oan), Hale Boggs Federal Building, 501 Magazine Street, New Orleans, LA 70130-3396, Tel. (504) 589-6235.

SUPPLEMENTARY INFORMATION: The Coast Guard's Waterways Analysis and Management System (WAMS) is a framework for individually examining our navigable waterways. The goal of the program is to insure that the waterways are marked by an efficient aids to navigation system that promotes safe navigation and the efficient flow of commerce for all users.

A notice announcing the study and requesting comments was published in the Second, Fifth, Seventh and Eighth Coast Guard District Notice to Mariners, beginning last April. Comments were also solicited through articles in Work Boat Magazine and the Waterways Journal. Interested parties were originally given until May 22, 1992 to comment. The period was later extended to June 19, 1992 to insure that all concerned were permitted ample time to respond.

Any person who wishes may appear and be heard at this public hearing. Persons planning to appear and be heard are requested to notify the Commander, Eighth Coast Guard District (oan), Hale Boggs Federal Building, 501 Magazine Street, New Orleans, LA 70130-3396, Tel. (504) 589-6235, any time prior to the hearing indicating the amount of time required. Depending on the number of scheduled statements, it may be necessary to limit the amount of time allocated to each person. Any limitation of time will be announced at the beginning of the hearing. Written statements and exhibits may be submitted in lieu of or in addition to oral statements and will be made a part of the hearing record. Such written statements and exhibits

may be delivered at the hearing or mailed in advance to the Commander, Eighth Coast Guard District, at the above address.

Dated: July 6, 1992.

J. C. Card,

Rear Admiral, USCG, Commander, Eighth Coast Guard District.

[FR Doc. 92-17509 Filed 7-23-92; 8:45 am]

BILLING CODE 4910-14-M

Federal Highway Administration

Environmental Impact Statement, Wood, Portage and Waupaca Counties, WI

AGENCY: Federal Highway Administration (FHWA), DOT.

ACTION: Notice of intent.

SUMMARY: The FHWA is issuing this notice to advise the public that an environmental impact statement will be prepared for a proposed highway project in Wood, Portage and Waupaca Counties, Wisconsin.

FOR FURTHER INFORMATION CONTACT: Ms. Jaclyn Lawton, District Environmental Coordinator, Federal Highway Administration, 4502 Vernon Boulevard, Madison, Wisconsin 53705, 608-264-5967.

SUPPLEMENTARY INFORMATION: The FHWA, in cooperation with the Wisconsin Department of Transportation will prepare an environmental impact statement (EIS) on a proposal to improve USH 10 in Wood, Portage and Waupaca Counties, Wisconsin. The proposed action would involve the reconstruction of existing USH 10. The project begins at STH 13 in Wood County and continues southeasterly through Portage County and ends at the intersection of STH 54/49 in Waupaca County. The project length is approximately 60 miles.

Improvements to the corridor are considered necessary to provide for the existing and projected traffic demand. Alternatives under consideration include (1) take no action; (2) widening the existing two-lane highway to four lanes; (3) construction of a two-lane highway on new location with provisions for future expansion to 4-lanes; (4) constructing a four-lane, limited access highway on new location including a new crossing of the Wisconsin River; and (5) combinations of alternatives 2, 3, and 4. Design variations of the grade and alignment will be incorporated and studied with the various build alternatives.

Letters describing the proposed action and soliciting comments will be sent to appropriate Federal, State, and local agencies, and to private organizations and citizens who have previously expressed or are known to have interest in this proposal. A series of public meetings will be held between July and October, 1992. In addition, a public hearing will be held. Public notice will be given of the time and place of the meetings and hearing. The draft EIS will be available for public and agency review and comment prior to the public hearing. No formal scoping meeting is planned at this time.

To ensure that the full range of issues related to this proposed action are addressed and all significant issues identified, comments, and suggestions are invited from all interested parties. Comments or questions concerning this proposed action and the EIS should be directed to the FHWA at the address provided above.

(Catalog of Federal Domestic Assistance Program Number 20.205, Highway Planning and Construction. The regulations implementing Executive Order 12372 regarding intergovernmental consultation of Federal programs and activities apply to this program.)

Issued on: July 14, 1992.

James R. Zavoral,

Acting District Engineer, Madison, Wisconsin.

[FR Doc. 92-17457 Filed 7-23-92; 8:45 am]

BILLING CODE 4910-22-M

DEPARTMENT OF THE TREASURY

Public Information Collection Requirements Submitted to OMB for Review

Dated: July 17, 1992.

The Department of the Treasury has made revisions and resubmitted the following public information collection requirement(s) to OMB for review and clearance under the Paperwork Reduction Act of 1980, Public Law 96-511. Copies of the submission(s) may be obtained by calling the Treasury Bureau Clearance Officer listed. Comments regarding this information collection should be addressed to the OMB reviewer listed and to the Treasury Department Clearance Officer, Department of the Treasury, room 3171 Treasury Annex, 1500 Pennsylvania Avenue, NW., Washington, DC 20220.

Internal Revenue Service

OMB Number: 1545-0236
Form Number: IRS Form 11-C
Type of Review: Resubmission
Title: Stamp Tax and Registration Return for Wagering
Description: Form 11-C is used to register persons accepting wagers (IRC section 4412) IRS uses this form to register the respondent, collect the annual stamp tax (IRC section 4412) and to verify that the tax on wagers is reported on Form 730
Respondents: Individuals or households, Businesses or other for-profit
Estimated Number of Respondents/Recordkeepers: 11,500

Estimated Burden Hours Per Respondent/Recordkeeper

Recordkeeping	7 hrs., 10 min.
Learning about the law or the form.	28 min.
Preparing the form	1 hr., 32 min.
Copying, assembling, and sending the form to the IRS.	16 min.

Frequency of Response: Annually
Estimated Total Reporting/Recordkeeping Burden: 108,560 hours
Clearance Officer: Garrick Shear (202) 535-4297, Internal Revenue Service, room 5571, 1111 Constitution Avenue, NW., Washington, DC 20224.
OMB Reviewer: Milo Sunderhauf (202) 395-6880, Office of Management and Budget, room 3001, New Executive Office Building, Washington, DC 20503.

Lois K. Holland,

Departmental Reports Management Officer.

[FR Doc. 92-17471 Filed 7-23-92; 8:45 am]

BILLING CODE 4830-01-M

Public Information Collection Requirements Submitted to OMB for Review

Dated: July 17, 1992.

The Department of the Treasury has submitted the following public information collection requirement(s) to OMB for review and clearance under the Paperwork Reduction Act of 1980, Public Law 96-511. Copies of the submission(s) may be obtained by calling the Treasury Bureau Clearance Officer listed. Comments regarding this information collection should be addressed to the OMB reviewer listed and to the Treasury Department Clearance Officer, Department of the Treasury, Room 3171 Treasury Annex, 1500 Pennsylvania Avenue, NW., Washington, DC 20220.

Internal Revenue Service

OMB Number: 1545-0096
Form Number: IRS Forms 1042 and 1042S

Type of Review: Revision
Title: Annual Withholding Tax Return for U.S. Source Income of Foreign Persons, Foreign Person's U.S. Source Income Subject to Withholding
Description: Used by withholding agents to report tax withheld at source on payment of certain income paid to nonresident alien individuals, foreign partnerships, or foreign corporations. The Service uses this information to verify that the correct amount of tax has been withheld and paid to the U.S.
Respondents: Individuals or households, Businesses or other for-profit
Estimated Number of Respondents/ Recordkeepers: 22,000

Estimated Burden Hours Per Respondent/Recordkeeper

Forms	1042	1042S
Recordkeeping.	8 hours, 22 minutes.	4 hours, 47 minutes.
Learning about the law or the form.	4 hours, 31 minutes.	1 hour, 40 minutes.
Preparing the form.	6 hours, 40 minutes.	2 hours, 44 minutes.
Copying, assembling, and sending the form to the IRS.	32 minutes.....	16 minutes.

Frequency of Response: Annually
Estimated Total Reporting/ Recordkeeping Burden: 15,514,680 hours

Clearance Officer: Garrick Shear (202) 535-4297, Internal Revenue Service, Room 5571, 1111 Constitution Avenue, NW., Washington, DC 20224.

OMB Reviewer: Milo Sunderhauf (202) 395-6880, Office of Management and Budget, Room 3001, New Executive Office Building, Washington, DC 20503.

Lois K. Holland,
Departmental Reports Management Officer.

[FR Doc. 92-17472 Filed 7-23-92; 8:45 am]

BILLING CODE 4830-01-M

Public Information Collection Requirements Submitted to OMB for Review

Dated: July 17, 1992.

The Department of Treasury has submitted the following public information collection requirement(s) to OMB for review and clearance under the Paperwork Reduction Act of 1980, Public Law 96-511. Copies of the submission(s) may be obtained by calling the Treasury Bureau Clearance Officer listed. Comments regarding this information collection should be addressed to the OMB reviewer listed and to the Treasury Department Clearance Officer, Department of the Treasury, Room 3171 Treasury Annex, 1500 Pennsylvania Avenue, NW., Washington, DC 20220.

Bureau of Alcohol, Tobacco and Firearms

OMB Number: 1512-0046.
Form Number: ATF F 27-G (5520.3).
Type of Review: Extension.
Title: Applications—Volatile Fruit-Flavor Concentrate Plants.
Description: Persons who wish to establish premises to manufacture volatile fruit-flavor concentrates are required to file an application so requesting. ATF uses the application information to identify persons responsible for such manufacture, since these products contain ethyl alcohol and have potential for use as alcoholic beverages with consequent loss of revenue. The application constitutes registry of a still, a statutory requirement.
Respondents: Businesses or other for-profit.
Estimated Number of Respondents: 10.
Estimated Burden Hours Per Respondent: 3 hours.
Frequency of Response: On occasion.
Estimated Total Reporting Burden: 30 hours.

OMB Number: 1512-098.
Form Number: ATF F 5520.2 and ATF REC 5520/1.
Type of Review: Extension.
Title: Annual Report of Concentrate Manufacturers (ATF F 5520.2) Usual and Customary Business Records—Volatile Fruit Flavor Concentrate Plants (ATF REC 5520/1).
Description: Volatile Fruit Flavor Concentrate (VFFC) manufacturers are regulated because the products they produce contain ethyl alcohol which can be diverted to untaxpaid beverage use. Records required are usual and customary business records of receipt and transfer. The required annual report provides a basis for statistics concerning this industry. Records and the report are audited to protect the revenue.
Respondents: Businesses or other for-profit.
Estimated Number of Respondents: 90.
Estimated Burden Hours Per Respondent: 20 minutes.
Frequency of Response: Annually.
Estimated Total Reporting Burden: 30 hours.

OMB Number: 1512-0292.
Form Number: ATF REC 5120/2.
Type of Review: Extension.
Title: Letterhead Applications and Notices Relating to Wine.
Description: Letterhead applications and notices relating to wine are required to ensure that the intended activity will not jeopardize the revenue or defraud consumers.
Respondents: Businesses or other for-profit, Small businesses or organizations.
Estimated Number of Respondents: 1,650.
Estimated Burden Hours Per Respondent: 30 minutes.
Frequency of Response: On occasion.
Estimated Total Reporting Burden: 825 hours.

OMB Number: 1512-0384.
Form Number: ATF REC 5620/2.
Type of Review: Extension.
Title: Airlines Withdrawing Stock From Customs Custody.
Description: Airlines may withdraw tax-exempt distilled spirits, wine and beer from Customs custody for foreign flights. Required record shows amount of spirits and wines withdrawn and flight identification; also has Customs certification. Enables ATF to verify that tax is not due; allows distilled spirits and wines to be traced and maintains accountability. Protects tax revenues.
Respondents: Businesses or other for-profit.
Estimated Number of Recordkeepers: 25.
Estimated Burden Hours Per Recordkeeper: 100 hours.
Frequency of Response: Other.
Estimated Total Reporting Burden: 2,500 hours.

OMB Number: 1512-0392.
Form Number: ATF REC 5190/1.
Type of Review: Extension.
Title: Records of Things of Value to Retailers, and Occasional Letter Reports From Industry Members Regarding Information on Sponsorships, Advertisements, Promotions, etc., Under the Federal Alcohol Administration Act.
Description: These records (bills of sale, invoices) and occasional letter reports are used to show compliance with provisions of the Federal Alcohol Administration Act which prevents wholesalers, producers, or importers from giving things of value to retail liquor dealers, and prohibits industry members from conducting certain types of sponsorships, advertisements, promotions, etc.

Respondents: Individuals or households, Businesses or other for-profit, Small businesses or organizations.
Estimated Number of Respondents/ Recordkeepers: 12,665.
Estimated Burden Hours Per Respondent/Recordkeeper: 1 hour.
Frequency of Response: On occasion.
Estimated Total Reporting/ Recordkeeping Burden: 51 hours.
Clearance Officer: Robert N. Hogarth (202) 927-8930, Bureau of Alcohol, Tobacco and Firearms, room 3200, 650 Massachusetts Avenue, NW., Washington, DC 20226.
OMB Reviewer: Milo Sunderhauf (202) 395-6880, Office of Management and Budget, room 3001, New Executive Office Building, Washington, DC 20503.

Lois K. Holland,
Departmental Reports Management Officer.
[FR Doc. 92-17466 Filed 7-23-92; 8:45 am]
BILLING CODE 4810-31-M

Public Information Collection Requirements Submitted to OMB for Review

Dated: July 13, 1992.

The Department of Treasury has submitted the following public information collection requirement(s) to OMB for review and clearance under the Paperwork Reduction Act of 1980, Public Law 96-511. Copies of the submission(s) may be obtained by calling the Treasury Bureau Clearance Officer listed. Comments regarding this information collection should be addressed to the OMB reviewer listed and to the Treasury Department Clearance Officer, Department of the Treasury, room 3171 Treasury Annex, 1500 Pennsylvania Avenue, NW., Washington, DC 20220.

Internal Revenue Service

OMB Number: 1545-0047.
Form Number: IRS Form 990 and Schedule A (Form 990).
Type of Review: Revision.
Title: Return of Organization Exempt From Income Tax Under section 501(c) of the Internal Revenue Code (except black lung benefit trust or private foundation) or section 4947(a)(1) Charitable Trust (Form 990). Organization Exempt Under section 501(c)(3) (except private foundation), 501(e), 501(f), 501(k), or section 4947(a)(1) Charitable Trust, Supplementary Information (Schedule A (Form 990)).
Description: Form 990 is needed to determine that Internal Revenue Code (IRC) section 501(a) tax-exempt organizations fulfill the operating conditions of their exemption. Schedule A (Form 990) is used to elicit special information from section 501(c)(3) organizations. IRS uses the information from these forms to determine if the filers are operating within the rules of their exemption.
Respondents: Non-profit institutions.
Estimated Number of Respondents/ Recordkeepers: 327,953.
Estimated Burden Hours Per Respondent/Recordkeeper:

	Form 990	Schedule A
Recordkeeping	84 hrs., 54 min.	43 hrs., 32 min.
Learning about the law, or the form.	15 hrs., 30 min.	8 hrs., 56 min.
Preparing the form	20 hrs., 22 min.	10 hrs., 2 min.
Copying, assembling, and sending the form to the IRS.	48 min	0

Frequency of Response: Annually.
Estimated Total Reporting/ Recordkeeping Burden: 47,795,514 hours.
Clearance Officer: Garrick Shear, (202) 535-4297, Internal Revenue Service, room 5571, 1111 Constitution Avenue, NW., Washington, DC 20224.
OMB Reviewer: Milo Sunderhauf, (202) 395-6880, Office of Management and Budget, room 3001, New Executive Office Building, Washington, DC 20503.

Lois K. Holland,
Departmental Reports Management Officer.
[FR Doc. 92-17468 Filed 7-23-92; 8:45 am]
BILLING CODE 4830-01-M

Public Information Collection Requirements Submitted to OMB for Review

Dated: July 17, 1992.

The Department of Treasury has submitted the following public information collection requirement(s) to OMB for review and clearance under the Paperwork Reduction Act of 1980, Public Law 96-511. Copies of the submission(s) may be obtained by calling the Treasury Bureau Clearance Officer listed. Comments regarding this information collection should be addressed to the OMB reviewer listed and to the Treasury Department Clearance Officer, Department of the Treasury, Room 3171 Treasury Annex, 1500 Pennsylvania Avenue, NW., Washington, DC 20220.

Internal Revenue Service

OMB Number: 1545-0971.
Form Number: IRS Form 1041-ES.
Type of Review: Extension.
Title: Estimated Income Tax for Fiduciaries.
Description: Form 1041-ES is used by fiduciaries of estates and trusts to make estimated tax payments if their estimated tax is $500 or more. IRS uses the data to credit taxpayers' accounts and to determine if the estimates tax has been properly computed and timely paid.
Respondents: Businesses or other for-profit, Small businesses or organizations.
Estimated Number of Respondents/ Recordkeepers: 300,000.
Estimated Burden Hours Per Respondent/Recordkeeper:
Recordkeeping—20 minutes.
Learning about the law or the form—10 minutes.
Preparing the form—1 hour, 23 minutes.
Copying, assembling, and sending the form to the IRS—20 minutes.
Frequency of Response: Quarterly.
Estimated Total Reporting/ Recordkeeping Burden: 2,664,000 hours.
Clearance Officer: Garrick Shear (202) 535-4297, Internal Revenue Service, Room 5571, 1111 Constitution Avenue, NW., Washington, DC 20224.
OMB Reviewer: Milo Sunderhauf (202) 395-6880, Office of Management and Budget, Room 3001, New Executive Office Building, Washington, DC 20503.

Lois K. Holland,
Departmental Reports, Management Officer.
[FR Doc. 92-17478 Filed 7-23-92; 8:45 am]
BILLING CODE 4830-01-M

Public Information Collection Requirement Submitted to OMB for Review

Dated July 20, 1992.

The Department of Treasury has submitted the following public information collection requirement(s) to OMB for review and clearance under the Paperwork Reduction Act of 1980, Public Law 96-511. Copies of the submission(s) may be obtained by calling the Treasury Bureau Clearance Officer listed. Comments regarding this information collection should be addressed to the OMB reviewer listed and to the Treasury Department Clearance Officer, Department of the Treasury, Room 3171 Treasury Annex, 1500 Pennsylvania Avenue, NW., Washington, DC 20220.

U.S. Customs Service

OMB Number: 1515-0050.
Form Number: CF 3347 and CF 3347A.
Type of Review: Reinstatement.

Title: Declaration of Owner of Merchandise Obtained (Other than) in Pursuance of a Purchase or Agreement to Purchase (CF 3347) and Declaration of Importer of Record When Entry is Made by an Agent (CF 3347A).
Description: CF 3347 and CF 3347A allow an agent to submit, subsequent to making entry, the declaration of the importer of record which is required by statute. Also, CF 3347 and CF 3347A permit a nominal importer of record to file the declaration of the actual owner and be relieved of statutory liability for the payment of increased duties.
Respondents: Businesses or other for-profit.
Estimated Number of Respondents: 950.
Estimated Burden Hours Per Respondent: 5 minutes.
Frequency of Response: On occasion.
Estimated Total Reporting Burden: 435 hours.
OMB Number: 1515-0148.
Form Number: CF 331.
Type of Review: Extension.
Title: Manufacturing Drawback Entry and/or Certificates.
Description: The CF 331 serves as an entry, a certificate of manufacture and delivery (or combination), or a certificate of imported merchandise, necessary in the filing of a claim for a refund of duty and/or Internal Revenue tax paid.
Respondents: Individuals or households, Businesses or other for-profit, Small businesses or organizations.
Estimated Number of Respondents/Recordkeepers: 3,500.
Estimated Burden Hours Per Respondent/Recordkeeper: 20 minutes.
Frequency of Response: On occasion.
Estimated Total Reporting Burden: 124,998 hours.
Clearance Officer: Ralph Meyer (202) 566-9182, U.S. Customs Service, Paperwork Management Branch, Room 6316, 1301 Constitution Avenue, NW., Washington, DC 20229.
OMB Reviewer: Milo Sunderhauf (202) 395-6880, Office of Management and Budget, Room 3001, New Executive Office Building, Washington, DC 20503.

Lois K. Holland,
Departmental Reports, Management Officer.
[FR Doc. 92-17479 Filed 7-23-92; 8:45 am]
BILLING CODE 4820-02-M

Public Information Collection Requirements Submitted to OMB for Review

Date: July 17, 1992.

The Department of Treasury has submitted the following public information collection requirement(s) to OMB for review and clearance under the Paperwork Reduction Act of 1980, Public Law 96-511. Copies of the submission(s) may be obtained by calling the Treasury Bureau Clearance Officer listed. Comments regarding this information collection should be addressed to the OMB reviewer listed and to the Treasury Department Clearance Officer, Department of the Treasury, room 3171, Treasury Annex, 1500 Pennsylvania Avenue, NW., Washington, DC 20220.

Internal Revenue Service

OMB Number: 1545-0702.
Form Number: IRS Form 8023.
Type of Review: Extension.
Title: Corporate Qualified Stock Purchase Elections.
Description: Form 8023 is used by corporations that acquire the stock of another corporation to elect to treat the acquisition of stock as an acquisition of the corporation's assets. IRS uses Form 8023 to determine if the selling corporation reports the sale of its assets on its income tax return and to determine if the deduction for depreciation is correctly computed.
Respondents: Businesses or other for-profit.
Estimated Number of Respondents/Recordkeepers: 201.
Estimated Burden Hours Per Respondent/Recordkeeper:
Recordkeeping—8 hours, 22 minutes.
Learning about the law or the form—1 hour, 12 minutes.
Preparing and sending the form to the IRS—1 hour, 23 minutes.
Frequency of Response: On occasion.
Estimated Total Reporting/Recordkeeping Burden: 2,199 hours.
Clearance Officer: Garrick Shear, (202) 535-4297, Internal Revenue Service, room 5571, 1111 Constitution Avenue NW., Washington, DC 20224.
OMB Reviewer: Milo Sunderhauf, (202) 395-6880, Office of Management and Budget, room 3001, New Executive Office Building, Washington, DC 20503.

Lois K. Holland,
Departmental Reports Management Officer.
[FR Doc. 92-17476 Filed 7-23-92; 8:45 am]
BILLING CODE 4830-01-M

Public Information Collection Requirements Submitted to OMB for Review

Date: July 17, 1992.

The Department of Treasury has submitted the following public information collection requirement(s) to OMB for review and clearance under the Paperwork Reduction Act of 1980, Public Law 96-511. Copies of the submission(s) may be obtained by calling the Treasury Bureau Clearance Officer listed. Comments regarding this information collection should be addressed to the OMB reviewer listed and to the Treasury Department Clearance Officer, Department of the Treasury, room 3171, Treasury Annex, 1500 Pennsylvania Avenue NW., Washington, DC 20220.

Internal Revenue Service

OMB Number: 1545-0930.
Form Number: IRS Form 8396.
Type of Review: Extension.
Title: Mortgage Interest Credit.
Description: Used by individual taxpayers to claim a credit against their tax for a portion of the interest paid on a home mortgage in connection with a qualified mortgage credit certificate. IRC section 25 allows the credit and IRC section 163(g) provides that the interest deduction on Schedule A will be reduced by the credit.
Respondents: Individuals or households.
Estimated Number of Respondents/Recordkeepers: 30,000.
Estimated Burden Hours Per Respondent/Recordkeeper:
Recordkeeping—46 minutes.
Learning about the law or the form—5 minutes.
Preparing the form—39 minutes.
Copying, assembling, and sending the form to the IRS—20 minutes.
Frequency of Response: Annually.
Estimated Total Reporting/Recordkeeping Burden: 52,200 hours.
Clearance Officer: Garrick Shear (202) 535-4297, Internal Revenue Service, room 5571, 1111 Constitution Avenue NW., Washington, DC 20224.
OMB Reviewer: Milo Sunderhauf (202) 395-6880, Office of Management and Budget, room 3001, New Executive Office Building, Washington, DC 20503.

Lois K. Holland,
Departmental Reports Management Officer.
[FR Doc. 92-17477 Filed 7-23-92; 8:45 am]
BILLING CODE 4830-01-M

Public Information Collection Requirements Submitted to OMB for Review

Dated: July 20, 1992.

The Department of Treasury has submitted the following public information collection requirement(s) to OMB for review and clearance under the Paperwork Reduction Act of 1980, Public Law 96-511. Copies of the

submission(s) may be obtained by calling the Treasury Bureau Clearance Officer listed. Comments regarding this information collection should be addressed to the OMB reviewer listed and to the Treasury Department Clearance Officer, Department of the Treasury, Room 3171 Treasury Annex, 1500 Pennsylvania Avenue, NW., Washington, DC 20220.

Internal Revenue Service

OMB Number: 1545–0042
Form Number: IRS Form 970
Type of Review: Extension
Title: Application to Use LIFO Inventory Method
Description: Form 970 is filed by individuals, partnerships, trusts, estates, or corporations to elect to use the LIFO inventory method or to extend to LIFO method to additional goods. The IRS uses Form 970 to determine if the election was properly made.
Respondents: Individuals or households, Farms, Businesses or other for-profit, Small businesses or organizations
Estimated Number of Respondents/ Recordkeepers: 3,000
Estimated Burden Hours Per Respondent/Recordkeeper:
Recordkeeping—8 hours, 37 minutes
Learning about the law or the form—1 hour, 35 minutes
Preparing and sending the form to the IRS—1 hour, 48 minutes
Frequency of Response: On occasion
Estimated Total Reporting/ Recordkeeping Burden: 36,000 hours
OMB Number: 1545–0240
Form Number: IRS Form 6118
Type of Review: Extension
Title: Claim of Income Tax Return Preparers
Description: Form 6118 is used by preparers to file for a refund of penalties incorrectly charged. The information enables the IRS to process the claim and have the refund issued to the tax return preparer.
Respondents: Individuals or households, Businesses or other for-profit, Small businesses or organizations
Estimated Number of Respondents/ Recordkeepers: 10,000
Estimated Burden Hours Per Respondent/Recordkeepers:
Recordkeeping—13 minutes
Learning about the law of the form—11 minutes
Preparing the form—8 minutes
Copying, assembling, and sending the form to the IRS—20 minutes
Frequency of Response: On occasion
Estimated Total Reporting/ Recordkeeping Burden: 8,900 hours
OMB Number: 1545–1014.
Form Number: IRS Form 1066 and Schedule Q (Form 1066).
Type of Review: Revision.
Title: U.S. Real Estate Mortgage Investment Conduit Tax Return (Form 1066). Quarterly Notice of Residual Interest Holder of REMIC Taxable Income or Net Loss Allocation (Schedule Q).
Description: Form 1066 and Schedule Q (Form 1066) are used by a real estate mortgage investment conduit (REMIC) to figure its tax liability and income and other tax-related information to pass through to its residual holders. IRS uses the information to determine the correct tax liability of the REMIC and its residual holders.
Respondents: Businesses or other for-profit, Small businesses or organizations.
Estimated Number of Respondents/ Recordkeepers: 3,910.
Estimated Burden Hours Per Respondent/Recordkeeper:

	Form 1066	Schedule O
Recordkeeping	28 hr., 28 min.	6 hr., 13 min.
Learning about the law or the form.	6 hr., 29 min.	1 hr., 16 min.
Preparing the form	9 hr., 7 min.	2 hr., 21 min.
Copying, assembling, and sending the form to the IRS.	32 min.	16 min.

Frequency of Response: Annually.
Estimated Total Reporting/ Recordkeeping Burden: 569,296 hours.
Clearance Officer: Garrick Shear (202) 535–4297; Internal Revenue Service, room 5571, 1111 Constitution Avenue, NW., Washington, DC 20224.
OMB Reviewer: Milo Sunderhauf (202) 395–6880, Office of Management and Budget, room 3001, New Executive Office Building, Washington, DC 20503.

Lois K. Holland,
Departmental Reports Management Officer.

[FR Doc. 92–17480 Filed 7–23–92; 8:45 am]
BILLING CODE 4830–01–M

Sunshine Act Meetings

Federal Register
Vol. 57, No. 143
Friday, July 24, 1992

This section of the FEDERAL REGISTER contains notices of meetings published under the "Government in the Sunshine Act" (Pub. L. 94-409) 5 U.S.C. 552b(e)(3).

DEPARTMENT OF AGRICULTURE

AGENCY: Rural Telephone Bank.

ACTION: Regular Meeting of the Board of Directors.

TIME AND DATE: 9 a.m., Wednesday, August 5, 1992.

PLACE: Salon I, Ballroom Level, The Ritz-Carlton, 401 Ward Parkway, Kansas City, Missouri 64112.

STATUS: Open.

MATTERS TO BE CONSIDERED: The following matters have been placed on the agenda for the open Board of Directors meeting:

1. Call to Order.
2. Approval of Minutes of the May 19, 1992, Board Meeting.
3. Report on Loans Approved in the Third Quarter of FY 1992.
4. Review of Financial Statements for the Third Quarter of FY 1992.
5. Report on Requests for Waiver of Prepayment Premium.
6. Privatization Committee Report.
7. Prepayment Committee Report.
8. Effect of Federal Credit Reform Act on Interest Rates for Borrowers.
9. Consideration of Resolution to Replace Lost Stock Certificate.
10. Consideration of Resolution to Declare C Stock Dividend.
11. Consideration of Resolution to Adopt Date, Time, and Place for 10th Biennial Stockholders' Meeting.
12. Consideration of Resolution to Adopt Dates for Future Board Meetings.
13. Adjournment.

CONTACT PERSON FOR MORE INFORMATION: Matthew P. Link, Assistant Secretary, Rural Telephone Bank (202) 720-0530.

Dated: July 20, 1992.

James B. Huff, Sr.,

Governor.

[FR Doc. 92-17670 Filed 7-22-92; 2:00 pm]

BILLING CODE 3410-15-F

FARM CREDIT ADMINISTRATION

Farm Credit Administration Board; Regular Meeting

SUMMARY: Notice is hereby given, pursuant to the Government in the Sunshine Act (5 U.S.C. 552b(e)(3)), that the October 8, 1992 regular meeting of the Farm Credit Administration Board (Board) will not be held and that a special meeting of the Board is scheduled for Thursday, October 1, 1992. An agenda for this meeting will be published at a later date.

FOR FURTHER INFORMATION CONTACT: Curtis M. Anderson, Secretary to the Farm Credit Administration Board, (703) 883-4003, TDD (703) 883-4444.

ADDRESS: Farm Credit Administration, 1501 Farm Credit Drive, McLean, Virginia 22102-5090.

Dated: July 21, 1992.

Curtis M. Anderson,

Secretary, Farm Credit Administration Board.

[FR Doc. 92-17596 Filed 7-22-92; 11:39 am]

BILLING CODE 6705-01-M

BOARD OF GOVERNORS OF THE FEDERAL RESERVE SYSTEM

TIME AND DATE: 10:00 a.m., Wednesday, July 29, 1992.

PLACE: Marriner S. Eccles Federal Reserve Board Building, C Street entrance between 20th and 21st Streets, N.W., Washington, D.C. 20551.

STATUS: Open.

MATTERS TO BE CONSIDERED:

Summary Agenda

Because of its routine nature, no substantive discussion of the following item is anticipated. This matter will be voted on without discussion unless a member of the Board requests that the item be moved to the discussion agenda.

1. Proposed amendments to Regulations 2 (Truth in Lending) relating to home equity lines of credit. (Proposed earlier for public comment; Docket No. R-0743)

Discussion Agenda

2. Publication for comment of proposed amendments to Regulation C (Home Mortgage Disclosure) to implement section 224 of the Federal Deposit Insurance Corporation Improvement Act of 1991 (FDICIA) regarding setting an exemption standard for nondepository lenders.
3. Any items carried forward from a previously announced meeting.

Note: This meeting will be recorded for the benefit of those unable to attend. Cassettes will be available for listening in the Board's Freedom of Information Office, and copies may be ordered for $5 per cassette by calling (202) 452-3684 or by writing to:

Freedom of Information Office, Board of Governors of the Federal Reserve System, Washington, D.C. 20551

CONTACT PERSON FOR MORE INFORMATION: Mr. Joseph R. Coyne, Assistant to the Board; (202) 452-3204.

Dated: July 22, 1992.

Jennifer J. Johnson,

Associate Secretary of the Board.

[FR Doc. 92-17623 Filed 7-22-92; 11:40 am]

BILLING CODE 6210-01-M

BOARD OF GOVERNORS OF THE FEDERAL RESERVE SYSTEM

TIME AND DATE: Approximately 10:30 a.m., Wednesday, July 29, 1992, following a recess at the conclusion of the open meeting.

PLACE: Marriner S. Eccles Federal Reserve Board Building, C Street entrance between 20th and 21st Streets, NW., Washington, DC 20551.

STATUS: Closed.

MATTERS TO BE CONSIDERED:

1. Personnel actions (appointments, promotions, assignments, reassignments, and salary actions) involving individual Federal Reserve System employees.
2. Any items carried forward from a previously announced meeting.

CONTACT PERSON FOR MORE INFORMATION: Mr. Joseph R. Coyne, Assistant to the Board; (202) 452-3204. You may call (202) 452-3207, beginning at approximately 5 p.m. two business days before this meeting, for a recorded announcement of bank and bank holding company applications scheduled for the meeting.

Dated: July 21, 1992.

Jennifer J. Johnson,

Associate Secretary of the Board.

[FR Doc. 92-17623 Filed 7-22-92; 11:40 am]

BILLING CODE 6210-01-M

DEPARTMENT OF JUSTICE

UNITED STATES PAROLE COMMISSION

Public Announcement

Pursuant To The Government In the Sunshine Act

[Public Law 94-409) [5 U.S.C. Section 552b]

TIME AND DATE: 1:00 p.m., Tuesday, July 28, 1992.

PLACE: 5550 Friendship Boulevard, Chevy Chase, Maryland, 20815.

STATUS: Open.

MATTERS TO BE CONSIDERED: The following matters have been placed on the agenda for the open Parole Commission meeting:

1. Approval of minutes of previous Commission meeting.

2. Reports from the Chairman, Commissioners, Legal, Case Operations, Program Coordinator, and Administrative Sections.
3. Discussion on Enhanced Supervision.
4. Discussion on Voting On Original Jurisdiction Cases.
5. Discussion on Omitted Special Conditions.
6. Discussion of Procedures to be followed when a Release Date is Advanced under 28 C.F.R. Sec. 2.28(e) for Electronic Monitoring or CCC Placement.
7. Discussion on unique issues regarding Military Prisoners.
8. Discussion of Prehearing Disclosure of Codefendant Material.
9. Discussion on Redrafted Procedures for 28 C.F.R. 2.30 Reopenings.
10. Overview of the Policy and Practices of the Community Confinement Program.
11. Discussion on warrants held in abeyance.
12. Modification of Definition of "Value of the Property for Theft and Fraud Offenses."
13. Proposal of a "Limited Contract Parole Program."
14. Discussion on the Commission s AIDS Policy and Special Conditions.
15. Defining the Effect of a Conspiracy Conviction on a Prisoner's Accountability for Crimes Committed By his Co-conspirators.
16. Amendment of 28 C.F.R. Sec. 2.66, Paroling Policy For Prisoners Serving Aggregate U.S. and D.C. Code Sentences.
17 Approval of the Commission s budget for Fiscal Year 1994 prior to submission to the Office of Management and Budget.

AGENCY CONTACT: Tom Kowalski, Case Operations, United States Parole Commission, (301) 492-5962.

Dated: July 20, 1992.

Michael A. Stover,

General Counsel, U.S. Parole Commission.

[FR Doc. 92-17690 Filed 7-22-92; 3:20 pm]

BILLING CODE 4410-01-M

DEPARTMENT OF JUSTICE

UNITED STATES PAROLE COMMISSION

Public Announcement

Pursuant To The Government In the Sunshine Act
(Public Law 94-409) [5 U.S.C. Section 552b]

DATE AND TIME: Tuesday, July 28, 1992, 9:30 a.m., Eastern Daylight Time.

PLACE: 5550 Friendship Boulevard, Chevy Chase, Maryland, 20815.

STATUS: Closed—Meeting.

MATTER CONSIDERED: Appeals to the Commission involving approximately sixteen cases decided by the National Commissioners pursuant to a reference under 28 CFR 2.27. These cases originally heard by an examiner panel wherein inmates of Federal prisons have applied for parole or are contesting revocation of parole or mandatory release.

AGENCY CONTACT: Jeffrey Kostbar, Case Analyst, National Appeals Board, United States Parole Commission, (301) 492-5968.

Dated: July 20, 1992.

Michael A. Stover,

General Counsel, U.S. Parole Commission.

[FR Doc. 92-17691 Filed 7-22-92; 3:20 pm]

BILLING CODE 4410-1-M

federal register

Friday
July 24, 1992

Part II

Environmental Protection Agency

40 CFR Parts 122, 123, and 130

Surface Water Toxics Control Program, Water Quality Planning and Management Program, and National Pollutant Discharge Elimination System; Rule and Proposed Rule

ENVIRONMENTAL PROTECTION AGENCY

40 CFR Parts 122, 123, and 130

[FRL-3979-8]

Surface Water Toxics Control Program and Water Quality Planning and Management Program

AGENCY: Environmental Protection Agency.

ACTION: Final rule.

SUMMARY: EPA is amending its regulations to respond directly to a court remand of a final rule interpreting section 304(1) of the Clean Water Act (CWA) issued on June 2, 1989 (54 FR 23868). Other amendments finalize regulations proposed on January 12, 1989 (54 FR 1300) to clarify requirements and consolidate reporting required by sections 303(d), 314(a), and 305(b) of the CWA. Another amendment corrects a citation to the CWA.

Section 308(a) of the Water Quality Act of 1987 added section 304(1) to the CWA to accelerate the control of toxic pollutants discharged into surface waters. Section 304(1) required States to identify those waters that are adversely affected by toxic, conventional, and nonconventional pollutants; to identify where additional controls are needed; and to prepare individual control strategies. These actions were to be accomplished according to an ambitious series of deadlines which have now passed (54 FR 23868, June 2, 1989). In today's action EPA is requiring that States identify additional point sources and toxic pollutants being discharged to impaired waters previously identified under section 304(1). However, no new ICSs are required by today's final rule.

As part of EPA's approach to identifying waters in need of additional controls, today's rule also modifies existing EPA regulations that implement section 303(d) of the CWA. Section 303(d) requires the States to identify, establish a priority ranking, and develop total maximum daily loads (TMDLs) for their waters that do not achieve or are not expected to achieve water quality standards. Section 303(d) requires that this list of waters be submitted to EPA "from time to time" for review and approval. In today's action EPA defines "from time to time" for purposes of this listing requirement to mean every two years coincident with submission of the section 305(b) report. Today's actions also clarify the information that is required to be submitted by the States with the section 303(d) list. In addition, EPA is promulgating amendments concerning requirements to report information on the quality of lakes pursuant to section 314(a) of the CWA.

EFFECTIVE DATE: This regulation shall be effective at 1 p.m. eastern standard time August 24, 1992. The requirements contained in § 130.7(d)(2) shall apply to State submittals made after the effective date of this regulation.

ADDRESSES: The record for this rulemaking is available at: U.S. Environmental Protection Agency, Library M2904 (PM-211-A), 401 M Street SW., Washington, DC 20460.

FOR FURTHER INFORMATION CONTACT: Bruce Newton, Chief, Watershed Branch, (202) 382-7076.

SUPPLEMENTARY INFORMATION:

I. Authority
II. Background
A. Overview of EPA's Water Quality Management Program
B. Section 304(1) of the CWA
C. Section 303(d) of the CWA
III. Scope of This Rule
A. New Section 304(1) Listing Requirements
1. Summary of Court Order
2. Response to Court Order
a. Changes to 40 CFR 130.10(d)
b. Changes to 40 CFR 123.46(a)
B. Sections 303(d) of the CWA and Amendments to 40 CFR Part 130
1. Introduction: Relationship of Section 303(d) of the CWA to EPA's Water Quality Planning and Management Program
2. Today's Final Action and Response to Comments Received on the Proposed Rule
a. Amendments to §§ 130.7 and 130.10
i. Identification of Waters and Listing Format
ii. Priority Ranking and Identifying Waters
iii. Identification of Pollutants
iv. Biennial Listing
v. Applicable Standard Definition
vi. Thermal Waters
vii. Documentation Factors
viii. Submission of Lists and EPA Approval
b. Amendments to 40 CFR 130.8
3. Summary of Public Notice
C. Technical Corrections
IV. Regulatory Analysis
A. Executive Order 12291
B. Paperwork Reduction Act
C. Regulatory Flexibility Act

I. Authority

This regulation is issued under the authority of the CWA, 33 U.S.C. 1251 et seq.

II. Background

A. Overview of EPA's Water Quality Management Program

Today's amendments deal with the identification of waterbodies that require the attention of regulatory agencies to ensure that water quality standards are attained and maintained. This is a necessary step of the water quality management process established by the Clean Water Act (CWA). Recently, EPA and the States have undertaken a number of activities to improve the water quality management process to address emerging pollution concerns. These activities include, among other things, adopting new water quality criteria for toxic chemicals and ecological measures (biocriteria), developing nonpoint source management programs, protecting wetlands and other critical habitats, and engaging the public through volunteer monitoring and greater participation in decision making. Sections 304(l) and 303(d) of the Clean Water Act are key elements of the water quality management process. Section 304(l) established a one-time requirement for States to identify waterbodies according to various categories of water quality impairment and to develop individual control strategies. Section 303(d) establishes a continuous process to identify water quality-limited waters, establish priorities, and develop water quality protection plans termed Total Maximum Daily Loads (TMDLs).

Many of the problems affecting the Nation's waters are best addressed through a comprehensive watershed protection process in which all sources and problems are considered cooperatively by multiple agencies with active participation by the affected public and local governments. EPA is encouraging more comprehensive watershed protection. One key initiative is improving the implementation of TMDL requirements contained in section 303(d). EPA has recently issued a guidance document on State and EPA implementation of section 303(d), Guidance for Water Quality-based Decisions: The TMDL Process, April, 1991 (EPA 440/4-91-001). The amendments today are part of this effort to improve the water quality management process.

Although today's actions concern separate statutory requirements, we are addressing them together for the following reasons. Certain of the activities involved in both provisions are similar in that they both require the States to identify and report impaired and threatened waterbodies. Second, to make the reporting less burdensome, many of the State commenters have requested that the various statutory listing requirements under sections 304(l), 303(d), 314(a), and 305(b) be coordinated and eventually consolidated. Finally, EPA wishes to emphasize that the process for TMDL development established under section 303(d) provides an effective means by

which the problems identified under the listing provisions of section 304(l) can be addressed. In particular, focused attention of specific waterbodies under section 303(d) will significantly improve the protection and restoration of water quality by encouraging cooperation between agencies, promoting greater public participation, and encouraging all problems in a watershed to be addressed comprehensively instead of in a piecemeal manner.

B. Section 304(l) of the Clean Water Act (CWA)

Seciton 308(a) of the Water Quality Act of 1987 (WQA) added section 304(l) to the CWA (hereafter referred to as section 304(l)). EPA adopted rules implementing section 304(l) on January 4, 1989 (54 FR 258) and June 2, 1989 (54 23868).

Section 304(l) of the CWA reinforced the State and EPA activities to identify and control point source discharges of toxic pollutants. Under section 304(l), the States were required to submit to EPA four lists and individual control strategies (ICSs) for review and approval by February 4, 1989. EPA was required to make approval or disapproval decisions on the lists and ICSs by June 4, 1989. EPA's approval or disapproval decisions were then published for public review. The public had 120 days to submit to EPA petitions and comments on the proposed decisions. EPA had until June 4, 1990 to respond to petitions or comments.

Section 304(l) required the States to submit to EPA four lists described as follows:

1. A(i) —A list of those waters in the State that, after the application of technology-based effluent limits, cannot reasonably be anticipated to attain or maintain water quality standards for priority pollutants adopted under section 303(c)(2)(B) of the CWA. This list is referred to as the "mini-list" or "A(i)" list;

2. A(ii) —A list of all waters that after application of technology-based effluent limits, cannot reasonably be anticipated to attain or maintain that water quality which shall assure protection of public health, public water supplies, agricultural and industrial uses, and the protection and propagation of a balanced population of shellfish, fish and wildlife, and allow recreational activities in and on the water. This list is referred to as the "long list" or "A(ii)" list;

3. B—A list of those waters that after application of technology-based effluent limits are not expected to achieve applicable water quality standards, due entirely or substantially to point source discharges of priority pollutants. In today's action this list is referred to as the "short list" or "B" list;

4. C—A list of the point sources of the priority pollutants which are believed to be preventing or impairing water quality for waters on the lists and the amount of each priority pollutant discharged by each point source. This list is referred to as the "facility list" or "C" list.

In addition, section 304(l)(1)(D) required that the State prepare and submit to EPA an individual control strategy (ICS) that would achieve water quality standards through the reduction of the discharge of toxic pollutants from point sources to each identified water segment. In the June 2, 1989 final rule, EPA required that ICSs be prepared for each point source identified on the facility list.

The statutory language of section 304(l)(1)(B) required the States to list waters for which water quality standards will not be achieved due entirely or substantially to discharges from point sources of any toxic pollutants listed pursuant to section 307(a). The toxic pollutants identified under section 307(a) of the CWA are 65 categories and classes of pollutants that include thousands of compounds. EPA has designated 126 of these pollutants as "priority pollutants" because they are common, widely present chemicals for which toxicological data are available. The regulatory requirements controlling toxic pollutants under section 304(1) of the CWA focus on the 126 priority pollutants.

In the January 4, 1989 rule, EPA interpreted the statute to require that the facilities list ("C" list) identify those facilities that discharge only to waters that do not meet water quality standards due entirely or substantially to point source discharges of priority pollutants (the "short list" of waters). In the June 2, 1989 rule, EPA required that an ICS in the form of an NPDES permit be prepared for each facility identified. Thus, the facilities list was to consist only of facilities discharging toxic pollutants to waters on the short list, or "B" list, and ICSs were required for all facilities on the facilities list.

The Natural Resources Defense Council (NRDC) petitioned for review of EPA's January 4, 1989 regulation interpreting the facility list to include only facilities discharging to waters on the "B" list and interpreting the ICS requirement to apply only to waters on the "B" list. The Ninth Circuit Court of Appeals remanded that portion of the challenged section 304(1) regulation concerning the listing requirements. In *NRDC* v. *EPA*, 915 F.2d 1314 (9th Cir. 1990), the Ninth Circuit held that EPA erroneously interpreted paragraph C as requiring only the listing of point sources discharging toxic pollutants into the waters on the "B" list. The court reasoned that paragraph C unambiguously requires listing of point sources for waters "included on such lists" and the use of the plural "lists" must refer to all three lists. The Court's decision requires EPA to amend its regulations to require the States to identify all point sources discharging any toxic pollutant that is believed to be preventing or impairing the water quality of any stream segment listed to the "A(i)," "A(ii)," and "B" lists, and to indicate the amount of the toxic pollutant discharged by each source. The remand also requires EPA to reconsider its interpretation of ICS requirements under section 304(l)(1)(D). Today's action amends section 304(1) regulations in response to the Ninth Circuit Court's remand. In a proposed rule published elsewhere in this issue, EPA is soliciting comments on which facilities listed pursuant to this final rule will need ICSs.

C. Section 303(d) of the CWA

Section 303(d) (established by the 1972 Federal Water Pollution Control Act) requires that each State identify those waters for which existing required pollution controls are not stringent enough to implement State water quality standards. For these waters, States are required to establish total maximum daily loads (TMDLs) according to a priority ranking. The identified waters and loads are required to be submitted to EPA for approval from "time to time".

On January 11, 1985, EPA published a final rule (50 FR 1775) that established 40 CFR part 130 (Water Quality Planning and Management). This rule established certain requirements for State and local government water quality programs, including requirements related to implementation of section 303(d) of the CWA. The regulation did not specify dates for State compliance with the section 303(d) requirements, but reiterated the statutory provision calling for submissions from time to time.

At the same time that regulations implementing the requirements of section 304(l) were proposed on January 12, 1989 (54 FR 1300), new regulatory amendments pertaining to section 303(d) were also proposed. In order to build upon the significant amount of effort expended by the States and EPA to develop the section 304(l) lists, EPA proposed, under the authority of section 303(d), that the States continue identifying, listing, and reporting waters every two years.

Although the intent of the biennial listing proposal was to more effectively implement section 303(d) listing provisions by building on the section 304(l) listing efforts, many commenters were confused about the legal basis for the proposal and objected to it, stating that EPA lacked the authority under section 304(l) to establish the biennial listing requirements. EPA did not finalize the section 303(d) biennial listing proposal with the final section 304(l) rule and instead reopened the public comment period for the section 303(d) proposal on July 24, 1989 (54 FR 30765). The public comment period closed on September 22, 1989.

EPA is today promulgating a simplified version of the proposed section 303(d) listing requirements. The final rule provides States with the option of consolidating section 303(d) listing with the section 305(b) water quality reporting process, thus allowing use of the automated data system for section 305(b) to avoid duplicative reporting.

III. Scope of This Rule

This section discusses the actions being taken today in two parts. Part A describes EPA's amendments to parts 123 and 130 that respond to the Ninth Circuit's partial remand of EPA's regulation interpreting section 304(l)(1)(C). Part B describes the amendments made to part 130 that relate to the requirements of sections 303(d) and 314(a) and discusses the public comments received in response to the January 12, 1989 proposed rule and the July 24, 1989 reopening of the public comment period.

A. New Section 304(l) Listing Requirements

In the January 1989 final rule, EPA interpreted section 304(l)(1)(C) to require States to identify point sources discharging toxic pollutants only to waters on the short or "B" list. See 40 CFR 130.10(d)(3). States submitted their 304(l)(1)(C) facility lists in accordance with this interpretation.

1. Summary of Court Order

By opinion, on September 28, 1990, the U.S. Court of Appeals for the Ninth Circuit required EPA to amend its regulations at § 130.10(d)(3) to "require the states to identify all point sources discharging any toxic pollutant which is believed to be preventing or impairing the water quality of any stream segment listed under CWA §§ 304(l)(1) (A) and (B) and to indicate the amount of the toxic pollutant discharged by each source." *NRDC* v. *EPA*, 915 F.2d 1314, 1324 (9th Cir. 1990). Today's amendments fulfill this requirement.

2. Response to the Court Order on Section 304(l)

a. *Changes to 40 CFR 130.10(d).* In response to the court order, EPA is amending § 130.10(d)(3), which refers to the "C" list or facility list, by changing the wording from "such list" to "such lists." This amendment means that some point sources and amounts of priority pollutants discharged need to be identified for waters on the "A(i)" (mini) and "A(ii)" (long) lists. Pursuant to the regulations promulgated in 1989, States have already identified facilities discharging to waters on the "B" (short) list. In order to respond to today's action, States should use existing, readily available information to identify waters on their "A(i)" and "A(ii)" lists that are listed because the waters were impaired by priority pollutants. The States should then list any point sources believed to be discharging these priority pollutants to the listed waters. States must also identify the quantity of section 307(a) pollutant(s) being discharged to the listed water bodies from the newly identified point sources.

The requirements of the court order indicate that a point source must be listed if, as stated in § 130.10(d)(3), it is discharging a toxic pollutant "believed to be preventing or impairing" water quality for each segment of water on all lists (not just the "B" list). To comply with this requirement States must use, at a minimum, existing and readily available data to add any facilities to their existing "C" list (facility list) and otherwise follow procedures established in part 130 for the original section 304(l) lists. EPA will follow the procedures for approval or disapproval of the expanded list and ensure an opportunity for public review and comment (at the State or federal level). Because the lists of waters have already been established within the process required by the statute and regulations, the lists of waters need not be altered.

The court order leaves open the question of whether these additional submissions should list facilities discharging as of February 4, 1989; September 28, 1990 when the remand was issued; or the present. Similarly, it is unclear whether only existing and readily available water quality-related data as of February 4, 1989 should be used. Since the intent of section 304(l) is to be protective of water quality, the Agency would prefer identifying all facilities and pollutants contributing to the problem. However, in view of the short timeframe involved, EPA encourages the States to use discretion in the use of existing and available information. It may not be feasible to recreate the State data base to a given time period, especially if States have already revised their lists or water quality data. Therefore, the EPA is recommending that States use data and information that is readily available.

States are expected, as soon as possible, to compile and submit to the Regional Administrator for review and approval or disapproval the additions to the "C" list of point sources and amounts of toxic pollutants discharged. The new "C" lists must be submitted to EPA as soon as possible because the deadline for submission passed while the original regulations were being reviewed by the court. As a matter of policy guidance, EPA is requesting that States submit their lists within sixty days from the date of publication of these amendments. EPA notes that this would normally provide an unreasonably short amount of time for States to respond to these regulatory amendments. However, EPA has already notified the States of the listing requirements resulting from the Court remand and the requested schedule for submission.

A state's new "C" list does not need further documentation unless a State has changed its methodology from the initial listing, because EPA has already reviewed the documentation required in § 130.10(d)(6). However, EPA may request additional documentation of the decisions, under the procedures promulgated June 2, 1989. EPA shall review the new submissions according to the procedures set forth in 40 CFR 130.10(d)(8)–(10), except that the Regional Administrator shall approve or disapprove of the new lists by 60 days after publication of the rule plus 120 days (§ 130.10(d)(8)), January 20, 1993, and, when appropriate, shall implement the listing requirements and respond to public comments and petitions by 180 days after publication of the rule, plus one year § 130.10(d) (9) and (11)), January 20, 1994.

b. *Changes to 40 CFR 123.46(a).* EPA regulations at 40 CFR 123.46(a), which implement section 304(l)(1)(D) of the Clean Water Act, require ICSs for all facilities appearing on State "C" lists. This requirement at § 123.46(a) was based on EPA's interpretation of section 304(l)(1)(C), under which facilities would be listed on State "C" lists only if they were found to be discharging toxic pollutants to waters on State "B" lists. However, as discussed above in *NRDC* v. *EPA*, the Ninth Circuit invalidated EPA's interpretation of section 304(l)(1)(C) and required EPA to amend

its regulations at § 130.10(d)(3) to reflect the Court's interpretation that facilities discharging toxic pollutants to waters on State "A" lists should also appear on State "C" lists. In today's rule, EPA is changing the wording of § 123.46(a) in order to maintain the original meaning of those regulations pending reconsideration of the scope of the ICS requirement.

Section 123.46(a) previously required States to submit individual control strategies to EPA for each point source identified by the State pursuant to section 304(l)(1)(C). If that language were to remain as it is, today's change in § 130.10(d)(3) could be read to require, immediately, ICSs for each point source discharging toxic pollutants to waters listed on the "A" or "B" lists. Because the statute is ambiguous, if EPA were to implement such a requirement, it would normally do so only after an opportunity for public comment. Therefore, EPA is amending § 123.46(a) to require States to submit individual control strategies to EPA for each point source identified by the State pursuant to section 304(l)(1)(C) which discharges the toxic pollutant(s) of concern to a water identified by the State pursuant to section 304(l)(1)(B). This change is necessary to maintain the original meaning of the language at § 123.46(a) in light of today's amendment to § 130.10(d)(3). Most of the ICSs required under old and new § 123.46(a) have already been established. Under today's rule no additional ICSs are required.

The Ninth Circuit required EPA to reconsider its interpretation of section 304(l)(1)(D) of CWA. EPA is reconsidering its interpretation of section 304(l)(1)(D) to decide whether additional ICSs will be required, given the court's interpretation of section 304(l)(1)(C), and may find it necessary to amend its regulations at § 123.46(a). EPA intends to solicit public comment on its interpretation of the ICS requirement pursuant to section 304(l)(1)(D) of the CWA. Elsewhere in today's **Federal Register**, EPA is proposing options for interpreting section 304(l)(1)(D) in light of the decision of the U.S. Court of Appeals for the Ninth Circuit. This proposal will directly address the question of whether to amend § 123.46(a) to reflect a requirement to submit additional ICSs.

The purpose of today's amendment to the section 304(l) regulations is to correct EPA's interpretation of the CWA as required by the court. Therefore, the rulemaking is properly classified as an interpretive rule, see *United Technologies Corporation* v. *EPA*, 821 F. 2d 714, 718 (D.C. Cir. 1987), in that it corrects an erroneous interpretation of the statute and does not "create new law, rights or duties," *Citizens to Save Spencer County* v. *EPA*, 600 F. 2d, 844, 876 n. 153 (D.C. Cir. 1979). The Administrative Procedure Act (APA) specifically excludes "interpretive" rules from its notice and comment procedures. 5 U.S.C. 553(b)(A).

B. Section 303(d) of the CWA and Amendments to §§ 130.7, 130.8, and 130.10

1. Introduction: Relationship of Section 303(d) of the CWA and EPA's Water Quality Planning and Management Program

EPA's water quality planning and management regulations are established under the authority of several sections of the CWA, including sections 106, 205(g), 205(j), 208, 303, 304(l), 305 and 501. Part 130 sets out the planning and management activities to be undertaken by States including establishment of water quality standards, water quality monitoring, the development of lists of impaired waters, the development of individual control strategies for certain pollution sources, the establishment of TMDLs and the development of State-level continuing planning processes, water quality management plans, and biennial water quality reports.

Section 303(d) of the CWA requires that each State identify waters for which existing required pollution controls are not stringent enough to achieve State water quality standards. These waters are referred to as "water quality limited." The States are required to rank their water quality-limited segments by priority, and establish TMDLs for them. The list of identified waters, rankings and TMDLs are required to be submitted to EPA for approval.

Section 130.7(d) currently provides that the lists and TMDLs be submitted to EPA by the States "from time to time" for approval. No specific schedule is defined in the current regulation. Once the lists and TMDLs are approved, they are automatically incorporated into the State's current water quality management plans.

2. Today's Final Actions and Response to Comments Received on Section 303(d) Proposed Rule

This section discusses today's actions to amend EPA's Water Quality Planning and Management Regulations at 40 CFR 130.7, 130.8, and 130.10. The first part of this section describes the new requirements for identifying water quality-limited waters and reporting these waters to EPA. These requirements are established today by amending §§ 130.7 and 130.10. The second part of this section describes the amendments to § 130.8 which requires that the assessment of publicly owned lakes be reported by States to EPA in their water quality assessment (section 305(b)) reports.

This section is arranged according to major topics covered by today's actions. Each topic contains a summary of today's actions on that topic, presents the major issues raised by the comments during public notice and discusses substantive changes from proposed regulation.

a. *Amendments to §§ 130.7 and 130.10—i. Identification of waters and listing format.* Under the existing regulations, States are required to identify water quality-limited segments, establish a priority ranking for these waters, and develop Total Maximum Daily Loads (TMDLs). Today's amendments do not change these requirements. Today's actions specify that States submit their list of waters, including those waters targeted for TMDL development, to EPA every two years coincident with the section 305(b) report and provide documentation to support the States' determinations.

The amendments proposed on January 12, 1989 differed from today's final actions. The proposed amendments, would have required the States to develop three lists based on the following three separate subcategories of water quality-limited waters, similar in some respects to the format required for lists developed under section 304(l) of the CWA:

(i) List of waters where numeric water quality standards for priority pollutants are not achieved due to either point or nonpoint sources of pollution;

(ii) List of all waters which cannot achieve either numeric or narrative water quality standards for a priority pollutant due entirely or substantially to discharges from point sources; and

(iii) A list of waters still requiring TMDLs that do not fit under category (i) or (ii).

Together, the combination of lists in the three-list format would have included waters listed in the section 304(l) "long list," except for waters meeting the State standards but not meeting the fishable/swimmable goals of the Act. In the preamble to the proposed rule, EPA asked for comments on an alternate two-list format. The two-list format would have included one list of water quality-limited segments due to any discharges of the 307(a) toxic pollutants, ammonia, and chlorine from point or nonpoint sources (called the

"Toxics List"), and the second list would have included waters not achieving water quality standards due to all pollutants from either point or nonpoint sources.

Many commenters stated that the proposed listing requirements were very confusing. They contended that even if the two-list format was adopted, this would not facilitate the identification process. Many commenters indicated that the listing format that grouped together toxics with ammonia and chlorine would be inconsistent with the listing requirements for 304(l). Several commenters indicated that the proposed listing format continued to focus on point source discharges of section 307(a) pollutants whereas, under section 303(d), all water quality-limited waters are required to be identified and should include point and nonpoint source impacted waters.

Given these comments, it was apparent that there continued to be confusion about the relationship between the section 304(l) listing exercise and the identification requirements under section 303(d). The section 303(d) identification process existed prior to the implementation of the section 304(l) requirements. Today's actions clarify the existing requirements under section 303(d). However, the link to section 304(l) remains, in that a basic requirement of the listing processes under both sections 303(d) and 304(l) is to identify water quality-limited waters. While it is not EPA's intent for States to duplicate the section 304(l) listing exercise every two years, EPA recommends that the States use the information developed for the section 304(l) lists to develop the section 303(d) list of waters. Also the section 303(d) listing process will not be used to track the implementation of individual control strategies (ICS) that were required for point sources of toxic discharges under section 304(l). This will be tracked through other EPA mechanisms under the NPDES program.

One commenter suggested that EPA take time to review the results of the section 304(l) listing requirements prior to adopting the new listing format for section 303(d) waters. One commenter suggested a one-list format to identify those waters not meeting water quality standards, with each entry on the list accompanied by an explanation that identifies the cause of the problem for each entry, such as section 307(a) pollutant, point source, nonpoint source, etc.

EPA has reviewed the results of the section 304(l) listing requirements and has considered the objectives for the TMDL program, that is for States to identify water quality-limited waters and establish a priority ranking for TMDL development. With this in mind, today's amendments require the States to identify water quality-limited waters still requiring TMDLs in a single list format.

On January 12, 1989 EPA proposed that States identify waters for which applicable standards will not be achieved due to discharges from point sources of section 307(a) toxic pollutants. Parallel with this requirement was the identification of the point sources responsible for impairment of these waters. These proposed requirements are being dropped today. States and numerous other commenters objected to the use of the section 303(d) listing authority to identify point sources of pollutants. Many states indicted that the inclusion of a point source list in the section 305(b) report, as the proposal would have required, was not appropriate and would be a major departure from past section 305(b) reports which focused on waterbodies. Also, many commenters indicated that these requirements would, in effect, repeat the section 304(l) process every two years. EPA agrees with these comments. While actual sources contributing to water quality standards exceedances must be identified prior to TMDL development or NPDES permitting, EPA does not believe that the identification of individual sources necessarily must take place as part of the biennial listings of problem waterbodies under sections 303(d) and section 305(b). Therefore, EPA is removing the proposed point source listing requirement (paragraphs (b)(2)(ii) and (b)(9) of the January 12, 1989 proposed rule).

While States are not required to list specific point sources, EPA is suggesting that States use the section 305(b) automated data system source categories to characterize waterbodies that need TMDLs. Examples of these source categories are municipal discharges, industrial discharges, agriculture, silviculture, urban runoff, and construction. This information will be cross referenced using the section 305(b) Waterbody Identification Number.

ii. *Priority ranking, including identifying waters targeted for TMDL development.* Section 303(d) of the CWA currently requires that each State rank by priority their water quality-limited waters. Today's actions reaffirm the importance of priority ranking by the States and also adds specificity regarding how a State will meet this existing requirement.

The final amendments require that each State prioritize waters on its 303(d) list and, as part of this prioritization, identify the water quality-limited waters that are targeted through priority ranking for TMDL development over the next two years. The State's water quality planning and management activities should include the development and implementation of TMDLs for their water quality-limited waters, and the State's annual work program should reflect those TMDLs targeted for development and TMDL activities on an ongoing basis. The two-year time frame was selected to be consistent with the section 305(b) biennial reporting process. States should include in their identification of waters targeted for TMDL development both "complex" TMDLs that may cover a large watershed or address particularly challenging pollution problems and routine or "simple" TMDLs that may be developed as part of an NPDES permit reissuance.

Section 303(d) of the CWA currently requires that when setting priorities, States must consider the uses of identified waters and the severity of the pollution. These are the minimum, but not necessarily the only factors a State should consider in developing a priority ranking. EPA did not propose new amendments to describe other factors to consider, but in the July 24, 1989 notice to reopen the proposed amendments for comments, EPA did specifically request input on the issue of priority ranking and factors to consider. The comments received were used in the development of the EPA guidance document entitled "Guidance for Water Quality-based Decisions: The TMDL Process" (EPA 440/4-91-001). This document contains guidance on priority ranking of water quality-limited waters and describes how the ranking process should result in the targeting of waterbodies for TMDL development. Identification and scheduling of targeted waterbodies for the development of TMDLs are critical steps in the implementation of section 303(d) of the CWA.

As stated in the guidance document, targeting of high priority waters for TMDL development should reflect an evaluation of the relative value and benefit of waterbodies within the State and take into consideration the following: Risk to human health and aquatic life; degree of public interest and support; recreational, economic, and aesthetic importance of a particular waterbody; vulnerability or fragility of a particular waterbody as an aquatic habitat; immediate programmatic needs such as wasteload allocations for

permits or load allocations for best management practices (BMPs); water pollution problems identified during the development of the section 304(l) "long list;" and national policies and priorities such as those identified in EPA's Annual Operating Guidance.

The proposed amendments would have established a new paragraph (b)(7) requiring that a priority ranking be established for water quality-limited waters. However, as one commenter noted, this requirement also appeared in existing § 130.7(b)(1) which was not proposed to be changed. EPA feels that it would be redundant to include this requirement twice in its regulations, as proposed. Today's action moves the existing reference to priority ranking in paragraph 130.7(b)(1) to new 130.7(b)(4) where the identification of waters targeted for TMDL development in the next two years is discussed.

Although this priority ranking requirement is not new, many commenters indicated that the requirements for it were not clear. One commenter specifically requested a clarification of the existing requirement for submission to EPA of the priority ranking. Therefore, to satisfy the priority ranking requirement of section 303(d), to clarify the submission requirement, and to ensure that States proceed with the development of TMDLs for their water quality-limited waters, EPA, in paragraph (b)(4) of today's action, is requiring a priority ranking of all water quality-limited waters still requiring TMDLs and the identification of those water quality-limited waters that have been targeted through priority ranking to have TMDLs developed in the next two years. The waters targeted for TMDL development should be highlighted within the list of water quality-limited waters to be submitted every two years coincident with the section 305(b) report.

iii. *Identification of pollutants.* The existing regulations at § 130.7(b)(1)(iii) require that States "shall identify the pollutants causing or expected to cause violations of the water quality standards" for water quality-limited segments still requiring TMDLs. Today's amendments do not change this requirement. To identify water quality-limited waters that still require TMDLs, the particular pollutant causing the problem will usually be known. However, pollutants include both individual chemicals and characteristics such as nutrients, BOD, or toxicity. Moreover, many waters do not meet standards due to non-chemical problems, such as siltation. Therefore, EPA recommends the use of the existing cause classification system used in the section 305(b) water quality reporting process to identify pollutants causing water quality standards' exceedances in segments still requiring TMDLs.

EPA recommends that the States use the "cause categories" described in the "Guidelines for the Preparation of the 1992 State Water Quality Assessment (section 305(b)) Report" or the most recent guidelines issued by EPA for the section 305(b) report. The WBS provides for both the identification of specific water bodies as well as fields for identifying causes. While the cause categories in the WBS include both general and specific pollutants such as pesticides, priority organics, metals, ammonia, chlorine, and thermal modification, there is a mechanism for States to develop additional categories for such parameters as chromium, lead, trichloroethylene, specific habitat alterations, contaminated sediments, etc., as desired.

In the January 12, 1989 proposed amendments, a separate paragraph (b)(8) was proposed that duplicated the existing requirement at paragraph (b)(1) of section 130.7 to identify pollutants (which in today's actions has been moved to paragraph (b)(4)). One commenter indicated that this was redundant. EPA agrees. Therefore, in today's actions the proposed paragraph (b)(8) has been deleted.

iv. *Biennial listing.* EPA proposed a requirement for the submission of the section 303(d) list to EPA biennially within the water quality report required by section 305(b) of the CWA. The proposal also would have required the biennial identification of point sources discharging toxic pollutants to those waters where water quality problems are due entirely or substantially to point source discharges of toxic pollutants. Under today's final action the States have a choice to submit the section 303(d) list to EPA as a part of the section 305(b) report or separately with the section 305(b) report. In addition, there is no requirement for the identification and listing of point sources discharging toxic pollutants to those waters where such discharges are entirely or substantially causing the water quality problem.

Many States supported the proposed amendments that would have required States to submit their section 303(d) lists of waters in their biennial section 305(b) reports. Some commenters, however, disagreed with the biennial reporting for the following reasons:

(1) The level of effort would be similar to the level required for the section 304(l) list and therefore would be an excessive amount of work to be done every two years;

(2) Since the section 305(b) report is a vehicle some States use to generate support for and greater awareness of water quality programs, it is an inappropriate vehicle to specifically list point sources; and

(3) The inclusion of point sources would be a major departure from previous section 305(b) reports which focused on overall state water quality.

In response to these comments, EPA has lightened the reporting burden somewhat by eliminating from the final section 303(d) rule the requirement for multiple lists and the listing of point sources of toxic pollutants. In addition, EPA has decided to provide flexibility to those States that may wish to separate their section 303(d) lists from the section 305(d) reports. Under today's rule, States may include the section 303(d) lists in the section 305(b) reports or may submit them at the same time as the section 305(b) reports but under separate cover.

v. *Applicable standard definition.* In the January 1989 proposed rule EPA defined the term "applicable standard" for listing waters impacted by point source discharges of toxic pollutant as a numeric criterion for a toxic pollutant within State water quality standards or, where a State numeric criterion for a toxic pollutant is not established in State water quality standards, the State's narrative water quality standards interpreted by applying the EPA national water quality criteria on a chemical-by-chemical basis. This definition was also proposed for the section 304(l) listing requirement, and a modified version of it was ultimately promulgated under § 130.10(d) for the development of section 304(l) lists.

Forty-seven comments addressed this issue. Several commenters pointed out that this definition of applicable standard is not valid for listing under section 303(d) of the CWA. Section 303(d) requires the States to identify all impaired waters regardless of whether the impairment is due to toxic pollutants, other chemicals, heat, habitat, or other problems. The proposed definition for applicable standards deals only with the toxic pollutants. Generally, the commenters disagreed with the proposed requirement for interpreting narrative criteria, especially by "applying EPA national water quality criteria on a chemical-by-chemical basis." One commenter argued that narrative water quality criteria interpreted on a chemical-by-chemical basis would exclude those waters that are biologically impaired and that this

approach would not be consistent with proposed 40 CFR part 122 which provided for derivation of effluent limits to control whole effluent toxicity.

EPA agrees that the proposed definition is too narrowly focused on toxic pollutants to be applicable for identifying all waters pursuant to section 303(d). Therefore in today's final action the term "applicable standard" for the purposes of listing waters under section 303(d) is defined in § 130.7(b)(3) as those water quality standards established under section 303 of the Act, including numeric criteria, narrative criteria, waterbody uses and antidegradation requirements. In the case of a pollutant for which a numeric criterion has not been developed, a State should interpret its narrative criteria by applying a proposed state numeric criterion, an explicit State policy or regulation (such as applying a translator procedure developed pursuant to section 303(c)(2)(B) to derive numeric criteria for priority toxic pollutants), EPA national water quality criteria guidance developed under section 304(a) of the Act and supplemented with other relevant information, or by otherwise calculating on a case-by-case basis the ambient concentration of the pollutant that corresponds to attainment of the narrative criterion. Today's definition is consistent with EPA's Water Quality Standards regulation at 40 CFR part 131. EPA may disapprove a list that is based on a State interpretation of a narrative criterion that EPA finds unacceptable.

vi. *Thermal waters.* The existing regulations under § 130.7(b)(2) require States to identify waters impacted by thermal discharges to the extent that controls on thermal discharges are not sufficient to protect and allow propagation of a balanced indigenous population of shellfish, fish and wildlife. These waters are also subject to the TMDL process and are required to be identified with the list of water quality-limited waters described under § 130.7(b)(1). The regulations suggest that a second list covering only thermally-impacted waters may be required.

EPA received several comments requesting that the reporting requirements by the States be consolidated. To achieve this, today's final action requires the States to submit to EPA one list of water quality-limited waters requiring TMDLs. This list will include waters impacted by toxic, conventional, non-conventional pollutants and thermally impacted waters. In order to identify waters impacted by thermal discharges, States may use the "cause" categories in the section 305(b) automated data system which contains a field "thermal modification." A discussion of pollutant identification can be found elsewhere in this preamble.

vii. *Documentation factors.* Today's actions specify in § 130.7(b)(5) that the States must use, at a minimum, existing and readily available water quality related data and information to prepare the section 303(d) list of waters. EPA proposed sixteen categories of waters for which all existing and readily available information needed to be considered in preparation of sections 304(l) and 303(d) lists (54 FR 1300). These categories were finalized as documentation factors for the section 304(l) listing requirement (54 FR 23668).

In response to comments discussed below, EPA removed the proposed category, "waters on the section 303(d) list," and revised the remaining categories into four more generalized categories for section 303(d) lists. These four categories are the minimum data and information that a State must "assemble and evaluate" when developing its section 303(d) list. The four broad categories promulgated today are intended to include fifteen of the categories developed for listing under section 304(l) as follows:

(1) Waters identified in a State's most recent section 305(b) report as having impaired or threatened designated uses (130.10(d)(6)(i)–(iv), (viii), (xii), (xiv));

(2) Waters for which dilution calculations or predictive models indicate nonattainment of State water quality standards, either numeric or narrative (130.10(d)(6)(ix–xi));

(3) Waters with water quality problems reported by State, local or Federal agencies, members of the public, or academic institutions (130.10(d)(6)(vi)–(vii), (xiii), (xvi)); and

(4) Waters impaired or threatened by nonpoint sources and identified by States in submissions to EPA under section 319 of the CWA (130.10(d)(6)(xv));

Several commenters indicated that many of the sixteen categories were not appropriate for the section 303(d) list development, including the "fishable/swimmable" category, the category of waters on the section 303(d) list, categories concerning designated use impairment (e.g., closed shellfish waters), and the categories concerning dilution analyses for only point source discharges of toxic pollutants. Commenters requested addition of other categories, some site specific. In addition, many States expressed concern that redoing many of the specific, narrow dilution analyses and effluent toxicity tests every two years would be unnecessarily burdensome.

EPA agrees with commenters who felt that the category of waters that will not support the "fishable/swimmable" goals of the CWA could include waters that meet State water quality standards. Water quality standards consist of designated uses for waters, criteria sufficient to protect such uses, and an antidegradation policy to maintain existing uses and protect high quality waters. Therefore, some waters that are not designated fishable/swimmable can, nonetheless, meet State water quality standards. However, waters that are designated fishable/swimmable, but are not meeting that use, do not meet water quality standards. Waters that are not designated fishable/swimmable and that meet designated uses and applicable criteria should not be listed under section 303(d).

Several commenters expressed concern over the burden of listing and documentation to support the listing decisions. EPA agrees that the States should retain a certain amount of flexibility in developing their section 303(d) list, but at the same time States should be prepared to demonstrate to EPA that all existing and readily available data and information relevant to identifying water quality-limited waters are used to develop section 303(d) lists. Today's final action consolidates 15 of the 16 categories used to list section 304(l) waters into four broad categories to reflect EPA's position on use of existing and readily available information to develop section 303(d) lists.

There are additional reasons for consolidating the categories. Today's rule provides an option for the States to consolidate the section 303(d) listing requirement with the section 305(b) reporting process, since much of the analysis and data evaluation a State performs to develop the section 305(b) report is relevant to identifying water quality-limited waters under section 303(d). A number of categories among the sixteen proposed in January 1989, describe water quality problems that a State considers in developing its section 305(b) report. These categories are consolidated in today's rule under § 130.7(b)(5)(i). A number of the sixteen categories proposed were narrowly focussed on point sources of toxic pollutants as required for the section 304(l) lists. These categories have been broadened to include dilution calculations and predictive modeling that indicate nonpoint source impacts and impacts from pollutants other than

the priority pollutants and can be found in today's rule under § 130.7(b)(5)(ii). It is not expected that States will prepare dilution calculations on every point source discharger every two years, but they will need to consider the most recent analyses, often done during permit issuance.

The four categories included in today's regulation are not intended to exclude any information that is relevant to developing section 303(d) lists. States are required to use all existing and readily available data and information. For example, States should consider their section 304(1) lists and also available Toxic Chemical Release Inventory (TRI) data reported under the Emergency Planning and Community Right-to-Know Act.

Today's action specifies the minimum documentation the States must provide when submitting their section 303(d) list of waters. The requirements (described in paragraph (b)(6) under § 130.7) to submit documentation to EPA describing the data, information, and methodology used to develop the list, the rationale to exclude any particular category of information from consideration, and other reasonable information requested by EPA have not changed from the proposed language. Some commenters interpreted this requirement to mean that each water segment listed would have to be accompanied by a specific rationale for listing that particular water segment or water body and that the use of the words "demonstrate good cause" for not listing a waterbody puts the burden of proof on the States to justify exclusion of any waterbody. EPA is not necessarily requiring that listing decisions for each waterbody in the State be specifically documented as an initial matter; rather, today's rule requires documentation for the list as a whole. EPA may request documentation of specific waters during review, to justify how States addressed known water quality concerns in the list.

viii. *Submission of lists and EPA approval.* Section 303(d) and existing § 130.7 currently require each State to submit its list of water quality-limited waters "from time to time." Today's action establishes that, for the purposes of identifying water quality-limited waters still requiring TMDLs, "from time to time" means once every two years. The list of waters still needing TMDLs must also include a priority ranking and must identify the waters targeted for TMDL development during the next two years. Today's regulation makes no changes regarding the timing for TMDL submission. Such submissions should be made from time to time, when they are ready for EPA review.

Today's regulation specifies that the date for submission of the section 303(d) list of waters is the same as for submission of the section 305(b) report. The list may be submitted as part of the section 305(b) report or under separate cover. EPA is taking this action to consolidate the States' reporting requirements and allow the use of the section 305(b) automated data system to lessen the burden to the States.

The April 1991 program guidance suggested a submittal date of April 1, 1992, and most States have made their submissions. Today's rule provides that for the 1992 biennial submission, these lists are due no later than October 22, 1992. EPA believes that it is important for States developing TMDLs within the next two years and thereafter to have a reasonably up-to-date list of waters needing TMDLs. Today's requirement therefore ensures both that all States will have reasonably up-to-date lists within 90 days of publication of this rule and that the lists will be updated every two years thereafter. When a State makes their 1992 submission prior to the effective date of today's rule, or thereafter revises the list at EPA's request after the effective date of today's rule, the State list is not subject to the new requirements contained in these amendments.

Although most States supported consolidating reporting with the section 305(b) process, a few States and commenters argued that EPA does not have the authority to require biennial submissions of section 303(d) lists of waters. Section 303(d) requires States to identify and list the waters within its jurisdiction that do not or are not expected to achieve water quality standards, and to develop TMDLs for these waters. The States must also identify the pollutants preventing the attainment of water quality standards. Section 303(d) also gives EPA the authority to review and approve or disapprove the lists of waters prepared by a State.

Section 305(b) of the CWA requires each State to submit to EPA, biennially, "a description of the water quality of all navigable waters in such State." As part of section 305(b), States already list specific waterbodies that do not meet State water quality standards and the causes and sources of impairment. EPA and most of the State commenters agree that it makes sense to consolidate the sections 305(b) and 303(d) reporting processes. Moreover, EPA has authority under section 501(a) to interpret the statutory phrase "from time to time" to require biennial submission of section 303(d) lists.

In response to several commenters that argued that the section 305(b) report was not an appropriate vehicle for reporting section 303(d) waters and pollutants and that the proposed documentation requirements were also inappropriate as applied to the section 305(b) report, today's amendments allow States to submit the list required under section 303(d) separately from the section 305(b) report. EPA encourages the States to use the section 305(b) format and especially the Waterbody System in order to consolidate their reporting requirements.

Today's action drops the proposed amendment to § 130.8 which would have required the section 303(d) list to be submitted in the section 305(b) report. Today's amendments to § 130.10(b)(2) require submission of the list of section 303(d) waters, pollutants, priority ranking, and targeted waterbodies once every two years.

In addition, today's action specifies that EPA's approval of the list is dependent on whether a State has met the requirements specified in the regulation under § 130.7(b). This section describes how a State identifies and targets by priority ranking its water quality-limited waters that still require TMDLs, the requirements that States use, at a minimum, all existing and readily available water quality-related data and information and that States provide documentation to support their determinations. EPA may, of course, approve any component of a State submission that is deemed adequate, even if some components are lacking or are deemed inadequate.

b. *Amendments to § 130.8.* Today's amendments add paragraph (b)(5) to § 130.8 to require that lake water quality assessments be submitted biennially as part of each State's section 305(b) report. No changes have been made to the proposal. Section 314(a)(2) of the CWA requires that each State submit biennially to EPA an assessment of the water quality of all publicly owned lakes.

The specific elements of the required assessment are outlined in section 314(a)(2) and include a list and description of those publicly owned lakes for which uses are know to be impaired, a description of the status and trends of the water quality of each publicly owned lake, the nature and extent of pollution loadings from point and nonpoint sources and the extent to which the use of each lake is impaired as a result of such pollution. The assessment must also include a

description of the methods and procedures needed to control sources of pollution, restore the lake water quality, mitigate the harmful effects of high acidity, and remove toxic metals and other toxic substances mobilized by high acidity.

In order to receive grant assistance from EPA's Clean Lakes Program, States have been reporting their lake water quality assessments for publicly owned lakes in their water quality (section 305(b)) reports since 1988.

3. Summary of Public Notice

EPA opened two public comment periods for the proposed amendments to 40 CFR Part 130 that are related to section 303(d). The first comment period was offered in conjunction with the proposed section 304(l) regulation on January 12, 1989 (54 FR 1300). Comments received during this period indicated that there was confusion between the section 304(l) lists and section 303(d) lists. EPA reopened the comment period on July 24, 1989 in order to provide an opportunity to clarify EPA's intentions and receive additional comments on the section 303(d) requirements. When the comment period closed in September 1989, EPA had received a total of 185 comments related to section 303(d) from 58 commenters.

In the July 24, 1989 (54 FR 30765) notice to reopen the comment period on the proposed amendments implementing section 303(d), EPA specifically solicited comments on the implications of adding new emphasis to the section 303(d) program. Several questions were posed by EPA to make a more complete evaluation of how the new section 303(d) requirements might affect State and EPA programs.

Some of the issues raised by these questions related to the specific requirements that are promulgated with today's actions: the interpretation of narrative criteria, the adequacy and specificity of the documentation requirements, the timing for new requirements, and the reporting format. The major comments relating to these questions and EPA's response can be found within this preamble and in a response to comments document in the administrative record to this rulemaking.

Several questions posed did not relate specifically to today's action but were valuable in assisting EPA in developing a document entitled "Guidance for Water Quality-based Decisions: The TMDL Process" (EPA 440/4-91-001). The questions posed that relate to the development of the "Guidance for Water Quality-based Decisions: The TMDL Process" include: how should States develop a priority ranking for TMDL action; how would improved identification and reporting of water quality-limited segments affect the permitting process and existing nonpoint source control programs; should States consider nonpoint source contributions in the development of TMDLs; should EPA require public participation in the development of lists of water quality-limited segments. These topics are covered in detail in the guidance document and will assist States in meeting the requirements of today's regulations.

Many commenters expressed that the identification and prioritization of problem waters are necessary parts of shifting to a more integrated approach for addressing water quality problems on a watershed basis. Some of these commenters, however, added that administrative burdens detract from the States' ability to address problems and, therefore, should be kept to a minimum. EPA agrees, and these final amendments minimize administrative workloads by consolidating several reporting processes and allowing use of automated data systems.

States that consolidate reporting under sections 305(b), 303(d), and 314(a) will be able to focus on harmonizing the targeting and priority-setting aspects of various pollution control programs. This will promote integration between programs (e.g., point source and nonpoint source programs), agencies (e.g., pollution control and agricultural agencies), and eventually different levels of government to address problems on a comprehensive watershed basis.

The section 303(d) process allows EPA and the States to focus on problem watersheds in priority order. It also provides a process to find the most cost-effective solution to water quality problems in a watershed by allowing trade-offs among sources. Since TMDLs are the sum of allowable loadings of a pollutant from all point and nonpoint sources in a watershed (plus a margin of safety), States have the flexibility to consider the relative costs of point and nonpoint source controls when preparing TMDLs, along with such other factors as reliability, relative effectiveness, and degree of assurance that nonpoint source controls will actually be implemented and maintained. EPA also encourages point/nonpoint source trading and other market-based approaches to water quality improvement. Through trading, regulated point sources may be allowed to avoid upgrades of treatment systems to meet water quality objectives if they arrange for and finance equivalent (or greater) reductions in nonpoint source discharges within their watershed or waterbody. EPA and the States will increasingly use the section 303(d) process to establish priorities, promote integration, and develop necessary loadings reductions that are cost effective and watershed based.

G. Technical Corrections

EPA is today making non-substantive clarifying corrections to its regulations in part 130 to amend repeated references to "WLAs/LAs and TMDLs" to read "TMDLs." EPA had clearly stated in its definition of WLAs, LAs and TMDLs, and in the preamble to the 1985 final rule establishing part 130, that WLAs and LAs are part of a TMDL. See 50 FR 1775. Accordingly, the references to WLAs and LAs in these passages are not necessary. Since these changes are not substantive, and serve only to clarify existing requirements, EPA finds that notice and comment proceedings regarding these changes are unnecessary. Furthermore, the changes are in the nature of interpretive amendments to EPA rules, which are exempt from notice and comment requirements.

As part of the rules promulgated on June 2, 1989, EPA provided alternatives that the permitting authority may use to establish effluent limitations to meet narrative water quality criteria in 40 CFR 122.44(d)(1)(vi). Two of the options, §§122.44(d)(1)(vi)(A) and 122.44(d)(1)(vi)(B), involve use of EPA's water quality criteria guidance documents which summarize the scientific knowledge on the effects of pollutants and which contain recommendations regarding levels of pollutants consistent with protection of water quality. These criteria documents are developed as guidance pursuant to section 304(a) of the CWA. However, § 122.44(d)(1)(vi)(B) incorrectly indicates that the criteria are published pursuant to section 307(a) of the CWA. EPA is correcting that error in this rule.

IV. Regulatory Analysis

A. Executive Order 12291

Under section 3(b) of Executive Order 12291 the agency must judge whether a regulation is major and thus subject to the requirements of a Regulatory Impact Analysis. The regulation published today is not major because the rule will not result in an effect on the economy of $100 million or more, will not result in increased costs or prices, will not have significant adverse effects on competition, employment, investment, productivity, and innovation, nor will it significantly disrupt domestic or export

markets. Therefore, a Regulatory Impact Analysis has not been developed for this rule.

B. Paperwork Reduction Act

The information collection requirements related to section 303(d) of the CWA contained in this rule were previously approved by the Office of Management and Budget (OMB) under the Paperwork Reduction Act of 1980, 44 U.S.C. 3501 et seq. and assigned OMB Control Number 2040-0071. An addendum to the Information Collection Request to clarify the portion of burden related to 303(d) was made available for public review on February 7, 1992 and approved by OMB on May 14, 1992. OMB has reviewed and approved the information collection requirements related to section 304(l) of the CWA contained in this rule and assigned it OMB control number 2040-0152. The information collection requirements related to section 314 of the CWA contained in this rule were previously approved by OMB under the Paperwork Reduction Act of 1980, 44 U.S.C. 3501 et seq. and assigned OMB Control Number 2030-0020.

Public reporting burden for the collection of information pursuant to section 303(d) of the CWA is estimated to average 395 hours per State, including time for reviewing instructions, searching existing data sources, gathering and maintaining the data needed, and completing and reviewing the collection of information. The burden hours associated with the collection of information pursuant to section 303(d) is part of the burden for collection of information pursuant to section 305(b) of the CWA (which is estimated to average 4,639 hours per State). Public reporting burden for the collection of information pursuant to section 304(l) of the CWA is estimated to average 489 hours per State, including time for reviewing instructions, searching existing data sources, gathering and maintaining the data needed, and completing and reviewing the collection of information.

C. Regulatory Flexibility Act

Under the Regulatory Flexibility Act of 1980 (5 U.S.C. 601 et seq.), Federal agencies must analyze the impact of regulations on small entities (small businesses, small government jurisdictions and small organizations). However, this analysis is not required if the agency's administrator certifies that the rule will not have a significant economic effect on a substantial number of small entities. EPA has concluded that this rule will not have a significant economic effect on small entities because today's rulemaking imposes no new requirements for the regulated community. Today's regulations merely clarify procedures for implementing section 303(d) of the CWA and respond to the court decision on section 304(l) regulations.

List of Subjects

40 CFR Part 122

State program requirements, Water pollution control.

40 CFR Part 123

State program requirements, Water pollution control.

40 CFR Part 130

Water pollution control.

Dated: July 10, 1992.

William K. Reilly,

Administrator.

For the reasons set out in the preamble title 40 of the Code of Federal Regulations is amended as follows.

PART 122—EPA ADMINISTERED PERMIT PROGRAMS: THE NATIONAL POLLUTANT DISCHARGE ELIMINATION SYSTEM

1. The authority citation for part 122 continues to read as follows:

Authority: Clean Water Act, 33 U.S.C. 1251 *et seq.*

2. Section 122.44 is amended by revising paragraph (d)(1)(vi)(B) to read as follows:

§ 122.44 Establishing limitations, standards, and other permit conditions (applicable to State NPDES programs, see § 123.25).

* * * * *

(d) * * *

(1) * * *

(vi) * * *

(B) Establish effluent limits on a case-by-case basis, using EPA's water quality criteria, published under section 304(a) of the CWA, supplemented where necessary by other relevant information; or

* * * * *

PART 123—STATE PROGRAM REQUIREMENTS

1. The authority citation for part 123 continues to read as follows:

Authority: Clean Water Act, 33 U.S.C. 1251 *et seq.*

2. Section 123.46 is amended by revising paragraph (a) to read as follows:

§ 123.46 Individual control strategies.

(a) Not later than February 4, 1989, each State shall submit to the Regional Administrator for review, approval, and implementation an individual control strategy for each point source identified by the State pursuant to section 304(l)(1)(C) of the Act which discharges to a water identified by the State pursuant to section 304(l)(1)(B) which will produce a reduction in the discharge of toxic pollutants from the point sources identified under section 304(l)(1)(C) through the establishment of effluent limitations under section 402 of the CWA and water quality standards under section 303(c)(2)(B) of the CWA, which reduction is sufficient, in combination with existing controls on point and nonpoint sources of pollution, to achieve the applicable water quality standard as soon as possible, but not later than three years after the date of establishment of such strategy.

* * * * *

PART 130—WATER QUALITY PLANNING AND MANAGEMENT

1. The authority citation for part 130 continues to read as follows:

Authority: 33 U.S.C. 1251 *et seq.*

2. Section 130.7 is amended by revising paragraph (b); removing the words "WLAs/LAs and" in paragraphs (c)(1) (three places), (c)(1)(ii), (c)(2), (d) (three places), and (e); revising the first sentence of (d)(1) and adding three sentences immediately following the revised sentence; designating the second paragraph under (d)(1) as (d)(2); and adding a new sentence immediately following the first sentence of the newly designated (d)(2) to read as follows:

§ 130.7 Total maximum daily loads (TMDL) and individual water quality-based effluent limitations.

* * * * *

(b) Identification and priority setting for water quality-limited segments still requiring TMDLs.

(1) Each State shall identify those water quality-limited segments still requiring TMDLs within its boundaries for which:

(i) Technology-based effluent limitations required by sections 301(b), 306, 307, or other sections of the Act;

(ii) More stringent effluent limitations (including prohibitions) required by either State or local authority preserved by section 510 of the Act, or Federal authority (law, regulation, or treaty); and

(iii) Other pollution control requirements (e.g., best management practices) required by local, State, or

Federal authority are not stringent enough to implement any water quality standards (WQS) applicable to such waters.

(2) Each State shall also identify on the same list developed under paragraph (b)(1) of this section those water quality-limited segments still requiring TMDLs or parts thereof within its boundaries for which controls on thermal discharges under section 301 or State or local requirements are not stringent enough to assure protection and propagation of a balanced indigenous population of shellfish, fish and wildlife.

(3) For the purposes of listing waters under § 130.7(b), the term "water quality standard applicable to such waters" and "applicable water quality standards" refer to those water quality standards established under section 303 of the Act, including numeric criteria, narrative criteria, waterbody uses, and antidegradation requirements.

(4) The list required under §§ 130.7(b)(1) and 130.7(b)(2) of this section shall include a priority ranking for all listed water quality-limited segments still requiring TMDLs, taking into account the severity of the pollution and the uses to be made of such waters and shall identify the pollutants causing or expected to cause violations of the applicable water quality standards. The priority ranking shall specifically include the identification of waters targeted for TMDL development in the next two years.

(5) Each State shall assemble and evaluate all existing and readily available water quality-related data and information to develop the list required by §§ 130.7(b)(1) and 130.7(b)(2). At a minimum "all existing and readily available water quality-related data and information" includes but is not limited to all of the existing and readily available data and information about the following categories of waters:

(i) Waters identified by the State in its most recent section 305(b) report as "partially meeting" or "not meeting" designated uses or as "threatened";

(ii) Waters for which dilution calculations or predictive models indicate nonattainment of applicable water quality standards;

(iii) Waters for which water quality problems have been reported by local, state, or federal agencies; members of the public; or academic institutions. These organizations and groups should be actively solicited for research they may be conducting or reporting. For example, university researchers, the United States Department of Agriculture, the National Oceanic and Atmospheric Administration, the United States Geological Survey, and the United States Fish and Wildlife Service are good sources of field data; and

(iv) Waters identified by the State as impaired or threatened in a nonpoint assessment submitted to EPA under section 319 of the CWA or in any updates of the assessment.

(6) Each State shall provide documentation to the Regional Administrator to support the State's determination to list or not to list its waters as required by §§ 130.7(b)(1) and 130.7(b)(2). This documentation shall be submitted to the Regional Administrator together with the list required by §§ 130.7(b)(1) and 130.7(b)(2) and shall include at a minimum:

(i) A description of the methodology used to develop the list; and

(ii) A description of the data and information used to identify waters, including a description of the data and information used by the State as required by § 130.7(b)(5); and

(iii) A rationale for any decision to not use any existing and readily available data and information for any one of the categories of waters as described in § 130.7(b)(5); and

(iv) Any other reasonable information requested by the Regional Administrator. Upon request by the Regional Administrator, each State must demonstrate good cause for not including a water or waters on the list. Good cause includes, but is not limited to, more recent or accurate data; more sophisticated water quality modeling; flaws in the original analysis that led to the water being listed in the categories in § 130.7(b)(5); or changes in conditions, e.g., new control equipment, or elimination of discharges.

* * * * *

(d) Submission and EPA approval.

(1) Each State shall submit biennially to the Regional Administrator beginning in 1992 the list of waters, pollutants causing impairment, and the priority ranking including waters targeted for TMDL development within the next two years as required under paragraph (b) of this section. For the 1992 biennial submission, these lists are due no later than October 22, 1992. Thereafter, each State shall submit to EPA lists required under paragraph (b) of this section on April 1 of every even-numbered year. The list of waters may be submitted as part of the State's biennial water quality report required by § 130.8 of this part and section 305(b) of the CWA or submitted under separate cover. * * *

(2) * * * The Regional Administrator shall approve a list developed under § 130.7(b) that is submitted after the effective date of this rule only if it meets the requirements of § 130.7(b). * * *

* * * * *

3. Section 130.8 is amended by adding paragraph (b)(5) to read as follows:

§ 130.8 Water quality report.

* * * * *

(b) * * *

(5) An assessment of the water quality of all publicly owned lakes, including the status and trends of such water quality as specified in section 314(a)(1) of the Clean Water Act.

* * * * *

4. Section 130.10 is amended by revising paragraphs (b)(2) and (d)(3) to read as follows:

§ 130.10 State submittals to EPA.

* * * * *

(b) * * *

(2) Identification of water quality-limited waters still requiring TMDLs (section 303(d)), pollutants, and the priority ranking including waters targeted for TMDL development within the next two years as required under § 130.7(b) in accordance with the schedule set for in § 130.7(d)(1). (Approved by the Office of Management and Budget under control number 2040-0071.)

* * * * *

(d) * * *

(3) For each segment of navigable waters included on such lists, a determination of the specific point source discharging any such toxic pollutant which is believed to be preventing or impairing such water quality and the amount of each such toxic pollutant discharged by each such source.

(Approved by the Office of Management and Budget under control number 2040-0152)

* * * * *

[FR Doc. 92-17017 Filed 7-23-92; 8:45 am]
BILLING CODE 6560-50-M

ENVIRONMENTAL PROTECTION AGENCY

40 CFR Part 123

[FRL-3979-7]

National Pollutant Discharge Elimination System; Surface Water Toxics Control Program

AGENCY: Environmental Protection Agency.

ACTION: Proposed rule.

SUMMARY: Today's action proposes a response to a recent decision of the U.S. Court of Appeals Ninth Circuit in *NRDC v. EPA*, 915 F.2d 1314 (9th Cir. 1990) interpreting section 304(l) of the Clean Water Act (CWA). The Court's decision requires states to identify all facilities discharging toxic pollutants believed to be preventing or impairing water quality of waters on any of the State lists of impaired waters previously identified under section 304(1) and to identify the pollutants discharged. The Ninth Circuit decision also requires EPA to reconsider whether all facilities newly identified under 304(l) are required to have individual control strategies (ICS). The first action is completed elsewhere in the **Federal Register** today as part of final amendments to EPA regulations. The second action is initiated today through this proposal.

Today's action proposes two options. The first option is to continue to require ICSs only for point sources originally subject to such a requirement under EPA's earlier interpretation of section 304(l). The second option is to provide the State the discretion to determine whether, on a case-by-case basis, newly listed facilities will be required to have ICSs. In proposing these options, EPA also considered a third option—a requirement for ICSs for all newly listed point sources. Today's proposal discusses and solicits public comment on all three options. Section III below discusses the three options: no additional ICSs; some new ICSs at the discretion of the Director; and, ICSs for all newly listed point sources. After evaluating public comments and the revised State C lists, EPA may finalize the option requiring no new ICSs or the option authorizing some additional ICSs without seeking further public comment. Due to the lack of information to support the third option described under section III below—ICSs for all newly listed point sources, EPA does not expect to finalize that option without seeking further public comments.

DATES: EPA will accept comments from the public on this proposal until September 8, 1992.

ADDRESSES: Submit comments to Robert K. Wood, Water Quality and Industrial Permits Branch, Office of Wastewater Enforcement and Compliance, (EN-336), U.S. Environmental Protection Agency, 401 M Street, SW., Washington, DC 20460. The public record for this proposal is available at the EPA library, M2904, U.S. Environmental Protection Agency, 401 M Street, SW., Washington, DC 20460.

FOR FURTHER INFORMATION CONTACT: Robert K. Wood, Water Quality and Industrial Permits Branch, Office of Wastewater Enforcement and Compliance, (EN-336), U.S. Environmental Protection Agency, 401 M Street, SW., Washington, DC 20460, (202) 260-1955.

SUPPLEMENTARY INFORMATION:

Preamble Outline

I. Authority
II. Background
A. Clean Water Act Section 304(l)
B. Definition of Individual Control Strategy (ICS)
C. The Ninth Circuit Decision and Today's Final Amendments
D. Implementation of Water Quality-based Permits and ICSs
1. Water Quality-based Permit Requirements—Background
2. The Listing Process Conducted from 1988-1990
3. Information about Supplemented State C Lists
III. Options
A. Statutory Background
B. No Additional ICSs
C. Some New ICSs at the Discretion of the Director
D. ICSs for All Newly Listed Point Sources
IV. Today's Proposal
V. Regulatory Analysis
A. Executive Order 12291
B. Paperwork Reduction Act
C. Regulatory Flexibility Act

I. Authority

These regulations are issued under the authority of the Clean Water Act, 33 U.S.C. 1251 *et seq.*

II. Background

A. Clean Water Act Section 304(l)

In enacting the Water Quality Act of 1987 (WQA) which amended the CWA, Public Law No. 100-4, 101 Stat. 7, Congress placed greater emphasis on attaining State water quality standards. In particular, section 308 of the WQA amendments added several provisions to focus attention on attaining water quality standards for toxic pollutants. The first component was the establishment of the section 304(l) program. The purpose of section 304(l) is to identify and to control "toxic hot spots." 133 Cong. Rec. 1287 (Jan. 14, 1987) (stmt. of Sen. Moynihan).

In order to identify these "toxic hot spots," section 304(l) required each State, within two years after February 4, 1987, to submit to EPA three lists of waters. The first list required an inventory of those waters which are not reasonably expected to attain or maintain the new water quality standards developed under section 303(c)(2)(B) for toxic pollutants. (See section 304(l)(1)(A)(i).) The second list encompasses all waters that are not reasonably anticipated to attain the goals of the Act, *i.e.*, to "assure protection of public health, public water supplies, agricultural and industrial uses, and the protection and propagation of a balanced population of shellfish, fish and wildlife, and allow recreational activities in and on the water." Waters on the second list, while meeting State water quality standards, might not be fully achieving the goals of the Act. (See section 304(l)(1)(A)(ii).) These first two lists are known as the "A lists."

The third list includes those waters that the State "does not expect" to achieve applicable water quality standards, after application of technology-based controls, due to discharges from point sources of section 307(a) toxic pollutants. (See section 304(l)(1)(B).) For a water to be listed on the B list the failure to attain water quality standards had to be entirely or substantially due to the point source discharge of toxic pollutants. This list is commonly referred to as the "B list."

The statute also required the States to submit a list of point sources discharging toxic pollutants "believed to be preventing or impairing" the attainment of applicable water quality. 33 U.S.C. 1314(l)(1)(C). This list is commonly referred to as the "C list."

On January 4, 1989, EPA promulgated a rule interpreting the C list to include only point sources discharging toxic pollutants into waters on the B list. 40 CFR 130.10 (54 FR 258). Under this rule, once the State identified such point sources, they were to prepare ICSs for them. On June 2, 1989, EPA promulgated final regulations implementing section 304(1) of the CWA (54 FR 23868). Under EPA's June 2, 1989 regulations, the linkage between the C list sources and the B list waters which was to result in ICSs for point sources discharging to B list waters, was unique to the B list. EPA's rules did not require identification of point sources discharging to waters listed on the A lists, nor did these rules

require development of ICSs for point sources discharging to A list waters.

Upon the State's submittal of the lists and ICSs, EPA was to approve or disapprove the State's submissions of the lists and ICSs by June 4, 1989. In the event of a State's failure to submit the lists or ICSs, or if EPA disapproved a list or ICS, EPA was to work in cooperation with the State in order to develop the lists and ICSs by June 1990.

B. Definition of Individual Control Strategy (ICS)

EPA's June 2, 1989, final regulations implementing section 304(1) of the CWA (54 FR 23868) established the criteria and procedures for State listing of waters and facilities under section 304(1) as well as the requirements for ICSs. In these regulations EPA defined the term "individual control strategy" as "* * * a final NPDES permit with supporting documentation showing that the effluent limits are consistent with an approved wasteload allocation, or other documentation which shows that applicable water quality standards will be met not later than three years after the individual control strategy is established. Where a State is unable to issue a final permit on or before February 4, 1989, an individual control strategy may be a draft permit with an attached schedule * * * indicating that the permit will be issued on or before February 4, 1990. * * *." 40 CFR 123.46(c).

C. The Ninth Circuit Decision and Today's Final Amendments

A portion of EPA's regulations implementing section 304(l) of the CWA was remanded in *NRDC* v. *EPA*, 915 F.2d 1314 (9th Cir. 1990). The Ninth Circuit invalidated EPA's interpretation of section 304(l)(1)(C) and required EPA to amend its regulations at 40 CFR 130.10(d)(3) to reflect the Court's interpretation that facilities discharging toxic pollutants into waters on the A lists (not just the B lists) should be included on the C lists. In response to the Ninth Circuit decision, elsewhere in today's Federal Register, EPA is amending § 130.10(d)(3) to require States to supplement their C lists to include point sources discharging toxic pollutants to waters on the A lists.

The Ninth Circuit also required EPA to reconsider its interpretation of section 304(l)(1)(D) found at 40 CFR 123.46(a) of EPA regulations. EPA's original interpretation of section 304(1)(1)(D) requires only facilities discharging to waters on the B lists (every facility on the original C list) must have ICSs. When the Ninth Circuit invalidated EPA's interpretation of section 304(1)(1)(C) and thereby required States to expand their C lists to include point sources discharging toxic pollutants to waters on the A lists, the Court also required EPA to reconsider whether all point sources on the expanded C lists shall be required to have ICSs.

In its decision, the Ninth Circuit explicitly left for EPA to consider whether to increase the number of facilities required to have ICSs. The Ninth Circuit's requirement that EPA reconsider its interpretation of which facilities must have ICSs is not a directive to interpret the statute in a certain way. On the contrary, the Court asked EPA to determine the best course of action, i.e., to determine whether all, some, or none of the facilities which will be added to States' C lists should be required to have ICSs. Therefore, today's preamble discusses in some detail three options that EPA has considered for reinterpreting the requirements at § 123.46(a). EPA's principal proposal is to leave the regulations at § 123.46(a) unchanged and thereby not require ICSs for any newly listed facilities. EPA is also proposing, and soliciting public comment on, two other options.

D. Implementation of Water Quality-based Permits and ICSs

1. Water Quality-based Permit Requirements—Background

This section provides background regarding some of the water quality requirements that apply to NPDES permits, and explains what distinguishes permits that contain ICSs for other permits. All NPDES permits must include water quality-based effluent limitations where necessary to protect State water quality standards. CWA section 301(b)(1)(C). EPA regulations at 40 CFR 122.44(d) define this requirement and clarify how the permitting authority shall determine when water quality-based effluent limitations are necessary. All NPDES permits being issued should now reflect the requirements of § 122.44(d). In general, § 122.44(d) requires effluent limitations for pollutants and pollutant parameters that "are or may be discharged at a level which will cause, have the reasonable potential to cause, or contribute to an excursion above any State water quality standard, including State narrative criteria for water quality." 40 CFR 122.44(d)(1)(i). The fundamental purpose of an ICS is to "achieve the applicable water quality standard" for toxic pollutants "as soon as possible" through limitations imposed in permits. 40 CFR 123.46(a). The end point of attainment of water quality standards is the same for ICSs as for other NPDES permits. Therefore, all NPDES permits that meet the water quality-based permitting requirements at § 122.44(d) will also ultimately meet the requirements of an ICS. Thus, EPA may approve the existing permit as the ICS if the effluent limitations for the pollutant(s) of concern in the existing permit already meet the requirements of section 304(l).

There are some distinct differences between NPDES permits that contain ICSs and NPDES permits that do not. First, the requirements for an approvable ICS are narrowly focused on achieving water quality standards for toxic pollutants. To be approved by EPA, an ICS is required only to contain limitations for CWA section 307(a) toxic pollutants where necessary to protect State water quality standards. In contrast, all NPDES permits are also required to contain necessary limitations for individual section 307(a) toxic pollutants, as well as on all other pollutants or pollutant parameters, including whole effluent toxicity, where necessary to protect State water quality standards. Limitations for non-307(a) pollutants, such as chlorine and ammonia, and limitations for whole effluent toxicity are additional controls designed to protect State numeric and narrative water quality criteria; these are not required before EPA may approve an ICS. Thus, the requirements for water quality-based NPDES permits are broader than the requirements that apply to the ICS portion of an NPDES permit. All permits that are issued in compliance with the CWA will ultimately be at least as protective of water quality standards as, and in some cases more protective of water quality standards than, ICSs issued pursuant to section 304(l).

Another difference pertains to the timing of issuance of and compliance with NPDES permits, as compared to ICS requirements in permits. NPDES permits expire and are reissued every five years. With a few, limited exceptions, NPDES permits are not modified within this five-year cycle. Conversely, ICSs are intended to be implemented on an accelerated basis, i.e., within the five-year permitting cycle. Furthermore, in some circumstances NPDES permits may allow a reasonable time, which can never exceed the five year permit term for compliance with water quality-based limitations, while ICSs must require compliance within three years from establishment of the ICS.[1]

[1] ICSs were established beginning in approximately February 1989 and should have been

Continued

Whether and to what extent there would be an actual difference in the ultimate compliance dates between the normal NPDES permitting process and a new round of ICSs is unclear. EPA does not have precise data regarding either how many additional permits need water quality-based permit limits or when such permits expire. EPA has made increasing efforts over the last few years to ensure that permits contain appropriate water quality-based limitations. On March 9, 1984 EPA published a national "Policy for the Development of Water Quality-based Permit Limitations for Toxic Pollutants" (49 FR 9016). This notice confirmed EPA's policy of requiring that NPDES permit limitations assure compliance with all State water quality criteria for toxics. In 1985, EPA Published the "Technical Support Document for Water Quality-based Toxics Control." EPA-440/4-85-032, September 1985. This guidance document provided specific technical procedures to translate State numeric and narrative water quality criteria for toxics into NPDES permit numerical effluent limitations. Following this policy and guidance, EPA and States began to issue more permits which included effluent limitations for toxics designed to meet State water quality criteria. EPA has continued to expand and emphasize the water quality-based permit program to assure that permits include all necessary limitations. In February 1987, EPA began implementing the far-reaching programs of the Water Quality Act of 1987. In response to one of the new programs created by the 1987 Amendments, EPA promulgated final regulations on June 2, 1989 which strengthened EPA's Surface Water Toxics Control Program under NPDES (54 FR 23868). In March of 1991, after over five years of experience in implementing the surface water toxics control program, EPA published the revised "Technical Support Document for Water Quality-based Toxics Control." EPA/505/2-90-001, PB91-127415, March 1991.

All NPDES permits should have been renewed since EPA issued the 1984 National Policy, and, by 1994, all permits issued before the 1989 regulations should have been renewed. Because most permits contain compliance schedules of three years or fewer, compliance would likely be required no later than 1997 for permits issued as late as 1994. If EPA requires new ICSs, the ICSs will be developed as soon as 1992, depending on when today's proposed regulations become final. ICSs issued in 1992 or 1993 would require compliance as soon as possible, but no later than 1995 or 1996. EPA does not have information regarding how many additional ICSs might be developed under the various options described in this proposal—thus EPA cannot make a dependable estimate of how long development and establishment of the additional ICSs would take. Given the above analysis, there may not be a significant time difference between requiring new ICSs on the one hand and relying on the normal permitting process on the other.

A third difference between NPDES permits and ICS relates to EPA's ability to take over a State's authority to issue a permit. Under current regulations, EPA cannot assume a State's authority to issue the permit on the basis of the State's failure to issue the permit. However, where an ICS is required, EPA may take over a State's authority to issue the permit based on the State's failure to implement the ICS requirements consistent with the requirements of section 304(l). 40 CFR 123.46(f).

2. The Listing Process Conducted From 1988-1990

EPA considers the listing process that States and EPA have already completed under section 304(l) to be credible. Under section 304(l), the States were required to submit to EPA, three lists of waters and a list of facilities for EPA review and approval. EPA was required to make approval or disapproval decisions on the lists. The listing process was based on all available information. EPA and the States spent considerable time and effort to cast a broad net in the listing process to ensure that all waters for which there was sufficient supporting information were listed. In addition there was an opportunity for the public to comment on every State list (the comment process was held either by the State or by EPA, or in some cases by both). Because of the extensive process the States and EPA went through to develop the lists of waters and facilities, EPA has confidence in the quality of the lists.

In preparation for developing the 304(l) lists required by February 4, 1989, EPA advised the States that where a State had information showing that the fishable swimmable goals of the CWA were not being met in a water, but lacked information showing that such impairment was entirely or substantially due to the point source discharge of toxic pollutants, the State should list that water on the A list. The identity of point sources discharging to the water was not required for such waters in 1989. Similarly, EPA reviewed each State's lists to ensure that, where a State had information showing that a water was not meeting water quality standards entirely or substantially due to point source discharges of toxic pollutants, the water was listed on the B list, the responsible point sources were identified, and ICSs were prepared for them.

EPA and the States evaluated all available data, including both water quality related data and discharge data in determining whether an ICS would be required. The public had an opportunity to participate in the listing decisions in each State. EPA and States made every effort to list all point sources preventing or impairing the attainment of applicable water quality standards for toxic pollutants. If a particular point source was not included on a State's final C list, EPA has implicitly found through approval of the lists that an ICS was not needed. The bases for this finding were that the data do not show that the water quality standard is not expected to be attained for toxic pollutants, or that the data do not show that attainment (or substantial progress toward attainment) can be achieved from further controlling point sources of toxic pollutants. Requiring ICSs for such point sources will require permitting authorities to divert fixed resources to immediately evaluate the need for such point source controls. If the extensive listing process already conducted is credible, then this use of resources would be unwise and unnecessary in meeting the statutory goals and requirements.

3. Information About Supplemented State C Lists

The Ninth Circuit decision requires that, in addition to the facilities that the States have already identified pursuant to section 304(l)(1)(C), a point source must be listed if, as stated in 40 CFR 130.10(d)(3), it is discharging a toxic pollutant "believed to be preventing or impairing" water quality for each segment of water on all lists (not just the B list). Under EPA's original interpretation of section 304(l), State facilities lists were tied directly to waters not meeting applicable water quality standards, due entirely or substantially to the point source discharge of toxic pollutants (the B list). The Ninth Circuit has broadened this link between listed waters and facilities. States must now list facilities discharging section 307(a) toxic pollutants to waters where some uses

established by June, 1990 (although there were ICSs that were not established by then).

are impaired due to any type of source (including nonpoint sources) of such toxic pollutants whether the water quality standard will or will not be achieved.

EPA does not at this time have information from the States about the number of point sources that will be added to State C lists as a result of the Ninth Circuit decision and EPA's amendment to § 130.10(d)(3) implementing that decision. Nor does EPA have information regarding whether those discharges will be to waters where the water quality standards are being achieved or where the point source contribution is minimal.[2] EPA does not anticipate obtaining such information until the States submit it to EPA in 1992. Thus, EPA does not know what the quantity or importance of the newly added point sources will be.

This uncertainty raises the question of whether there will be sufficient environmental benefit from requiring ICSs for newly listed point sources given that the next permits issued to such point sources are required to be as protective as ICSs, and that ICS development can be significantly more resource intensive than, and thereby delay, other permit issuance under the normal five-year cycle. EPA's experience from the first round of ICS issuance was that a large permit workload was created. There were two principal reasons. First, the normal five-year cycle was interrupted and unexpired permits were reopened that would have otherwise not been reopened until the permit expired. Second, a larger number of permits had to be issued in a short period of time. This caused available resources to be directed toward addressing the peak workload and disrupted other State and regional permitting activities. Further, ICSs and their compliance requirements have been challenged in evidentiary hearings much more frequently than other NPDES permits. EPA believes that dischargers have challenged their permits containing ICS conditions more frequently than the norm in part because, as a result of ICS requirements, they are seeing water quality-based limits in their permits for the first time. EPA believes that many of the same dischargers are likely to again challenge their permits when they come up for reissuance to include additional water quality-based limits (e.g., limits for whole effluent toxicity or WET). Thus, a likely result of requiring additional ICSs is an increase in evidentiary hearing requests. This too is a significant drain on limited State and EPA resources.

This diversion of resources has resulted in an increased number of expired permits that have not been reissued ("permit backlog"). EPA annually tracks the number of expired permits which EPA Regions and authorized States have been unable to reissue. The number of backlogged permits in the States has increased from 12% in 1988 to 22% in 1990. This period of time corresponds to the period during which the States were developing ICSs. The result of this increased backlog is that some permits needing new effluent limitations to protect water quality are not being issued. EPA's information, based on a sample of two regions, shows that approximately 35% of facilities that discharge wastewater exhibit WET at levels which have the reasonable potential to cause an excursion above a water quality criterion. EPA does not believe that 307(a) toxic pollutants are the sole cause of WET. In addition, section 304(l) of the CWA does not require ICSs to specifically limit WET. Therefore, diversion of resources away from normal permit reissuance, during which a limit for other than a 307(a) pollutant could be imposed, will allow some facilities to continue to impair water quality.

By adhering to the five-year permitting cycle instead of requiring new ICSs, EPA believes that point source controls protective of water quality standards will be established where necessary in the near-term, and that EPA will at the same time avoid unnecessarily diverting fixed EPA and State resources away from activities that may provide needed environmental protection. Based on these factors, EPA believes that it may be more environmentally beneficial to adhere to the normal five-year permitting cycle when establishing water quality-based effluent limitations to protect applicable water quality standards.

III. Options

The Ninth Circuit required EPA to reconsider its interpretation of CWA section 304(l)(1)(D). EPA has considered three principal options in deciding whether to require additional ICSs.

A. Statutory Background

EPA's starting point for today's proposal is the language and purpose of the statute. If the statute provides an unambiguous requirement regarding which waters need ICSs, EPA is bound to implement that requirement. If, on the other hand, the statute is ambiguous, EPA may choose a rational interpretation of the statute in view of its purpose. Section 304(l)(1)(D) provides for "each such segment," an individual control strategy which the State determines will produce a reduction in the discharge of toxic pollutants from point sources identified by the State under this paragraph through the establishment of effluent limitations under section 402 of this Act and water quality standards under section 303(c)(2)(B) of this Act, which reduction is sufficient, in combination with existing controls on point and nonpoint sources of pollution, to achieve the applicable water quality standard as soon as possible, but not later than 3 years after the date of the establishment of such strategy. When this provision is read as a whole it is ambiguous. The reference to "each such segment" could mean one of several things. First, "each such segment" could refer broadly to all segments identified in section 304(l), meaning that each and every segment identified on any of the lists must have an ICS. Second, "each such segment" could refer specifically to the segments affected by paragraph C, implying that each segment identified as receiving discharges of section 307(a) pollutants from point sources must have an ICS. Third, the provision could require ICSs for water segments for which an ICS will produce a reduction in the discharge of toxic pollutants sufficient to achieve the applicable water quality standard. Last it could mean that the States and/or EPA are to examine the listed segments of water to determine whether an ICS is needed to improve water quality. This last approach could be accomplished on a case-by-case basis, or if data are available, groups of water segments could be included in or excluded from the ICS requirement.

The legislative history does not illuminate the precise meaning of this provision. Clearly, Congress intended the section 304(l) program to be narrowly focused on the "toxic hot spots" rather than to be broadly applied to all waters. See, for example, 133 Cong. Rec. S17-76, 24 (daily ed. Jan. 6, 1987), statement of Senator Moynihan. The only discussion in the Conference Report indicates that the C list would consist of dischargers to the B list

[2] The relative contribution of the point source is only relevant to the question of whether the development of new limitations should be a high priority, not whether there should be limitations at all. EPA regulations at 40 CFR 122.44(d) require NPDES limitations for all dischargers where necessary to protect applicable water quality standards. These regulations to not distinguish "minimal" contributions from contributions of a greater magnitude.

waters and ICSs would be prepared for each discharger on the C list. Because the essence of that discussion (*i.e.*, that the C list would consist of the dischargers to the B list) has already been rejected by the Ninth Circuit, EPA does not believe that the Conference Report alone is determinative. Similarly, section 304(l) did not codify either the House of Representatives or the Senate version of the provision. The House provision would have required ICSs for the B list waters, while the Senate provision would have required an ICS-type control mechanism for at least some of the waters on the A(i) list. Neither the House nor the Senate provision would have required special limitations for waters on a list equivalent to the A(ii) list.

As shown above, the language of the statute and the legislative history do not provide clear guidance for one distinct interpretation. Therefore, EPA will take into account the purposes of section 304(l) and the Clean Water Act generally to determine the scope of the ICS requirements.

B. No Additional ICSs

EPA is proposing under this option that new ICSs not be developed for the facilities added to the C list. EPA's reasoning is based on the conclusions that (1) the statute does not require new ICSs; and (2) the purposes of the statute, in particular the requirement that water quality standards be met, will be served without new ICSs.

By proposing this option EPA is adhering to its original view that ICSs should be required for those waters where the solution meshes with the problem. In particular the ICS solution of point source controls for toxic pollutants fits the problem of the waters on the B list. Those waters include all waters that are entirely or substantially contaminated by point source discharges of toxic pollutants. The B list includes a wide spectrum of waters, including some waters with significant nonpoint source pollution and some waters with significant degradation from other pollutants. What is common to all the B list waters is that point sources of toxic pollutants are a significant problem. Thus EPA is proposing that ICSs be required for all point sources on the C list which discharge to waters on the B list.

Even though no ICSs would be required for the point sources added to State C lists as a result of the Ninth Circuit decision, the next permit issued to the facility pursuant to EPA and State NPDES regulations, and specifically 40 CFR 122.44(d), must contain effluent limitations for each of the toxic pollutants for which the facility was identified pursuant to section 304(l)(1)(C), where necessary to meet applicable water quality standards. Therefore, the next permit issued to the facility must, by regulation, be at least as protective as an ICS would.

As described above, there are certain characteristics of an ICS that are lost under this option. First, the timing of issuance of a permit containing an ICS may be different than for a permit not containing an ICS. EPA does not believe that this time difference is substantial. As discussed later in section III.C. of today's proposal, new ICSs would likely not be incorporated into final NPDES permits until 1994 following promulgation of a final rule in 1992, State submittals of new draft ICSs in 1993, and completion of the EPA or State review and public comment period. In contrast, most NPDES permits effective on or before 1994 should already include effluent limitations necessary to achieve water quality standards in order to comply with the June 2, 1989, regulations at 40 CFR 122.44(d)(1). Most authorized States should have been issuing permits to comply with the requirements of 40 CFR 122.44(d)(1) by June 1990 because under 40 CFR 123.62(e) authorized States have up to one year to adopt regulations to reflect promulgation of new federal regulations. States may have up to two years if State law must be amended; however, EPA believes that most States did not need changes to State law to implement the requirements of 40 CFR 122.44(d)(1). Because NPDES permits cannot extend for more than five years, most of the NPDES permits needing water quality-based effluent limits for toxics will have been reissued by 1994. Furthermore, in most States, water quality standards or implementing regulations that expressly authorize compliance schedules allow up to three years as a reasonable compliance schedule; three years is also the maximum time allowed by section 304(l)(1)(D) for compliance with the requirements of an ICS. Therefore, the timeframe for compliance with the requirements of any new ICSs would not be significantly different from the compliance timeframe for final permits that would normally be issued under the five-year cycle of expiration and reissuance.

A second characteristic of an ICS that is lost under this option relates to EPA's authority to take over and issue State permits. Currently, EPA's authority to take over ICS issuance from the State (40 CFR 123.46(f)) does not apply to all NPDES permits—only ICSs. Therefore, under this option where no new ICSs would be required, EPA would forgo the opportunity to take over permit issuance from the State for new C list facilities where the State fails to act on those permits. EPA's authority to object to a State permit and assume authority to issue such a permit would be unchanged under this option.

There is a significant advantage to this option. It would take advantage of the significant work already completed separating out the waters that urgently need point source controls for toxic pollutants, instead of requiring the States and EPA to start over in that evaluation. Because EPA believes that most of the impaired waters for which facilities will be identified on the expanded C lists are dominated by nonpoint sources of toxics, or are already meeting water quality standards for toxics, this option is likely to provide a level of environmental protection similar to what would be achieved under other options. Thus, this option would allow permitting authorities to continue planned reissuance of expired permits that achieve State water quality standards—in many cases for higher priority waters where, for example, nonconventional pollutants are the problem.

This option would require no change to 40 CFR 123.46(a) as amended today by the final action described above. The regulations at § 123.46(a) would maintain their original meaning: ICSs are required for each point source identified pursuant to section 304(l)(1)(C) which discharges to a water identified pursuant to section 304(l)(1)(B).

EPA solicits comment on this proposed option, including under which circumstances this option would be more appropriate than other options described below, on whether this option should be adopted, and on the assumptions upon which this option is based. These assumptions include: that the section 304(l) listing process was credible; that section 304(l) implementation has identified the great majority of waters and facilities in need of ICSs to address point source-related "toxic hot spots;" that water quality-based permits issued in the normal permitting cycle will be at least as protective of water quality as ICSs; that some permits most in need of new water quality-based limitations for non-307(a) toxic pollutants will not be timely reissued as a result of an expanded 304(l) process; and that ICS development is highly resource intentive.

C. Some New ICSs at the Discretion of the State

EPA is proposing an alternative to the option described in III.B., above. Under this second option, each State would have the discretion to determine, on a case-by-case basis, whether ICSs should be established for newly listed facilities. The resulting State determinations would be reviewable by EPA and would be made available for public comment. An ICS would not be required for a listed facility where in the judgment of the State, after EPA review and opportunity for public notice and comment, an ICS is not warranted.

EPA realizes that the listing process under section 304(1)(1) (B) and (C) may not have identified all waters and facilities where additional ICSs would be warranted. EPA will rely, in part, on the information submitted by the States in their new C lists to make the final determination of whether to require more ICSs. If the new State C lists identify a significant number of sources on waters exceeding water quality standards for toxic pollutants, EPA will be more likely to select this second option and thereby require at least some new ICSs.

At present, EPA's preferred way of structuring such a requirement would be to require the State to evaluate all newly listed point sources and their receiving waters to determine if developing an ICS would be warranted. EPA is proposing at § 123.46(a)(i), under this option, a set of criteria that the States would use to decide whether to submit an ICS for a particular facility and on which the Regional Administrators would base their reviews of those decisions. The proposed criteria are fundamentally based on the section 304(l) requirement to establish ICSs that will reduce the point source discharge of toxic pollutants, and EPA's regulations at 40 CFR 122.44(d) which require that permits contain water quality-based effluent limitations wherever necessary to protect water quality standards. The basis for these determinations would include the following: whether applicable water quality standards for toxic pollutants for the listed receiving water are currently being met; whether the newly listed point source causes, has the reasonable potential to cause, or contributes to an exceedance of applicable water quality standards for toxic pollutants; and, whether a decrease in discharge from all listed point sources of the toxic pollutants of concern to the listed water would significantly improve water quality.

Under this option, EPA is proposing a process and deadlines for the following actions: State determinations of which facilities need ICSs; State submittal of new ICSs to EPA; EPA review of State ICSs; public review of draft permits containing new ICSs; and EPA public notice of its final approval/disapproval decisions. In proposing an administrative process, EPA is attempting to consolidate actions wherever possible and make the process of implementing this option clear and straightforward. Thus, where possible, EPA proposes relying on the normal permit issuance process for public review of ICSs. In proposing this administrative process, EPA's two main objectives are to establish ICSs quickly where they are necessary, and to ensure that ICS determinations are made accurately. EPA solicits public comment on whether the proposed administrative process will be efficient and accurate. In particular, EPA solicits comment on whether public review of ICS determinations is necessary.

The proposed process is as follows:

—Each State shall determine, based on the following criteria, which facilities on the section 304(l)(1)(C) list that discharge to waters not on the list required by section 304(l)(1)(B), should be required to have ICSs:

(a) Whether applicable water quality standards for toxic pollutants for the listed receiving water are currently being met;

(b) Whether the newly listed point source causes, has the reasonable potential to cause, or contributes to an exceedance of applicable water quality standards for toxic pollutants; and

(c) Whether a decrease in discharge from all listed point sources of the toxic pollutants of concern to the listed water would significantly improve water quality.

—Each State shall submit to EPA, by September 22, 1993, the ICSs for each facility the State has determined should be required to have an ICS. Where a State is authorized to administer the NPDES Program, that State should make draft permits that are ICSs available for public comment prior to submitting the ICSs to EPA.

September 22, 1993, is one year from the date EPA is recommending that States submit their revised lists of facilities under section 304(l)(1)(C). EPA believes that one year is necessary to allow the States sufficient time to develop well-documented ICSs. For the first set of ICSs submitted on or before February 4, 1989, the States had two years to identify which waters needed listing, to identify which facilities needed ICSs and then to develop the ICSs. In the action proposed under this option, the States will already have the waters identified but will need to decide which additional facilities need ICSs and then to develop ICSs. EPA believes that one year provides a reasonable time to complete these activities given that the number of new ICSs is presently undeterminable.

—Within four months of the State submittal of each ICS, the Regional Administrator shall: (a) Approve any ICS EPA believes is adequate if the State has provided public participation and if the Regional Administrator determines that additional public comment is not desirable, (b) propose to approve any ICS EPA believes is adequate and either the State has not provided adequate public participation or the Regional Administrator determines that additional public comment is desirable, (c) propose to disapprove any ICS EPA believes is inadequate, and (d) propose to disapprove any implicit determination not to submit an ICS for a facility if EPA believes, based on the criteria in paragraph (i), an ICS is needed. An ICS is adequate if it conforms to the definition of ICS at 40 CFR 123.46(c); contains limitations for the relevant toxic pollutant(s) as required in § 122.44(d) and it contains a date for compliance that is as soon as possible, but not later than three years from the date of establishment of the ICS. EPA shall make its proposed decisions regarding approval/disapproval of State ICSs available for public comment for a period of 60 days.

EPA believes that four months is a reasonable time for EPA to review the submitted ICSs and decide whether to approve or disapprove them. The four months is the same amount of time that Congress allowed for review of the ICSs which were submitted on or before February 4, 1989. EPA believes that the same amount of time is needed because EPA may be reviewing a large number if ICSs during any four months period, making it impractical to expect that review could be completed in a shorter time.

EPA also believes that a 60-day comment period is sufficient to provide for full public participation in the review of ICSs and EPA's proposed decisions regarding ICSs. In the first round of ICSs, the statute allowed for a 120-day public comment period for review of listing decisions on waters as well as review of ICSs. In the action proposed under this option, the public will already know which waters were listed based on the February 4, 1989, submittals and

will only need to review the ICSs and any proposed decisions regarding approval or disapproval of ICSs. ICSs are in content equal to NPDES permits. EPA normally allows for a 30-day comment period for public review of NPDES permits. Therefore, EPA believes that 60 days is sufficient for full public review of the new ICSs and proposed decisions regarding ICSs.

The proposed regulations under this option would not require EPA to take public comment on those ICSs that the Regional Administrator approves and determines that the State provided adequate public participation. EPA Regional Offices may choose to publicly notice such final decisions at the same time they request public comment on proposed approval/disapproval decisions.

Within four months after the close of the 60-day public comment period on EPA's proposed approval/disapproval of State ICSs, EPA shall consider all public comments received, make final approval/disapproval decisions including decisions on whether additional ICSs should be required. EPA shall publicly notice these final decisions. At any point where EPA publicly notices a disapproval of a State ICS, the Administrator in cooperation with such State, and after notice and opportunity for public comment, shall implement the requirements of section 304(l) in such State within one year following the date of the disapproval.

EPA believes that four months is a reasonable time for EPA to review any comments submitted by the public and make final approval/disapproval decisions. The four months is the same time EPA allowed for this activity for the first set of ICSs which were submitted on or before February 4, 1989. EPA believes that the same amount of time is needed because many of these decisions could be complex and of significant interest to the public. EPA believes that four months is the shortest feasible time to adequately evaluate comments on such decisions.

The Chief benefit of this option is that it would support the development of ICSs where they are necessary, i.e., where the State and EPA make the judgment that water quality improvement will result. At the same time this option would enable the States and EPA to forgo developing an ICS where the ICS would not require new controls or where the environmental benefit would, on balance, be insignificant.

This option would not require that ICSs be developed for all facilities added to State C lists; instead, ICSs would be limited to where water quality-based limitations for toxic pollutants are required under 40 CFR 122.44(d) and where the ICS is expected to result in improved water quality. Limiting the ICS requirement to only some dischargers is appropriate because ICSs are limited to controlling point sources of toxic pollutants and some of the waters concerned may not be impaired by either. This option contemplates that there may be some newly listed facilities whose discharges have the reasonable potential to cause or contribute to excursions of the applicable water quality standards even though the waters are not exceeding the water quality standards due entirely or substantially to the point source discharge of toxic pollutants.

Under this option, the State would have to judge whether the contribution of toxic pollutants from such a discharger is either significant or minimal. The question of whether the receiving water is impaired entirely or substantially due to the point source discharge of toxic pollutants, however, has already been answered. If the State and EPA did not list the water on the B list, then they have found that the principal cause of impairment of the water, based on available information, is not the point source discharge of toxic pollutants.

A significant drawback of this option is that States would have to undertake large numbers of evaluations that could be essentially redundant. In deciding whether ICSs are warranted, the States and EPA (in reviewing State decisions) might be essentially revisiting the determinations that were already made when the B lists were developed. This could be true even though the terminology controlling the decisions would be somewhat different—in reality available water quality information is not usually precise enough to make fine distinctions, and the State and EPA must rely in part on their accumulated expertise to make reasonable decisions. Thus, this option could impose a repetitive decision making burden without a corresponding environmental benefit.

EPA is also proposing an additional regulatory amendment under this option to amend the definition of Individual Control Strategy at 40 CFR 123.46(c). The existing regulatory definition of ICS is not clear on the conditions under which a draft permit can be an ICS. EPA intends to continue to approve draft permits as ICSs under this option and is, therefore, proposing to amend the definition of ICS to clarify that ICSs can be draft permits where the final permit will be issued within one year after the State submits the draft permit to EPA. This proposed amendment is needed to ensure that ICSs will be established as soon as possible while taking account of the length of time needed to develop complex permits.

EPA solicits comments on this option, including whether it should be finalized, what different criteria might be appropriate for determining when ICSs are required, what procedures are appropriate for implementing this option, and what deadlines should apply.

D. ICSs for All Newly Listed Point Sources

This option would require ICSs for all newly listed facilities. The obvious result of this option would be that accelerated review of the need for new water quality-based controls, in the form of ICSs, would be required for all point sources on the C list. In the discussions above, EPA has already identified at least two categories of waters for which ICSs would not accomplish the statutory goal of attaining water quality standards: waters that are already expected to achieve applicable standards and waters with minimal point source contributions. Yet, under this option, fixed EPA and State resources would be expended on establishing ICSs even in cases where the information shows that there will be little or no environmental benefit from an ICS. One result of this expenditure of resources, EPA has learned, may be that the permit backlog (permits that have expired and not yet been reissued) would increase. Furthermore, as noted above, EPA has very little information at this time about the number of facilities that States will add to their C lists as a result of the Ninth Circuit decision. If a small number of facilities is added, the resource implications in other parts of the water quality program of this option would be minimal. However, if a large number of facilities is added and if those facilities include a large proportion of facilities that are discharging minimal amounts of toxic pollutants, a significant expenditure could be required to develop ICSs without a concomitant environmental benefit. The essential point is that the listing process itself (listing of point sources discharging toxic pollutants to the A list waters) may not in many cases provide the information necessary to show that ICSs would result in improved water quality for a given facility; yet, under this option, an ICS would always be required for a listed facility, regardless of whether available information shows that an ICS would be environmentally beneficial. It is

questionable whether ICSs should automatically be required for newly listed facilities, particularly in light of the virtual absence of information concerning the likely contents of the new C lists.

This option would require an amendment to 40 CFR 123.46(a), as amended elsewhere in this **Federal Register**, to establish the requirement for new ICSs and the administrative process and schedule for developing, reviewing, and implementing the new ICSs. The administrative process under this option would be similar to the process proposed under the second option above except that ICSs would be submitted to EPA and approved or disapproved by EPA for each newly listed point source. Again, the Agency solicits comment on all aspects of this option and, specifically, on the advisability of finalizing this option and on what changes to existing procedural regulations would be necessary to implement this option.

IV. Today's Proposal

Today, EPA is proposing two options. First, EPA is proposing to not amend § 123.46(a). This proposal is described in detail as the first option in III.B., above. Under this option, the regulations at § 123.46(a) would maintain their original meaning as established on June 2, 1989: ICSs are required for each point source on the C list that discharges to a water on the B list. Even though no ICSs would be required for the point sources added to State C lists as a result of the Ninth Circuit decision, the next permit issued to the facility pursuant to EPA and State NPDES regulations and, specifically 40 CFR 122.44(d), must contain effluent limitations protective of applicable standards for all pollutants where necessary, including each of the toxic pollutants for which the facility was listed. Such permits would also need to meet all other requirements of 40 CFR 122.44(d). Therefore, the next permit issued to the facility would, by regulation, be at least as protective as an ICS would. Under this first option, no regulatory change to § 123.46(a) beyond that made by final rule, elsewhere in today's **Federal Register**, would be necessary. EPA is, therefore, not proposing any additional regulatory language under this option.

EPA is also proposing today an alternative option. This second option is described in detail under section III.C., above. Under this option the regulations at § 123.46(a) would be amended to provide the State the discretion to determine, on a case-by-case basis, whether ICSs are required for newly listed facilities. The State determinations would be subject to EPA and public review. An ICS would not be required for a listed facility where in the judgment of the State, and after EPA and public review, an ICS is not warranted. EPA is, today, proposing under the second option, a set of criteria on which the States would base their ICS determinations and on which EPA would base its reviews of State ICS determinations. The proposed regulation would be an addition to 40 CFR 123.46(a), as set out in the proposed regulations below. Today's proposed regulatory language at § 123.46(a) is for this second option only. No regulatory language is either necessary or proposed under the first option.

EPA believes at this time, that the first proposed option may be the best course of action. In proposing this option EPA is postulating that the original B lists identified the vast majority of waters for which ICSs would provide significant environmental benefit. The first option would avoid the resource-intensive and inherently redundant process of developing limits on toxic pollutants separate from other permit limits. EPA also believes that the benefits of the first option outweigh the possibility that some newly listed point sources that are in need of high-priority attention will not receive new water quality-based controls immediately, but rather will receive water quality-based effluent limitations at the time of the next permit issuance.

If after reviewing the revised State C lists and the public comments on today's proposal, EPA determines that the original B lists did not identify a substantial portion of waters for which ICSs would provide significant environmental benefit, EPA will be more likely to consider finalizing the second, or alternative option, described in III.C., above.

EPA is today soliciting comments from the public on all aspects of this proposal. EPA will carefully consider all public comments on this proposal before making a final decision. EPA also intends to evaluate the revised C lists in making its final determination of the best course of action. After evaluating public comments and the revised State C lists, EPA may finalize either of its proposed options without seeking further public input. Due to the lack of information to support the third option described under III.D. above, and EPA's belief that there will be some newly listed facilities for which an ICS will not improve water quality and therefore should not be required, EPA does not anticipate finalizing that option without seeking further public input. EPA is, therefore, not today proposing any regulatory language that would implement this third option.

V. Regulatory Analysis

A. Executive Order 12291

Under section 3(b) of Executive Order 12291 the Agency must judge whether a regulation is major and thus subject to the requirements of a Regulatory Impact Analysis. Today's proposal will not result in any additional regulatory requirements. Today's proposal, therefore, is not major; it will not result in an effect on the economy of $100 million or more; it will not result in increased costs or prices; it will not have significant adverse effects on competition, employment, investment, productivity, and innovation; and it will not significantly disrupt domestic or export markets. Therefore, the Agency has not prepared a Regulatory Impact Analysis under the Executive Order. EPA submitted this proposal to the Office of Management and Budget (OMB) for review as required by Executive Order 12291.

B. Paperwork Reduction Act

The Office of Management and Budget (OMB) has approved the information collection requirements contained in this proposed rule under the provisions of the Paperwork Reduction Act, 44 U.S.C. 3501 *et seq.* and has assigned OMB control numbers 2040–0057 2040–0068, and 2040–0086.

C. Regulatory Flexibility Act

Under the Regulatory Flexibility Act of 1980 (5U.S.C. 601 *et seq.*), Federal agencies must, when developing regulations, analyze their impact on small entities (small businesses, small government jurisdictions, and small organizations). This analysis is unnecessary, however, where the agency's administrator certifies that the rule will not have a significant economic effect on a substantial number of small entities. The Agency has concluded that today's proposal will not have a significant economic effect on a substantial number of small entities because today's action proposes no new requirements for the regulated community. Today's proposal merely affirms a final regulatory amendment also made today and described above and solicits public comment on this proposal as well as possible alternative courses of action.

List of Subjects in 40 CFR Part 123

State Program Requirements, water pollution control.

Dated: July 10, 1992.

William K. Reilly,

Administrator.

For the reasons set out in the preamble 40 CFR part 123 is proposed to be amended as follows.

PART 123—STATE PROGRAM REQUIREMENTS

1. The authority citation for part 123 continues to read as follows:

Authority: Clean Water Act, 33 U.S.C. 1251 *et seq.*

2. Section 123.46(a) is amended by adding paragraphs (a)(1), (a)(2), (a)(3) and (a)(4) (and by revising paragraph (c) to read as follows:

§ 123.46 Individual control strategies.

(a) * * *

(1) Each State shall determine, based on the following criteria, which facilities on the section 304(l)(1)(C) list that discharge to waters not on the list required by section 304(1)(1)(B), should be required to have ICSs;

(i) Whether applicable water quality standards for toxic pollutants for the listed receiving water are currently being met;

(ii) Whether the newly listed point source causes, has the reasonable potential to cause, or contributes to an exceedance of applicable water quality standards for toxic pollutants; and

(iii) Whether a decrease in discharge from all listed point sources of the toxic pollutants of concern to the listed water would significantly improve water quality.

(2) Each State shall submit to EPA, by September 22, 1993, the ICS for each facility the State has determined should be required to have an ICS. Where a State is authorized to administer the NPDEs Program, that State should make draft permits that are ICSs available for public comment prior to submitting the ICSs to EPA.

(3) Within four months of the State submittal of each ICS, the Regional Administrator shall: (i) Approve any ICS EPA believes is adequate if the State has provided adequate public participation and if the Regional Administrator determines that additional public comment is not desirable, (ii) propose to approve any ICS EPA believes is adequate, and either the State has not provided adequate public participation or the Regional Administrator determines that additional public comment is desirable, (iii) propose to disapprove any ICS EPA believes is inadequate, and (iv) propose to disapprove any implicit determination not to submit an ICS for a facility if EPA believes, based on the criteria in paragraph (a)(1) of this section an ICS is needed. An ICS is adequate if it conforms to the definition of ICS at 40 CFR 123.46(c); contains limitations for the relevant toxic pollutant(s) as required in § 122.44(d) and it contains a date for compliance that is as soon as possible, but not later than three years from the date of establishment of the ICS. EPA shall make its proposed decisions regarding approval/disapproval of State ICSs available for public comment for a period of 60 days.

(4) Within four months after the close of the 60-day public comment period on EPA's proposed approval/disapproval of State ICSs, EPA shall consider all public comments received, make final approval/disapproval decisions including decisions on whether additional ICSs should be required. EPA shall publicly notice these final decisions. At any point where EPA publicly notices a disapproval of a State ICS, the Administrator in cooperation with such State, and after notice and opportunity for public comment, shall implement the requirements of section 304(l) in such State within one year following the date of the disapproval.

* * * * *

(c) For the purposes of this section the term individual control strategy as set forth in section 304(1) of the CWA, means a final NPDES permit with supporting documentation showing that effluent limits are consistent with an approved wasteload allocation, or other documentation which shows that the applicable water quality standards will be met not later than three years after the individual control strategy is established. Where a State is unable to issue a final permit within one year after submitting to EPA its revised list of facilities pursuant to section 304(a)(1)(1)(C), an individual control strategy may be a draft permit with an attached schedule indicating that the permit will be issued within one year after the State submitted to EPA the draft permit as the ICS.

* * * * *

[FR Doc. 92-17020 Filed 7-23-92; 8:45 am]

BILLING CODE 6560-50-M

federal register

Friday
July 24, 1992

Part III

Department of Education

Special Projects and Demonstrations for Providing Vocational Rehabilitation Services to Individuals With Severe Handicaps; Hearing Research Center; Notices

DEPARTMENT OF EDUCATION

Special Projects and Demonstrations for Providing Vocational Rehabilitation Services to Individuals With Severe Handicaps; Hearing Research Center

AGENCY: Department of Education.

ACTION: Notice of final priority for fiscal year 1993.

SUMMARY: The Secretary announces a priority for fiscal year (FY) 1993 under the program of Special Projects and Demonstrations for Providing Vocational Rehabilitation Services to Individuals with Severe Handicaps. The priority is for a hearing research center that will conduct basic and applied research activities to assist in the rehabilitation of individuals with significant hearing loss.

EFFECTIVE DATE: This priority takes effect either 45 days after publication in the **Federal Register** or later if Congress takes certain adjournments. If you want to know the effective date of this priority, call or write the Department of Education contact person.

FOR FURTHER INFORMATION CONTACT: George N. Kosovich, U.S. Department of Education, 400 Maryland Avenue, SW., room 3221, Switzer Building, Washington, DC 20202-2736. Telephone: (202) 205-9698. Deaf and hearing impaired individuals may call (202) 205-8919 for TDD services.

SUPPLEMENTARY INFORMATION: Grants under the program of Special Projects and Demonstrations for Providing Vocational Rehabilitation Services to Individuals with Severe Handicaps are authorized by title III, section 311(a)(1) of the Rehabilitation Act of 1973, as amended. The purpose of this program is to authorize grants for special projects and demonstrations that hold promise of expanding or otherwise improving rehabilitation services to individuals with the most severe handicaps. The Department's 1993 appropriation for this program includes funds for the support of a hearing research center.

This program, as well as the final priority, supports AMERICA 2000, the President's strategy for moving the Nation toward the National Education Goals, by supporting research activities to assist in the education and rehabilitation of persons severely handicapped by hearing loss. National Education Goal three calls for American students to learn to use their minds well, so they may be prepared for responsible citizenship, further learning, and productive employment, and National Education Goal five calls for adults to possess the knowledge and skills necessary to compete in a global economy and exercise the rights and responsibilities of citizenship.

On April 23, 1992 the Secretary published a notice of proposed priority for this program in the **Federal Register** (57 FR 14956).

Note: This notice of final priority does *not* solicit applications. A notice inviting applications under this competition is published in a separate notice in this issue of the **Federal Register**.

Analysis of Comments and Changes

In response to the Secretary's invitation in the notice of proposed priority, six parties submitted comments. An analysis of the comments and of the changes in the priority since publication of the notice of proposed priority follows. Technical and other minor changes—and suggested changes the Secretary is not legally authorized to make under the applicable statutory authority—are not addressed.

Comments: Four commenters questioned the two areas of research listed as examples of other research that could be proposed in addition to the required areas of research and commented that they may dilute the focus of the projects. However, two commenters supported the suggested examples. One expressed strong support for research that would lead to the development of competency in English language skills for children with hearing impairments, pointing out that the research could possibly be applied to other client populations. Another commenter pointed out the need for emphasis on research relating to the dual sensory disability of hearing and vision loss, especially among older persons.

Discussion: The Secretary believes that the inclusion of specific examples of other areas of research may be misguided and may detract from the required research activities. The Secretary believes it is preferable to allow the applicant to determine any other areas of research to be proposed beyond those required by the absolute priority.

Changes: The specific areas of research listed as examples of other research that could be proposed and the corresponding background information have been deleted.

Comments: One commenter pointed out that a hearing research center should examine and develop methods of preventing hearing loss and promoting hearing health.

Discussion: The Secretary agrees that the prevention of hearing loss and the promotion of hearing health are important research areas. However, since this priority involves basic and applied research related to the rehabilitation of individuals with significant hearing loss, its focus is on those individuals who currently experience hearing loss. The Secretary notes that the investigations of adventitious hearing loss required under this priority could result in findings that have implications for the prevention of hearing loss and promotion of hearing health.

Changes: None.

Comments: One commenter noted that, under the selection criteria, the applicant's capacity to utilize new technology should be reviewed; specifically, that the applicant "should have the equipment or the ability to contract for services to conduct neuro-psychological testing, e.g., an EEG, MRI and CAT." In addition, the center "should have the ability to conduct neuro-psychological testing to evaluate individuals with hearing loss, e.g., using the Holstead, Reilan and Laurina-Nebraska tests."

Discussion: The Secretary believes that the selection criteria currently address this concern under (d)(1), (d)(2), (f)(2), and (g)(2). It is the responsibility of the application review panel to determine the applicants' qualifications and capabilities as they relate to the purpose and requirements of this priority. Each applicant may propose the specific technology, testing, and key staff qualifications that will be applicable to its particular research activities.

Changes: None.

Comments: One commenter specifically urged that the absolute priority put particular emphasis in the areas of age-related hearing loss, tinnitus, ototoxic action of therapeutic drugs, noise-induced hearing loss, bone conduction hearing aids, and a tinnitus data registry.

Discussion: The Secretary agrees that these areas are of concern, among others, and need attention. The Secretary points out that under the three areas of hearing research that must be addressed by the project all of the areas of concern mentioned by the commenter could be addressed.

Changes: None.

Comments: One commenter recommended that the phrase "such associated impairments as" be deleted in the second required area of research listed in the priority to elevate tinnitus to the same level as hearing loss.

Discussion: The Secretary believes that to make tinnitus a mandatory research activity, as recommended, would narrow the priority to exclude all other hearing-related conditions that

may warrant equal consideration. As drafted, the priority allows for research on tinnitus and other impairments associated with adventitious hearing loss.

Changes: None.

Comments: One commenter recommended that, in the third required area of research listed in the priority, the word "demographic" be replaced by the word "epidemiologic."

Discussion: The Secretary agrees that epidemiologic data is equally important in conducting research, treatment, and rehabilitation of individuals with significant hearing loss.

Changes: Rather than replace the word "demographic" with the word "epidemiologic," the latter has been added to the priority.

Priority

Under 34 CFR 75.105(c)(3) the Secretary gives absolute preference to applications that meet the following priority. The Secretary funds under this competition only an application that meets this absolute priority:

Absolute Priority—Hearing Research Center

Background

More than 28 million Americans are believed to have some degree of hearing impairment. Within that population, it is further estimated that about two million people have no usable hearing and are considered to be profoundly deaf (A Report of the Task Force on the National Strategic Research Plan—National Institute on Deafness and Other Communication Disorders, 1989). It is further estimated that approximately 25 percent of the 2 million deaf people in this country were born deaf or lost their hearing prior to age 18. The remaining 26 million people with impaired hearing are considered to be hard of hearing with variations from mild to severe in the degree of hearing loss. The large majority of people who are deaf or hard of hearing lost their hearing as adults and experience sensori-neural hearing impairment.

Sensori-neural hearing loss is an irreversible condition that affects over 90 percent of the hearing impaired population. Treatment approaches attain limited success for most persons with significant hearing loss. Amplification alone cannot restore normal auditory functioning in many listening situations since sensori-neural loss greatly affects the ability to discriminate speech and certain sounds. Other approaches exist to alleviate the functional limitations that attend this type of hearing loss, but considerable gaps remain in meeting the overall functional needs for many within this population.

There are approximately 97,000 new cases of Meniere's Disease each year, presenting episodes of vertigo, tinnitus, and fluctuating hearing loss (The Ear Foundation, 1991). Ongoing attacks of this disease result in increased hearing loss along with the debilitating effect of being immobilized for days at a time due to decreased hearing ability, dizziness, or tinnitus.

Tinnitus is described as an incessant ringing in the ears or other head noise that is heard when there is no external cause for that noise. According to a 1983 National Institutes of Health study, as many as 5.4 million persons in the Nation suffer so intensely from tinnitus that treatment is necessary.

Sensori-neural hearing loss, Meniere's Disease, and tinnitus are conditions that affect the functional capabilities of millions of Americans. Further research is needed to develop more and better strategies to effectively deal with these conditions.

According to rehabilitation specialists and hearing health care professionals, the degree of audiological hearing loss is not the only or primary determining factor in how well a person is going to function at school, work, home, and in the community. ("Adjustment to Post-Lingual Hearing Loss," Howard E. Stone, in "Adjustment to Acquired Hearing Loss," Edited by J.G. Kyle, 1987). Like many disabling conditions, there are numerous factors that in combination determine the kind of impact a hearing loss will have on an individual. It is important that persons providing services to this diverse population be aware of the functional ramifications of hearing loss, whether the loss is partial or total, or is characterized by early or late onset.

Other considerations that should be taken into account include the following:

(1) Personal capabilities and resources of the individual with the hearing loss;

(2) Family and community response to the disability and the resources they provide to deal with it; and

(3) Availability of resources to members of linguistic, racial, or ethnic minorities and those from non-English-speaking backgrounds.

Priority

The purpose of this priority is to support a hearing research center that will conduct applied and basic hearing research activities to further the rehabilitation of individuals with significant hearing loss. For the purpose of this priority, definitions of the following terms are proposed: Basic research is research in which the investigator is concerned primarily with gaining new knowledge or understanding of a subject without reference to any immediate application or utility. Applied research is research in which the investigator is primarily interested in developing new knowledge, information, or understanding that can be applied to a predetermined rehabilitation problem or need. Applied research builds on selected findings from basic research. (34 CFR 350.4). Significant hearing loss means a hearing loss of such magnitude that it is likely to result in a loss of functional capacity in educational, vocational, or social settings, or in the performance of activities of daily living.

Areas of research must include, but are not limited to—(1) Basic and applied research activities that explore diagnosing, understanding, and treating hearing disorders, including the development of applicable technology and assessment of interventions that increase communicative, vocational, social, and family functioning of individuals with significant hearing loss; (2) comprehensive investigations of adventitious hearing loss and such associated impairments as tinnitus; and (3) collection and analysis of demographic and epidemiologic data on individuals with hearing impairments that would assist in the research, treatment, and rehabilitation of individuals with significant hearing loss.

Evaluation of Applications and Selection Criteria

For this competition only, the Secretary will use the following selection criteria to evaluate applications. The maximum total score for an application is 100 points:

(a) *Potential Impact of Outcomes: Importance of Program* (15 points). The Secretary reviews each application to determine to what degree—

(1) The proposed activity relates to the announced priority;

(2) The research is likely to produce new and useful information;

(3) The need and target population are adequately defined; and

(4) The outcomes are likely to benefit the defined target population.

(b) *Potential Impact of Outcomes: Dissemination and Utilization* (15 points). The Secretary reviews each application to determine to what degree—

(1) The research results are likely to become available to others working in the field; and

(2) The means to disseminate and promote use by others are defined.

(c) *Probability of Achieving Proposed Outcomes: Program and Project Design* (20 points). The Secretary reviews each application to determine to what degree—

(1) The objectives of the project are clearly stated;

(2) The hypothesis is sound and based on evidence;

(3) The project design and methodology are likely to achieve the objectives;

(4) The measurement methodology and analysis are sound;

(5) The conceptual model, if used, is sound;

(6) The sampling, if proposed, meets statistical standards; and

(7) The human subjects are sufficiently protected.

(d) *Probability of Achieving Proposed Outcomes: Key Personnel* (20 points). The Secretary reviews each application to determine to what degree—

(1) The principal investigator and other key staff have adequate training or experience and demonstrate appropriate potential to conduct the proposed research activity;

(2) The principal investigator and other key staff are familiar with pertinent literature or methods;

(3) All required disciplines are effectively covered;

(4) Commitments of staff time are adequate for the project; and

(5) The applicant is likely, as part of its non-discriminatory employment practices, to encourage applications for employment from persons who are members of groups that traditionally have been underrepresented, such as—

(i) Members of racial or ethnic minority groups;

(ii) Women;

(iii) Persons with handicaps; and

(iv) Elderly persons.

(e) *Probability of Achieving Proposed Outcomes: Evaluation Plan* (10 points). The Secretary reviews each application to determine to what degree—

(1) There is a mechanism to evaluate plans, progress, and results;

(2) The evaluation methods and objectives are likely to produce data that are statistically valid and quantifiable; and

(3) The evaluation results are likely to have clear implications for further research or methods of service.

(f) *Program and Project Management: Plan of Operation* (10 points). The Secretary reviews each application to determine to what degree—

(1) There is an effective plan of operation that ensures proper and efficient administration of the project;

(2) The applicant's planned use of its resources and personnel is likely to achieve each objective;

(3) Collaboration between institutions, if proposed, is likely to be effective; and

(4) There is a clear description of how the applicant will include eligible project participants who have been traditionally underrepresented, such as—

(i) Members of racial or ethnic minority groups;

(ii) Women;

(iii) Persons with handicaps; and

(iv) Elderly persons.

(g) *Program and Project Management: Adequacy of Resources* (5 points). The Secretary reviews each application to determine to what degree—

(1) The facilities planned for use are adequate;

(2) The equipment and supplies planned for use are adequate; and

(3) The commitment of the applicant to provide administrative support and adequate facilities is evident.

(h) *Program and Project Management: Budget and Cost Effectiveness* (5 points). The Secretary reviews each application to determine to what degree—

(1) The budget for the project is adequate to support the activities;

(2) The costs are reasonable in relation to the objectives of the project; and

(3) The budget for subcontracts, if required, is detailed and appropriate.

(Approved by the Office of Management and Budget under control number 1820-0598)

Intergovernmental Review

This program is subject to the requirements of Executive Order 12372 and the regulations in 34 CFR part 79. The objective of the Executive order is to foster an intergovernmental partnership and a strengthened federalism by relying on processes developed by State and local governments for coordination and review of proposed Federal financial assistance.

In accordance with the order, this document is intended to provide early notification of the Department's specific plans and actions for this program.

Applicable Program Regulations

34 CFR parts 369 and 373, except §§ 369.30 through 369.32 and § 373.30.

Program Authority: 29 U.S.C. 777a.

(Catalog of Federal Domestic Assistance Number 84.235, Special Projects and Demonstrations for Providing Vocational Rehabilitation Services to Individuals with Severe Handicaps)

Dated: July 7, 1992.

Lamar Alexander,

Secretary of Education.

[FR Doc. 92-17484 Filed 07-23-92; 8:45 am]

BILLING CODE 4000-01-M

DEPARTMENT OF EDUCATION

[CFDA No. 84.235K]

Special Projects and Demonstrations for Providing Vocational Rehabilitation Services to Individuals with Severe Handicaps; Hearing Research Center, Inviting Applications for New Awards for Fiscal Year (FY) 1993

Purpose of Program: This program provides support to a hearing research center that will conduct basic and applied hearing research activities to further the rehabilitation of individuals with significant hearing loss.

Eligible Applicants: States and other public and nonprofit agencies and organizations are eligible to apply for an award under this program.

Deadline for Transmittal of Applications: September 8, 1992.

Deadline for Intergovernmental Review: November 7, 1992.

Applications Available: July 27, 1992.

Available Funds: $6 million in total funds is available over a project period of up to 60 months. Annual amounts provided will be based on the needs of the project and satisfactory performance.

Estimated Number of Awards: 1.

Note: The Department is not bound by any estimates in this notice.

Project Period: Up to 60 months.

Applicable Regulations: (a) The Education Department General Administrative Regulations (EDGAR) in 34 CFR parts 74, 75, 77, 79, 80, 81, 82, 85, and 86; and (b) The regulations for this program in 34 CFR parts 369 and 373, except §§ 369.30 through 369.32 and § 373.30.

Priority: The priority in the notice of final priority for this program, as published elsewhere in this issue of the **Federal Register**, applies to this competition.

This program, as well as the final priority, supports AMERICA 2000, the President's strategy for moving the Nation toward achievement of the National Education Goals, by supporting research activities related to the education and rehabilitation of persons severely handicapped by hearing loss. National Education Goal three calls for American students to learn to use their minds well, so they may be prepared for responsible citizenship, further learning,

and productive employment, and National Educational Goal five calls for adults to possess the knowledge and skills necessary to compete in a global economy and exercise the rights and responsibilities of citizenship.

For Applications or Information Contact: George N. Kosovich, U.S. Department of Education, 400 Maryland Avenue, SW., room 3221 Switzer Building, Washington, DC 20202-2736. Telephone: (202) 205-9698 (Voice) or (202) 205-8919 (TDD).

Program Authority: 29 U.S.C. 777a.

Dated: July 20, 1992.

Robert R. Davila,

Assistant Secretary, Office of Special Education and Rehabilitative Services.

[FR Doc. 92-17485 Filed 7-23-92; 8:45 am]

BILLING CODE 4000-01-M

federal register

Friday
July 24, 1992

Part IV

Department of Education

Training Personnel for the Education of Individuals with Disabilities; Inviting Applications for Fiscal year 1993; Notice

DEPARTMENT OF EDUCATION

[CFDA No.: 84.029]

Training Personnel for the Education of Individuals With Disabilities; Inviting Applications for Fiscal Year (FY) 1993

Note to Applicants: This notice is a complete application package. Together with the statute authorizing the programs and applicable regulations governing the programs, including the Education Department General Administrative Regulations (EDGAR), the notice contains all of the information, application forms, and instructions needed to apply for a grant under these competitions.

The Training Personnel for the Education of Individuals with Disabilities programs support AMERICA 2000, the President's strategy for moving the Nation toward the National Education Goals, by improving services for infants, toddlers, children, and youth with disabilities and by so doing helping them to reach the high levels of achievement called for in the National Education Goals. National Education Goal 1 calls for all children to start school ready to learn, and National Education Goal 3 calls for American students to demonstrate competency in challenging subject matter and to learn to use their minds well.

The regulations that apply to the competitions announced in this package are 34 CFR parts 316 and 318, as amended on October 22, 1991 (See **Federal Register** 54693–54694). The Department advises that a Notice of Proposed Rulemaking (NPRM) is about to be published that would amend these regulations, which implement the Training Personnel programs authorized under section 631 of the Individuals with Disabilities Education Act (IDEA).

The current regulations are being amended to reflect changes made to IDEA by amendments enacted in 1991 (Pub. L. 102–119), and to otherwise update and clarify the regulations. The Department does not anticipate that the new regulations for parts 316 and 318 will be effective prior to awards being made under the priorities announced in this package. However, to the extent that the new regulations are effective prior to awards being made, and substantially differ from the current regulations, applicants will be given an opportunity to amend their applications.

TRAINING PERSONNEL FOR EDUCATION OF INDIVIDUALS WITH DISABILITIES PARENT TRAINING AND INFORMATION CENTERS

[Application notice for fiscal year 1993]

Title and CFDA No.	Deadline for transmittal of applications	Deadline for intergovernmental review	Available funds	Estimated range of awards (per year)	Estimated size of awards (per year)	Estimated number of awards	Project period in months
Parent Training and Information Centers (84.029M)	9–15–92	11–16–92	$500,000	$80,000–120,000	$100,000	5	Up to 60.

Training Personnel for the Education of Individuals With Disabilities—Parent Training and Information Centers

Purpose of Program: This program authorized under section 631(d) of IDEA, supports grants to parent organizations for the purpose of providing training and information to parents of infants, toddlers, children, and youth with disabilities, and persons who work with parents to enable such individuals to participate more effectively with professionals in meeting the educational needs of their children with disabilities.

Eligible Applicants: Parent organizations are eligible applicants under this priority.

Applicable Regulations: (a) The Education Department General Administrative Regulations (EDGAR) in 34 CFR parts 74, 75, 77, 79, 81, 82, and 85; (b) The regulations for this program in 34 CFR part 316, as amended on October 22, 1991. See 56 **Federal Register** 54693–54694.

Priorities: Under 34 CFR 75.105(c)(3) and section 631(d)(1) of the Individuals with Disabilities Education Act the Secretary gives an absolute preference to applications that meet the following priority. The Secretary funds under this competition only applications that meet this absolute priority under the Parent Training and Information Centers program.

Description of Program: As required by section 631(d)(4)(c) of IDEA, applicants must identify with specificity the special efforts that will be undertaken to involve parents of minority children with disabilities (including parents of children with disabilities birth through age 5), representative to the proportion of minority population in the areas being served, including efforts to work with community-based and cultural organizations and the specification of supplementary aids, services, and supports that will be made available, and by specifying budgetary items earmarked for those purposes.

In expending amounts provided to a grantee for fiscal years 1993 and 1994 that are in excess of the amount provided under this program for 1992, the grantee shall give priority to providing services to parents of children with disabilities aged 0–5.

Absolute Priority

This priority supports parent training and information projects that must be designed to assist parents to—

(a) Understand the nature and needs of the disabling conditions of their children with disabilities.

(b) Provide follow-up support for their children with disabilities educational programs;

(c) Communicate more effectively with special and regular educators, administrators, related services personnel, and other relevant professionals;

(d) Participate in educational decision-making processes, including the development of their child or youth's individualized education program;

(e) Obtain appropriate information about the range of options, programs, services, and resources available at the national, State, and local levels to children with disabilities, and their families; and

(f) Understand the provisions for educating children with disabilities under the Act.

Selection Criteria: (a)(1) The Secretary uses the following selection criteria to evaluate applications for new grants under this competition.

(2) The maximum score for all of these criteria is 100 points.

(3) The maximum score for each criterion is indicated in parentheses.

(b) *The criteria*—(1) *Extent of present and projected needs.* (15 points) The Secretary reviews each applicant to determine the extent to which the project makes an impact on parent training and information needs, consistent with the purposes of the Act, including consideration of the impact on—

(i) The present and projected needs in the applicant's geographic area for trained parents; and

(ii) The present and projected training and information needs for personnel to work with parents of children with disabilities.

(2) *Anticipated project results.* (25 points) The Secretary reviews each application to determine the extent to which the project will assist parents to—

(i) Understand the nature and needs of the disabling conditions of their children;

(ii) Provide follow-up support for their children's educational program;

(iii) Communicate more effectively with special and regular educators, administrators, related services personnel, and other relevant professionals;

(iv) Participate fully in educational decision-making processes, including the development of their child or youth's individualized educational program;

(v) Obtain information about the programs, services, and resources available to their children and youth and the degree to which the programs, services, and resources are appropriate to the needs of their children; and

(vi) Understand the provisions for educating children with disabilities under the Act.

(3) *Plan of operation.* (20 points) The Secretary reviews each application to determine the quality of the plan of operation for the project, including—

(i) High quality in the design of the project;

(ii) An effective management plan that ensures proper and efficient administration of the project;

(iii) How the objectives of the project relate to the purpose of the program; and

(iv) The way the applicant plans to use its resources and personnel to achieve each objective.

(4) *Evaluation plan.* (15 points) The Secretary reviews each application to determine the quality of the evaluation plan for the project, including the extent to which the applicant's methods of evaluation—

(i) Are appropriate for the project; and

(ii) To the extent possible, are objective and produce data that are quantifiable. (See 34 CFR 75.590, Evaluation by the grantee.)

(5) *Quality of key personnel.* (15 points) The Secretary reviews each application to determine the quality of the key personnel the applicant plans to use in the project, including—

(i) The qualifications of the project director;

(ii) The qualifications of each of the other key personnel to be used on the project;

(iii) The time that each of the key personnel plans to commit to the project;

(iv) How the applicant, as a part of its nondiscriminatory practices, will ensure that its personnel are selected for employment without regard to race, color, national origin, gender, age, or disability; and

(v) Evidence of the applicant's past experience and training in the fields relating to the objectives of the project.

(6) *Budget and cost-effectiveness.* (10 points) The Secretary reviews each application to determine the extent to which—

(i) The budget is adequate to support the project; and

(ii) Costs are reasonable in relation to the objectives of the project.

TRAINING PERSONNEL FOR THE EDUCATION OF INDIVIDUALS WITH DISABILITIES—GRANTS FOR PERSONNEL TRAINING

[Application notice for fiscal year 1993]

Title and CFDA No.	Deadline for transmittal of applications	Deadline for intergovernmental review	Available funds	Estimated range of awards (per year)	Estimated size of awards (per year)	Estimated number of awards	Project period in months
Special Projects (84.029K)	11-30-92	2-01-93	$2,000,000	$75,000-125,000	$100,000	20	Up to 60.

Training Personnel for the Education of Individuals With Disabilities—Special Projects

Purpose of Program: This program, authorized under section 631(b) of IDEA, serves to increase the quantity and improve the quality of personnel available to serve infants, toddlers, children, and youth with disabilities through support of special projects.

Eligible Applicants: Institutions of higher education, State agencies, and other appropriate nonprofit agencies are eligible applicants.

Applicable Regulations: (a) The Education Department General Administrative Regulations (EDGAR) in 34 CFR Parts 74, 75, 77, 79, 80, 81, 82, 85, and 86; (b) The regulations for this program in 34 CFR Part 318.

Priorities: Under 34 CFR 75.105(c)(3), 34 CFR 318.1(c), and 34 CFR 318.11(e) the Secretary gives an absolute preference to applications that meet the following priority. The Secretary funds under this competition only applications that meet this absolute priority:

Absolute Priority

Special projects. (1) This priority supports projects that include development, evaluation, and distribution of innovative approaches to personnel preparation; development of curriculum materials to prepare personnel to educate or provide early intervention services; and other projects of national significance related to the preparation of personnel needed to serve infants, toddlers, children, and youth with disabilities.

(2) Appropriate areas of interest include—

(i) Preservice training programs to prepare regular educators to work with children and youth with disabilities and their families;

(ii) Training teachers to work in community and school settings with children and youth with disabilities and their families;

(iii) Inservice and preservice training of teachers to work with infants, toddlers, children, and youth with disabilities and their families;

(iv) Inservice and preservice training of personnel to work with minority infants, toddlers, children, and youth with disabilities and their families;

(v) Preservice and inservice training of special education and related services personnel in instructive and assistive technology to benefit infants, toddlers, children, and youth with disabilities; and

(vi) Recruitment and retention of special education, related services, and early intervention personnel.

(3) Both inservice and preservice training must include a component that addresses the coordination among all service providers, including regular educators.

Invitational Priorities

Within the absolute priority specified in this notice, the Secretary is

particularly interested in applications that meet the following invitational priority. However, under 34 CFR 75.105(c)(1) an application that meets this invitational priority does not receive a competitive or absolute preference over other applications that do not meet this invitational priority.

Preparing personnel to meet the National Education Goals. Projects that develop or expand innovative preservice and inservice training programs that are designed to provide personnel serving children with disabilities with skills that are needed to help children and schools meet the National Education Goals.

These projects are encouraged to promote:

(1) Increased collaboration among special education, regular education, bilingual education, migrant education, vocational education, and public and private agencies and institutions.

(2) Improved coordination of services among health and social services agencies and within communities regarding services for children with disabilities and their families.

(3) Increased systematic parental involvement in the education of their children with disabilities.

(4) Inclusion of children with disabilities in all aspects of education and society.

(5) Training that is designed to enable special education teachers to teach, as appropriate, to world class standards as they are developed, such as those developed by the National Council on Teachers of Mathematics.

Selection Criteria: (a) (1) The Secretary uses the following selection criteria to evaluate applications for new grants under this competition.

(2) The maximum score for all of these criteria is 100 points.

(3) The maximum score for each criterion is indicated in parentheses.

(b) *The criteria*—(1) *Anticipated project results.* (20 points) The Secretary reviews each application to determine the extent to which the project will meet present and projected needs under parts B and H of the Act in special education, related services, or early intervention services personnel development.

(2) *Program content.* (20 points) The Secretary reviews each application to determine—

(i) The project's potential for national significance, its potential for replication and effectiveness, and the quality of its plan for dissemination of the results of the project;

(ii) The extent to which substantive content and organization of the program—

(A) Are appropriate for the attainment of knowledge that is necessary for the provision of quality educational and early intervention services to infants, toddlers, children, and youth with disabilities; and

(B) Demonstrate an awareness of relevant methods, procedures, techniques, technology, and instructional media or materials that can be used in the development of a model to prepare personnel to serve infants, toddlers, children, and youth with disabilities; and

(iii) The extent to which program philosophy, objectives, and activities are related to the educational or early intervention needs of infants, toddlers, children, and youth with disabilities.

(3) *Plan of operation.* (15 points) The Secretary reviews each application to determine the quality of the plan of operation for the project, including—

(i) High quality in the design of the project;

(ii) An effective plan of management that ensures proper and efficient administration of the project;

(iii) How the objectives of the project relate to the purpose of the program; and

(iv) The way the applicant plans to use its resources and personnel to achieve each objective.

(4) *Evaluation plan.* (15 points) The Secretary reviews each application to determine the quality of the evaluation plan for the project, including the extent to which the applicant's methods of evaluation—

(i) Are appropriate for the project; and

(ii) To the extent possible, are objective and produce data that are quantifiable. (See 34 CFR 75.590, Evaluation by the grantee.)

(5) *Quality of key personnel.* (15 points) The Secretary reviews each application to determine the quality of the key personnel the applicant plans to use in the project, including—

(i) The qualifications of the project director;

(ii) The qualifications of each of the other key personnel to be used in the project;

(iii) The time that each of the key personnel plans to commit to the project;

(iv) How the applicant, as a part of its nondiscriminatory employment practices, will ensure that its personnel are selected for employment without regard to race, color, national origin, gender, age, or disability; and

(v) Evidence of the applicant's past experience and training in fields related to the objectives of the project.

(6) *Adequacy of resources.* (5 points) The Secretary reviews each application to determine the adequacy of the resources that the applicant plans to devote to the project, including facilities, equipment, and supplies.

(7) *Budget and cost effectiveness.* (10 points) The Secretary reviews each application to determine the extent to which—

(i) The budget is adequate to support the project; and

(ii) Costs are reasonable in relation to the objectives of the objectives of the project.

TRAINING PERSONNEL FOR THE EDUCATION OF INDIVIDUALS WITH DISABILITIES—GRANTS FOR PERSONNEL TRAINING

[Application notice for fiscal year 1993]

Title and CFDA No.	Deadline for transmittal of applications	Deadline for intergovernmental review	Available funds	Estimated range of awards (per year)	Estimated size of awards (per year)	Estimated number of awards	Project period in months
Preparation of leadership personnel (84.029D)	10/19/92	12/21/92	$2,500,000	$75,000–125,000	$100,000	25	Up to 60.
Preparation of personnel for careers in special education (84.029B).	10/19/92	12/21/92	7,000,000	75,000–125,000	100,000	70	Up to 48.
Preparation of related services personnel (84.029F)	09/18/92	11/18/92	2,500,000	75,000–125,000	100,000	25	Up to 48.
Training early intervention and preschool personnel (84.029Q).	09/18/92	11/18/92	2,000,000	75,000–125,000	100,000	20	Up to 60.

Training Personnel for the Education of Individuals With Disabilities—Grants for Personnel Preparation

Purpose of Program: This program, authorized under section 631(a) of IDEA, serves to increase the quantity and improve the quality of personnel available to serve infants, toddlers, children and youth with disabilities through support of training programs for—(a) Special education, related services, and early intervention; and (b) Leadership.

Eligible Applicants: Institutions of higher education and other appropriate nonprofit agencies are eligible applicants.

Priorities: Under 34 CFR 75.105(c)(3) and 34 CFR 318, the Secretary gives an absolute preference to applications which meet the following priorities. The Secretary funds under this program only those applications that meet one or more these absolute priorities.

Under competitive priorities the Secretary may select an application that meets a priority over an application of comparable merit that does not meet the priority. Absolute priorities numbers 2–4 have competitive priorities within them.

Absolute Priority 1—Preparation of Leadership Personnel, CFDA No. 84.029D

This priority supports projects that are designed to provide preservice advanced graduate, doctoral, and post-doctoral preparation in administration and supervision; or doctoral and post-doctoral level training in research or personnel preparation.

Invitational Priority. Under 34 CFR 75.105(c)(1) the Secretary is particularly interested in applications that meet the following invitational priority. However, an application that meets this invitational priority does not receive a competitive or absolute preference over other applications:

Training minority leadership personnel. The Individuals with Disabilities Education Act (IDEA) in section 610(j)(2) (A) and (B) recommends implementing policies for preparing minorities in special education and related services. The Department believes that one aspect of this policy is to support leadership level training for minority individuals. For this reason, the Secretary particularly invites applications that include activities to recruit minority individuals and individuals from under-represented populations for doctoral and post-doctoral level training to increase their participation in leadership positions in the field of special education and related services.

Absolute Priority 2—Preparation of Personnel for Careers in Special Education, CFDA No. 84.029B

This priority supports preservice preparation of personnel for careers in special education. Preservice training includes additional training for currently employed teachers seeking additional degrees, certifications, or endorsements. Training at the baccalaureate, masters, or specialist level is appropriate. Under this priority "personnel" includes special education teachers, speech-language pathologists, audiologists, adapted physical education teachers, vocational educators, and instructive and assistive technology specialists.

Competitive Priorities. Within this competition, under 34 CFR 75.105(c)(2), the Secretary gives preference to the applications that meet one or more of the following competitive priorities. An application that meets one or more of these competitive priorities is selected over applications of comparable merit that do not meet these priorities. These competitive priorities are described more fully in a later section of this announcement.

Utilizing innovative recruitment and retention strategies.

Promoting full qualifications for personnel serving infants, toddlers, children, and youth with disabilities.

Training personnel to work in rural areas.

Training personnel to provide transition assistance from school to adult roles.

Improving services for minorities.

Training minority personnel.

Absolute Priority 3—Preparation of Related Services Personnel, CFDA No. 84.029F

This priority supports preservice preparation of individuals to provide developmental, corrective, and other supportive services that assist children and youth with disabilities to benefit from special education. These include paraprofessional personnel, therapeutic recreation specialists, school social workers, health service providers, physical therapists (PT), occupational therapists (OT), school psychologists, counselors including rehabilitation counselors, interpreters, orientation and mobility specialists, respite care providers, art therapists, volunteers, physicians, and other related services personnel. Projects to train personnel identified as special education personnel in the regulations in this part are not appropriate, even if those personnel may be considered related services personnel in other settings.

This program is not designed for general training. Projects must include inducements and preparation to increase the probability that graduates will direct their efforts toward supportive services to special education. For example, a project in occupational therapy might support a special component on pediatric or juvenile psychiatric OT, support those students whose career goal is OT in the schools, or provide for practica and internships in school settings.

Competitive Priorities. Within this competition, under 34 CFR 75.105(c)(2), the Secretary gives preference to the applications that meet one or more of the following competitive priorities. An application that meets one or more of these competitive priorities is selected over applications of comparable merit that do not meet these priorities. These competitive priorities are described more fully in a later section of this announcement.

Utilizing innovative recruitment and retention strategies.

Promoting full qualifications for personnel serving infants, toddlers, children, and youth with disabilities.

Training personnel to work in rural areas.

Preparation of paraprofessionals.

Improving services for minorities.

Training minority personnel.

Absolute Priority 4—Training Early Intervention and Preschool Personnel. CFDA 84.029Q

This priority supports projects that are designed to provide preservice preparation of personnel who serve infants, toddlers, and preschool children with disabilities, and their families. Personnel may be prepared to provide short-term services or long-term services that extend into a child's school program. The proposed training program must have a clear and limited focus on the special needs of children within the age range from birth to five, and must include consideration of family involvement in early intervention and preschool services. Training programs under this priority must have a significant interdisciplinary focus.

Competitive Priorities. Within this competition, under 34 CFR 75.105(c)(2), the Secretary gives preference to the applications that meet one or more of the following competitive priorities. An application that meets one or more of these competitive priorities is selected over applications of comparable merit that do not meet these priorities. These competitive priorities are described more fully in a later section of this announcement.

Utilizing innovative recruitment and retention strategies.

Promoting full qualifications for personnel serving infants, toddlers, children, and youth with disabilities.

Training personnel to work in rural areas.

Preparation of paraprofessionals.

Improving services for minorities.

Training minority personnel.

Competitive Priorities: As noted in connection with each absolute priority, the Secretary gives preference to applications that meet one or more of the following competitive priorities. Under each absolute priority the Secretary may select an application that meets a competitive priority over an application of comparable merit that does not meet the competitive priority.

Competitive Preference Priority 1—Utilizing Innovative Recruitment and Retention Strategies

This priority supports projects to develop emerging and creative sources of supply of personnel with degrees and certification in appropriate disciplines, and innovative strategies related to recruitment and retention of personnel.

Competitive Preference Priority 2—Promoting Full Qualifications for Personnel Serving Infants, Toddlers, Children, and Youth With Disabilities

This priority supports projects designed specifically to train personnel who are working with less than full certification or outside their field of specialization, to assist them in becoming fully qualified. Student incentives; extension, summer and evening programs; internships; alternative certification plans; and other innovative practices are appropriate under this priority.

Competitive Preference Priority 3—Training Personnel To Work in Rural Areas

This priority supports projects to train personnel to serve infants, toddlers, children, and youth with disabilities in rural areas. Projects, including curricula, procedures, practica, and innovative use of technology, must be designed to provide training to assist personnel to work with parents, teachers, and administrators in these special environments. Special strategies must be designed to recruit personnel from rural areas who will most likely return to those areas.

Competitive Preference Priority 4—Training Personnel to Provide Transition Assistance From School to Adult Roles

This priority supports projects for preparation of personnel who assist youth with disabilities in their transition from school to adult roles. Personnel may be prepared to provide short-term transitional services, long-term structured employment services, or instruction in community and school settings with secondary school students. It is especially important that preparation of transition personnel include training in instructional and assistive technology.

Competitive Preference Priority 5—Preparation of Paraprofessionals

This priority supports projects for the preparation of paraprofessionals. This includes programs to train teacher aids, job coaches, interpreters, therapy assistants, and other personnel who provide support to professional staff in delivery of services to infants, toddlers, children, and youth with disabilities.

Competitive Preference Priority 6—Improving Services for Minorities

This priority supports projects to prepare personnel to serve infants, toddlers, children, and youth with disabilities who, because of minority status, require that personnel obtain professional competencies in addition to those needed to teach other children with similar disabilities. Projects funded under this priority must focus on specific minority populations, determine the additional competencies that are needed by professionals serving those populations, and develop those competencies.

Competitive Preference Priority 7—Training Minority Personnel

This priority supports projects to recruit and prepare minority individuals and individuals with disabilities for careers in special education, related services, and early intervention, including leadership personnel.

Selection Criteria: (a)(1) The Secretary uses the following selection criteria to evaluate applications for new grants under this competition.

(2) The maximum score for all of these criteria is 100 points.

(3) The maximum score for each criterion is indicated in parentheses.

(b) *The criteria*—(1) *Impact on critical present and projected need.* (30 points) The Secretary reviews each application to determine the extent to which the training will have a significant impact on critical present and projected State, regional, or national needs in the quality or the quantity of personnel serving infants, toddlers, children, and youth with disabilities. The Secretary considers—

(i) The significance of the personnel needs to be addressed to the provision of special education, related services, and early intervention. Significance of need identified by the applicant may be shown by—

(A) Evidence of critical shortages of personnel to serve infants, toddlers, children, and youth with disabilities, including those with limited English proficiency, in targeted specialty or geographic areas, as demonstrated by data from the State Comprehensive System of Personnel Development; reports from the Clearinghouse on Careers and Employment of Personnel serving children and youth with disabilities; or other indicators of need that the applicant demonstrates are relevant, reliable, and accurate; or

(B) Evidence showing significant need for improvement in the quality of personnel providing special education, related services and early intervention services, as shown by comparisons of actual and needed skills of personnel in targeted specialty or geographic areas; and

(ii) The impact the proposed project will have on the targeted need. Evidence that the project results will have an impact on the targeted needs may include—

(A) The projected number of graduates from the project each year who will have necessary competencies and certification to affect the need;

(B) For ongoing programs, the extent to which the applicant's projections are supported by the number of previous program graduates that have entered the field for which they received training, and the professional contributions of those graduates; and

(C) For new programs, the extent to which program features address the projected needs, the applicant's plan for helping graduates locate appropriate employment in the area of need, and the program features that ensure that graduates will have competencies needed to address identified qualitative needs.

(2) *Capacity of the institution.* (25 points) The Secretary reviews each application to determine the capacity of the institution or agency to train qualified personnel, including consideration of—

(i) The qualifications and accomplishments of the project director and other key personnel directly involved in the proposed training program, including prior training, publications, and other professional contributions;

(ii) The amount of time each key person plans to commit to the project;

(iii) How the applicant, as a part of its nondiscriminatory employment

practices, will ensure that its personnel are selected for employment without regard to race, color, national origin, gender, age, or disability;

(iv) The adequacy of resources, facilities, supplies, and equipment that the applicant plans to commit to the project;

(v) The quality of the practicum training settings, including evidence that they are sufficiently available; apply state-of-the-art services and model teaching practices, materials, and technology; provide adequate supervision to trainees; offer opportunities for trainees to teach; and foster interaction between students with disabilities and their nondisabled peers;

(vi) The capacity of the applicant to recruit well-qualified students;

(vii) The experience and capacity of the applicant to assist local public schools and early intervention service agencies in providing training to these personnel, including the development of model practica sites; and

(viii) The extent to which the applicant cooperates with the State educational agency, the State designated lead agency under Part H of the Act, other institutions of higher education, and other appropriate public and private agencies in the region served by the applicant in identifying personnel needs and plans to address those needs.

(3) *Plan of operation.* (25 points) The Secretary reviews each application to determine the quality of the plan of operation for the project, including—

(i) High quality in the design of the project;

(ii) The extent to which the plan of management ensures effective, proper, and efficient administration of the project;

(iii) How well the objectives of the project relate to the purpose of the program;

(iv) The way the applicant plans to use its resources and personnel to achieve each objective;

(v) The extent to which the application includes a delineation of competencies that program graduates will acquire and how the competencies will be evaluated;

(vi) The extent to which substantive content and organization of the program—

(A) Are appropriate for the students' attainment of professional knowledge and competencies deemed necessary for the provision of quality educational and early intervention services for infants, toddlers, children, and youth with disabilities; and

(B) Demonstrate an awareness of methods, procedures, techniques, technology, and instructional media or materials that are relevant to the preparation of personnel who serve infants, toddlers, children, and youth with disabilities; and

(vii) The extent to which program philosophy, objectives, and activities implement current research and demonstration results in meeting the educational or early intervention needs of infants, toddlers, children, and youth with disabilities.

(4) *Evaluation plan.* (10 points) The Secretary reviews each application to determine the quality of the evaluation plan for the project, including the extent to which the applicant's methods of evaluation—

(i) Are appropriate for the project;

(ii) To the extent possible, are objective and produce data that are quantifiable, including, but not limited to, the number of trainees graduated and hired; and

(iii) Provide evidence that evaluation data and student follow-up data are systematically collected and used to modify and improve the program. (See 34 CFR 75.590, Evaluation by the grantee.)

(5) *Budget and cost-effectiveness.* (10 points) The Secretary reviews each application to determine the extent to which—

(i) The budget for the project is adequate to support the project activities;

(ii) Costs are reasonable in relation to the objectives of the project; and

(iii) The applicant presents appropriate plans for the institutionalization of Federally supported activities into basic program operations.

Intergovernmental Review

These programs are subject to the requirements Executive Order 12372 (Intergovernmental Review of Federal Programs) and the regulations in 34 CFR part 79.

The objective of the Executive order is to foster an intergovernmental partnership and to strengthen federalism by relying on State and local processes for State and local government coordination and review of proposed Federal financial assistance.

Applicants must contact the appropriate State Single Point of Contact to find out about, and to comply with, the State's process under Executive Order 12372. Applicants proposing to perform activities in more than one State should immediately contact the Single Point of Contact for each of those States and follow the procedure established in each State under the Executive Order. If you want to know the name and address of any State Single Point of Contact, see the list published in the **Federal Register** on September 17, 1990 (55 FR 38210 and 38211).

In States that have not established a process or chosen a program for review, State, area-wide, regional, and local entities may submit comments directly to the Department.

Any State Process Recommendation and other comments submitted by a State Single Point of Contact and any comments from State, area-wide, regional, and local entities must be mailed or hand-delivered by the dates indicated in this notice to the following address: The Secretary, E.O. 12372—CFDA#84.029____, U.S. Department of Education, room 4161, 400 Maryland Avenue, SW., Washington, DC 20202-0125.

Proof of mailing will be determined on the same basis as applications (see 34 CFR 75.102). Recommendations or comments may be hand-delivered until 4:30 p.m. (Washington, DC time) on the date indicated in this notice.

Please note that the above address is not the same address as the one to which the applicant submits its completed application. Do not send applications to the above address. *Instructions for transmittal of applications:*

(a) If an applicant wants to apply for a grant, the applicant shall—

(1) Mail the original and two copies of the application on or before the deadline date to:

U.S. Department of Education,
Application Control Center, Attention: (CFDA #84.029____), Washington, DC 20202-4725

or

(2) Hand deliver the original and two copies of the application by 4:30 p.m. (Washington, DC time) on the deadline date to:

U.S. Department of Education,
Application Control Center, Attention: (CFDA #84.029____), Room #3633, Regional Office Building #3, 7th and D Streets, SW., Washington, DC.

(b) An applicant must show one of the following as proof of mailing:

(1) A legibly dated U.S. Postal Service postmark.

(2) A legible mail receipt with the date of mailing stamped by the U.S. Postal Service.

(3) A dated shipping label, invoice, or receipt from a commercial carrier.

(4) Any other proof of mailing acceptable to the Secretary.

(c) If an application is mailed through the U.S. Postal Service, the Secretary

does not accept either of the following as proof of mailing:

(1) A private metered postmark.

(2) A mail receipt that is not dated by the U.S. Postal Service.

Notes: (1) The U.S. Postal Service does not uniformly provide a dated postmark. Before relying on this method, an applicant should check with its local post office.

(2) The Application Control Center will mail a Grant Application Receipt Acknowledgement to each applicant. If an applicant fails to receive the notification of application receipt within 15 days from the date of mailing the application, the applicant should call the U.S. Department of Education Application Control Center at (202) 708-9494.

(3) The applicant must indicate on the envelope and—if not provided by the Department—in item 10 of the Application for Federal Assistance (Standard Form 424) the CFDA number—and suffix letter, if any—of the competition under which the application is being submitted.

Application Instructions and Forms

The appendix to this application is divided into three parts plus a section on common questions and answers, a statement regarding estimated public reporting burden, and various assurances and certifications. These parts and additional materials are organized in the same manner that the submitted applications should be organized. The parts and additional materials are as follows:

Part I: Application for Federal Assistance (Standard Form 424 (Rev. 4-88)) and instructions.

Part II: Budget Information—Non-Construction Programs (Standard Form 424A) and instructions.

Part III: Application Narrative.

Additional Materials

Estimated Public Reporting Burden.

Assurances—Non-Construction Programs (Standard Form 424B).

Certifications regarding Lobbying; Debarment, Suspension, and Other Responsibility Matters; and Drug-Free Workplace Requirements (ED 80-0013).

Certification regarding Debarment, Suspension, Ineligibility and Voluntary Exclusion: Lower Tier Covered Transactions (ED 80-0014, 9/90) and instructions.

(Note: ED 80-0014 is intended for the use of grantees and should not be transmitted to the Department.)

Disclosure of Lobbying Activities (Standard Form LLL) (if applicable) and instructions; and Disclosure of Lobbying Activities Continuation Sheet (Standard Form LLL-A).

An applicant may submit information on a photostatic copy of the application and budget forms, the assurances, and the certifications. However, the application form, the assurances, and the certifications must each have an original signature. No grant may be awarded unless a completed application form has been received.

FOR FURTHER INFORMATION CONTACT: Max Mueller, U.S. Department of Education, 400 Maryland Avenue, SW., Washington, DC 20202-2651. Telephone: (202) 205-9554. Deaf and hard of hearing individuals may call (202) 205-9999 for TDD services.

Authority: 20 U.S.C. 1431.

Dated: July 20, 1992.

Robert R. Davila,

Assistant Secretary, Office of Special Education and Rehabilitative Services.

Appendix

Application Forms and Instructions

Applicants are advised to reproduce and complete the application forms in this section. Applicants are required to submit an original and two copies of each application as provided in this section.

Common Questions and Answers

While we have always made every effort to make our application materials as clear and complete as possible, a major task of Division of Personnel Preparation staff from the date of the program announcement to the closing date is answering phone and mail requests with further questions. The next several pages list some of the most common issues raised by potential applicants in interpreting our regulations and application instructions.

The following issues are not hypothetical. They represent concerns repeatedly raised, even though in many cases they are answered in the regulations or application instructions. The problem seems to be that the issues are not sufficiently highlighted, or that they are disguised by the formal language of legislative documents. These issues and general responses are listed in approximately the frequency of occurrence.

• Extension of deadlines.

Waivers for individual applications are not granted, regardless of the circumstances. Under very extraordinary circumstances a closing date may be changed. Such changes are announced in the **Federal Register** and apply to all applications.

• Copies of the application.

Current Government-wide policy is that only an original and two copies need to be submitted. Division staff duplicate the two additional copies necessary to complete the review process by staff and peer readers. It is not required that applications be bound, though they may be if you wish. However, to facilitate our reproduction, please leave one copy unbound. Also, please do not use colored paper, foldouts, photographs, or other hard to duplicate materials. Some applicants prefer to make their own additional copies. If you do so, there is no need to submit more than two additional copies, as that is all that will be required for the review process.

• Help preparing applications.

We are happy to provide general program information. Clearly it would not be appropriate for staff to participate in the actual writing of an application, but we can respond to specific questions about our application requirements and evaluation criteria, or about the announced priority. Applicants should understand that such previous contact is not required, nor does it guarantee the success of an application.

• Notification of funding.

The time required to complete the evaluation of applications is extremely variable. Once applications have been received staff must determine the areas of expertise needed to appropriately evaluate the applications, identify and contact potential reviewers, convene peer review panels, and summarize and review the recommendations of the review panels. You can expect to receive notification within 4 to 6 months of the application closing date. The requested start date should therefore be a minimum of 6 months after the closing date.

• Possibility of learning the outcome of review panels prior to official notification.

Every year we are called by a number of applicants who have really legitimate reasons for needing to know the outcome of the review prior to official notification. Some applicants need to make job decisions, etc. Regardless of the reason, we cannot share information about the review with anyone prior to officially completing the review process for a competition, nor can we tell you when you will be notified. Please do not call us and ask us for this information. You will be notified as quickly as possible either by a grant negotiator (if your application is recommended for funding) or through a letter to the certifying representative (if your application is not successful).

• Length of application.

The Department of Education is making a concerted effort to reduce the volume of paper work in applications to discretionary programs. The following suggestions should assist applicants to prepare applications which will convey

the information necessary for the review and selection process, and also save America's forests, professional time and energy. The scope and complexity of projects are too variable to establish firm limits on length. Your application should provide enough information to allow the review panel to evaluate the importance and impact of the project as well as to make knowledgeable judgments about the methods you propose to use (design, subjects, sampling procedures, measures, instruments, data analysis strategies, etc.).

Many applications include voluminous appended material. In most cases this material is not useful in the evaluation process. Very few projects require much supporting material. However, it is often helpful to have:

(1) *Staff Vitae*—when these include each person's title and role in the proposed project and contain only information that is relevant to this proposed project's activities and/or publications. Vitae for consultants and Advisory Council members should be similarly brief.

(2) *Instruments*—except in the case of generally available and well known instruments.

(3) *Agreements*—when the participation of an agency other than the applicant is critical when an intervention will be implemented within an agency, or when subjects will be drawn from particular agencies. Letters of cooperation should be specific, indicating agreement to implement a particular intervention or to provide access to a particular group. General letters of support are not useful. Except for the three items noted above, most appendix material is rarely useful. Typical extraneous materials include:

(1) Related project descriptions completed by applicant.

(2) Maps.

(3) State plans.

(4) Brochures.

(5) Copies of publications.

• Use of Person Loading Charts.

Program officials and applicants often find person loading charts useful formats for showing project personnel and their time commitments to individual activities. A person loading chart is a tabular representation of major activities by number of days spent by each person involved in each activity, as shown in the following example.

Table # Person Loading Chart

Activity	Time in day(s) by person*			
	Person A	Person B	Person C	Person D
Program Development	15	20	0	0
Mentoring	0	0	0	5
Research	5	25	0	0
Information Services	0	2	0	0
Dissemination (manuscripts, ets.)	0	1	20	10

*Note: All figures represent FTE for the academic year.

• Return of non-funded applications.

Because of budget restrictions, we are no longer able to return original copies of applications. Thus, applicants should retain at least one copy of the application. Copies of reviewer comments will be mailed to all applicants.

• Delivering/sending applications to the competition manager.

Applications can be mailed or hand delivered, but in either case must go to the Application Control Center at the address listed in the Mailing Instructions in this packet. Delivering/sending the application to the competition manager in the program office may prevent it from being logged in on time to the appropriate competition.

• Format for applications.

Applications are more likely to receive favorable reviews by panels when they are organized according to the published evaluation criteria. If you prefer to use a different format you may wish to cross-reference the sections of your application to the evaluation criteria to be sure that reviewers are able to find all relevant information.

• Allowed travel under these projects.

Travel associated with carrying out the project is allowed (i.e. travel for data collection, etc.). Travel to conferences is the travel item that is most likely to be questioned during negotiations. Such travel is sometimes allowed when it is for purposes of dissemination, when there will be results to be disseminated, and when it is clear that a conference presentation or workshop is an effective way of reaching a particular target group.

• Funding of Approved Applications.

It is often the case that the number of applications recommended for approval by the reviewers exceeds the dollars available for funding projects under a particular competition. When the panel reviews are completed for a particular competition, the individual reviewer scores and applications are ranked. The higher ranked, approved applications are funded first, and there are often lower ranked, approved applications that do not receive funding. Sometimes the one or two applications that are approved and fall next in rank order (after the projects selected for funding) are placed on hold. If dollars are freed up during negotiations or if a higher ranked applicant declines the award, the projects on hold may receive funding. If you receive a letter stating that you will not receive funding then your project has neither been selected for funding nor placed on hold.

• Issues raised during negotiations.

During negotiations technical and budget issues may be raised. These are issues that have been identified during panel and staff review. Generally, technical issues are minor issues that require clarification. Alternative approaches may be presented for your consideration, or you may be asked to provide additional information or rationale for something you have proposed to do. Sometimes issues are stated as "conditions". These are issues that have been identified as so critical that the award cannot be made unless those conditions are met. Questions are also raised about the proposed budget during the negotiation phase. Generally, budget issues are raised because there is inadequate justification or explanation of the particular budget item, or because the budget item does not seem important to the successful completion of the project. The grants negotiator will present the negotiation questions or issues to you and ask you to respond. If you do not understand the question, you should ask for clarification. In responding to negotiation items you should provide any additional information or clarification requested. You may feel that an issue was addressed in the application. It may not, however, have been explained in enough detail to make it understood by reviewers, and more information should be provided. If you are asked to make changes that you feel could seriously affect the project's success you may provide reasons for not making the changes or provide alternative suggestions. Similarly, if proposed budget reductions will, in your opinion, seriously affect the activities you may want to explain why and provide additional justification for the proposed expenses. Your changes, explanations, and alternate suggestions will be carefully evaluated by staff. In some instances additional negotiations or follow-up information may be needed. In such instances you will again be contacted by the grants negotiator. An

award cannot be made until all negotiation issues have been resolved.

• Successful applications and estimated/projected budget amounts in subsequent years.

In this era of budget deficits and need for cost containment, a conservative policy toward current and out-year budget expenditures is necessary. Projects will not be funded in excess of the amount listed in the **Federal Register** announcement. Any project approved by the reviewers that exceeds the estimated size of award will be required to be performed within the announced amount. The budget estimates that you provide in your application for out-year costs are critical for planning purposes, but they in no way represent a commitment by the Department to a particular level of funding in subsequent years. Budget modifications during the negotiation process, the findings from the initial year, or needed changes in the research design can affect your budget requirements in subsequent years. However, keep in mind that multi-year projects are likely to be level funded unless there are increases in costs attributable to significant changes in activity level. Grantees having multi-year projects will be asked to submit a continuation application and a detailed budget request prior to each year of the project.

• Difference between a cooperative agreement and a grant. A cooperative agreement is similar to a grant in that its principal purpose is to accomplish a public purpose of support or stimulation as authorized by a Federal statute. It differs from a grant in the sense that in a cooperative agreement substantial involvement is anticipated between the executive agency (in this case the Department of Education) and the recipient during the performance of the contemplated activity.

• Obtaining copies of the **Federal Register**, program regulations and federal statutes. Copies of these materials can usually be found at your local library. If not, they can be obtained from the Government Printing Office by writing to: Superintendent of Documents, U.S. Government Printing Office, Washington, DC 20402. Telephone: (202) 783–3238.

Application Narrative and Instructions

Applications are more likely to receive favorable reviews by panels when they are organized according to the published evaluation criteria found elsewhere in this packet. If you prefer to use a different format you may wish to cross-reference the sections of your application to the evaluation criteria to ensure that reviewers are able to find all relevant information.

The following is a suggested format you may wish to use in preparing your application. This suggested format is advisory only, since the scope and complexity of projects is too variable to establish firm limits on length and format. In your application you may wish to include the following features in the order listed below:

(a) An abstract of the project;

(b) The extent the project meets the purposes of the authorizing statute;

(c) The extent the project meets specific needs recognized in the statute that authorizes the program;

(d) The plan of operation which the applicant proposes to use to administer the project;

(d) The quality of key personnel to be used to achieve each objective;

(f) Budget and cost effectiveness to achieve the proposed activity;

(g) The evaluation plan to evaluate the project; and

(h) The adequacy of resources available and needed to achieve each objective.

BILLING CODE 4000-01-M

OMB Approval No. 0348-0043

APPLICATION FOR FEDERAL ASSISTANCE

1. TYPE OF SUBMISSION: Application ☐ Construction ☐ Non-Construction; Preapplication ☐ Construction ☐ Non-Construction	2. DATE SUBMITTED	Applicant Identifier
	3. DATE RECEIVED BY STATE	State Application Identifier
	4. DATE RECEIVED BY FEDERAL AGENCY	Federal Identifier

5. APPLICANT INFORMATION

Legal Name:	Organizational Unit:
Address (give city, county, state, and zip code):	Name and telephone number of the person to be contacted on matters involving this application (give area code):

6. EMPLOYER IDENTIFICATION NUMBER (EIN): ☐☐ – ☐☐☐☐☐☐☐

7. TYPE OF APPLICANT: (enter appropriate letter in box) ☐

A. State
B. County
C. Municipal
D. Township
E. Interstate
F. Intermunicipal
G. Special District
H. Independent School Dist.
I. State Controlled Institution of Higher Learning
J. Private University
K. Indian Tribe
L. Individual
M. Profit Organization
N. Other (Specify) _____

8. TYPE OF APPLICATION:

☐ New ☐ Continuation ☐ Revision

If Revision, enter appropriate letter(s) in box(es) ☐ ☐

A. Increase Award B. Decrease Award C. Increase Duration
D. Decrease Duration Other (specify): _____

9. NAME OF FEDERAL AGENCY:

10. CATALOG OF FEDERAL DOMESTIC ASSISTANCE NUMBER: ☐☐ . ☐☐☐

TITLE:

11. DESCRIPTIVE TITLE OF APPLICANT'S PROJECT:

12. AREAS AFFECTED BY PROJECT (cities, counties, states, etc.)

13. PROPOSED PROJECT		14. CONGRESSIONAL DISTRICTS OF	
Start Date	Ending Date	a. Applicant	b. Project

15. ESTIMATED FUNDING:	
a. Federal	$ .00
b. Applicant	$ .00
c. State	$ .00
d. Local	$ .00
e. Other	$ .00
f. Program Income	$ .00
g. TOTAL	$ .00

16. IS APPLICATION SUBJECT TO REVIEW BY STATE EXECUTIVE ORDER 12372 PROCESS?

a. YES THIS PREAPPLICATION/APPLICATION WAS MADE AVAILABLE TO THE STATE EXECUTIVE ORDER 12372 PROCESS FOR REVIEW ON

DATE _____

b. NO ☐ PROGRAM IS NOT COVERED BY E.O. 12372

☐ OR PROGRAM HAS NOT BEEN SELECTED BY STATE FOR REVIEW

17. IS THE APPLICANT DELINQUENT ON ANY FEDERAL DEBT?

☐ Yes If "Yes," attach an explanation. ☐ No

18. TO THE BEST OF MY KNOWLEDGE AND BELIEF, ALL DATA IN THIS APPLICATION/PREAPPLICATION ARE TRUE AND CORRECT. THE DOCUMENT HAS BEEN DULY AUTHORIZED BY THE GOVERNING BODY OF THE APPLICANT AND THE APPLICANT WILL COMPLY WITH THE ATTACHED ASSURANCES IF THE ASSISTANCE IS AWARDED

a. Typed Name of Authorized Representative	b. Title	c. Telephone number
d. Signature of Authorized Representative		e. Date Signed

Previous Editions Not Usable

Standard Form 424 (REV 4-88)
Prescribed by OMB Circular A-102

Authorized for Local Reproduction

INSTRUCTIONS FOR THE SF 424

This is a standard form used by applicants as a required facesheet for preapplications and applications submitted for Federal assistance. It will be used by Federal agencies to obtain applicant certification that States which have established a review and comment procedure in response to Executive Order 12372 and have selected the program to be included in their process, have been given an opportunity to review the applicant's submission.

Item: Entry:

1. Self-explanatory.
2. Date application submitted to Federal agency (or State if applicable) & applicant's control number (if applicable).
3. State use only (if applicable).
4. If this application is to continue or revise an existing award, enter present Federal identifier number. If for a new project, leave blank.
5. Legal name of applicant, name of primary organizational unit which will undertake the assistance activity, complete address of the applicant, and name and telephone number of the person to contact on matters related to this application.
6. Enter Employer Identification Number (EIN) as assigned by the Internal Revenue Service.
7. Enter the appropriate letter in the space provided.
8. Check appropriate box and enter appropriate letter(s) in the space(s) provided:
   - "New" means a new assistance award.
   - "Continuation" means an extension for an additional funding/budget period for a project with a projected completion date.
   - "Revision" means any change in the Federal Government's financial obligation or contingent liability from an existing obligation.
9. Name of Federal agency from which assistance is being requested with this application.
10. Use the Catalog of Federal Domestic Assistance number and title of the program under which assistance is requested.
11. Enter a brief descriptive title of the project. If more than one program is involved, you should append an explanation on a separate sheet. If appropriate (e.g., construction or real property projects), attach a map showing project location. For preapplications, use a separate sheet to provide a summary description of this project.

Item: Entry:

12. List only the largest political entities affected (e.g., State, counties, cities).
13. Self-explanatory.
14. List the applicant's Congressional District and any District(s) affected by the program or project
15. Amount requested or to be contributed during the first funding/budget period by each contributor. Value of in-kind contributions should be included on appropriate lines as applicable. If the action will result in a dollar change to an existing award, indicate *only* the amount of the change. For decreases, enclose the amounts in parentheses. If both basic and supplemental amounts are included, show breakdown on an attached sheet. For multiple program funding, use totals and show breakdown using same categories as item 15.
16. Applicants should contact the State Single Point of Contact (SPOC) for Federal Executive Order 12372 to determine whether the application is subject to the State intergovernmental review process.
17. This question applies to the applicant organization, not the person who signs as the authorized representative. Categories of debt include delinquent audit disallowances, loans and taxes.
18. To be signed by the authorized representative of the applicant. A copy of the governing body's authorization for you to sign this application as official representative must be on file in the applicant's office. (Certain Federal agencies may require that this authorization be submitted as part of the application.)

OMB Approval No. 0348-0044

BUDGET INFORMATION — Non-Construction Programs

SECTION A – BUDGET SUMMARY

Grant Program Function or Activity (a)	Catalog of Federal Domestic Assistance Number (b)	Estimated Unobligated Funds		New or Revised Budget		
		Federal (c)	Non-Federal (d)	Federal (e)	Non-Federal (f)	Total (g)
1.		$	$	$	$	$
2.						
3.						
4.						
5. TOTALS		$	$	$	$	$

SECTION B – BUDGET CATEGORIES

6 Object Class Categories	GRANT PROGRAM, FUNCTION OR ACTIVITY				Total (5)
	(1)	(2)	(3)	(4)	
a. Personnel	$	$	$	$	$
b. Fringe Benefits					
c. Travel					
d. Equipment					
e. Supplies					
f. Contractual					
g. Construction					
h. Other					
i. Total Direct Charges (sum of 6a - 6h)					
j. Indirect Charges					
k. TOTALS (sum of 6i and 6j)	$	$	$	$	$
7. Program Income	$	$	$	$	$

Authorized for Local Reproduction

Standard Form 424A (4-88)
Prescribed by OMB Circular A-102

SECTION C - NON-FEDERAL RESOURCES

(a) Grant Program	(b) Applicant	(c) State	(d) Other Sources	(e) TOTALS
8.	$	$	$	$
9.				
10.				
11.				
12. TOTALS (sum of lines 8 and 11)	$	$	$	$

SECTION D - FORECASTED CASH NEEDS

	Total for 1st Year	1st Quarter	2nd Quarter	3rd Quarter	4th Quarter
13. Federal	$	$	$	$	$
14. NonFederal					
15. TOTAL (sum of lines 13 and 14)	$	$	$	$	$

SECTION E - BUDGET ESTIMATES OF FEDERAL FUNDS NEEDED FOR BALANCE OF THE PROJECT

(a) Grant Program	FUTURE FUNDING PERIODS (Years)			
	(b) First	(c) Second	(d) Third	(e) Fourth
16.	$	$	$	$
17.				
18.				
19.				
20. TOTALS (sum of lines 16 -19)	$	$	$	$

SECTION F - OTHER BUDGET INFORMATION

(Attach additional Sheets if Necessary)

21. Direct Charges:	22. Indirect Charges:

23. Remarks

SF 424A (4-88) Page 2
Prescribed by OMB Circular A-102

Authorized for Local Reproduction

INSTRUCTIONS FOR THE SF-424A

General Instructions

This form is designed so that application can be made for funds from one or more grant programs. In preparing the budget, adhere to any existing Federal grantor agency guidelines which prescribe how and whether budgeted amounts should be separately shown for different functions or activities within the program. For some programs, grantor agencies may require budgets to be separately shown by function or activity. For other programs, grantor agencies may require a breakdown by function or activity. Sections A,B,C, and D should include budget estimates for the whole project except when applying for assistance which requires Federal authorization in annual or other funding period increments. In the latter case, Sections A,B, C, and D should provide the budget for the first budget period (usually a year) and Section E should present the need for Federal assistance in the subsequent budget periods. All applications should contain a breakdown by the object class categories shown in Lines a-k of Section B.

Section A. Budget Summary
Lines 1-4, Columns (a) and (b)

For applications pertaining to a *single* Federal grant program (Federal Domestic Assistance Catalog number) and *not requiring* a functional or activity breakdown, enter on Line 1 under Column (a) the catalog program title and the catalog number in Column (b).

For applications pertaining to a *single* program *requiring* budget amounts by multiple functions or activities, enter the name of each activity or function on each line in Column (a), and enter the catalog number in Column (b). For applications pertaining to multiple programs where none of the programs require a breakdown by function or activity, enter the catalog program title on each line in *Column* (a) and the respective catalog number on each line in Column (b).

For applications pertaining to *multiple* programs where one or more programs *require* a breakdown by function or activity, prepare a separate sheet for each program requiring the breakdown. Additional sheets should be used when one form does not provide adequate space for all breakdown of data required. However, when more than one sheet is used, the first page should provide the summary totals by programs.

Lines 1-4, Columns (c) through (g.)

For new applications, leave Columns (c) and (d) blank. For each line entry in Columns (a) and (b), enter in Columns (e), (f), and (g) the appropriate amounts of funds needed to support the project for the first funding period (usually a year).

Lines 1-4, Columns (c) through (g.) (continued)

For continuing grant program applications, submit these forms before the end of each funding period as required by the grantor agency. Enter in Columns (c) and (d) the estimated amounts of funds which will remain unobligated at the end of the grant funding period only if the Federal grantor agency instructions provide for this. Otherwise, leave these columns blank. Enter in columns (e) and (f) the amounts of funds needed for the upcoming period. The amount(s) in Column (g) should be the sum of amounts in Columns (e) and (f).

For supplemental grants and changes to existing grants, do not use Columns (c) and (d). Enter in Column (e) the amount of the increase or decrease of Federal funds and enter in Column (f) the amount of the increase or decrease of non-Federal funds. In Column (g) enter the new total budgeted amount (Federal and non-Federal) which includes the total previous authorized budgeted amounts plus or minus, as appropriate, the amounts shown in Columns (e) and (f). The amount(s) in Column (g) should not equal the sum of amounts in Columns (e) and (f).

Line 5 — Show the totals for all columns used.

Section B Budget Categories

In the column headings (1) through (4), enter the titles of the same programs, functions, and activities shown on Lines 1-4, Column (a), Section A. When additional sheets are prepared for Section A, provide similar column headings on each sheet. For each program, function or activity, fill in the total requirements for funds (both Federal and non-Federal) by object class categories.

Lines 6a-i — Show the totals of Lines 6a to 6h in each column.

Line 6j - Show the amount of indirect cost.

Line 6k - Enter the total of amounts on Lines 6i and 6j. For all applications for new grants and continuation grants the total amount in column (5), Line 6k, should be the same as the total amount shown in Section A, Column (g), Line 5. For supplemental grants and changes to grants, the total amount of the increase or decrease as shown in Columns (1)-(4), Line 6k should be the same as the sum of the amounts in Section A, Columns (e) and (f) on Line 5.

INSTRUCTIONS FOR THE SF-424A *(continued)*

Line 7 – Enter the estimated amount of income, if any, expected to be generated from this project. Do not add or subtract this amount from the total project amount. Show under the program narrative statement the nature and source of income. The estimated amount of program income may be considered by the federal grantor agency in determining the total amount of the grant.

Section C. Non-Federal-Resources

Lines 8-11 – Enter amounts of non-Federal resources that will be used on the grant. If in-kind contributions are included, provide a brief explanation on a separate sheet.

Column (a) – Enter the program titles identical to Column (a), Section A. A breakdown by function or activity is not necessary.

Column (b) – Enter the contribution to be made by the applicant.

Column (c) – Enter the amount of the State's cash and in-kind contribution if the applicant is not a State or State agency. Applicants which are a State or State agencies should leave this column blank.

Column (d) – Enter the amount of cash and in-kind contributions to be made from all other sources.

Column (e) – Enter totals of Columns (b), (c), and (d).

Line 12 — Enter the total for each of Columns (b)-(e). The amount in Column (e) should be equal to the amount on Line 5, Column (f), Section A.

Section D Forecasted Cash Needs

Line 13 – Enter the amount of cash needed by quarter from the grantor agency during the first year.

Line 14 – Enter the amount of cash from all other sources needed by quarter during the first year.

Line 15 – Enter the totals of amounts on Lines 13 and 14.

Section E. Budget Estimates of Federal Funds Needed for Balance of the Project

Lines 16 - 19 – Enter in Column (a) the same grant program titles shown in Column (a), Section A. A breakdown by function or activity is not necessary. For new applications and continuation grant applications, enter in the proper columns amounts of Federal funds which will be needed to complete the program or project over the succeeding funding periods (usually in years). This section need not be completed for revisions (amendments, changes, or supplements) to funds for the current year of existing grants.

If more than four lines are needed to list the program titles, submit additional schedules as necessary.

Line 20 – Enter the total for each of the Columns (b)-(e) When additional schedules are prepared for this Section, annotate accordingly and show the overall totals on this line.

Section F. Other Budget Information

Line 21 – Use this space to explain amounts for individual direct object-class cost categories that may appear to be out of the ordinary or to explain the details as required by the Federal grantor agency.

Line 22 – Enter the type of indirect rate (provisional, predetermined, final or fixed) that will be in effect during the funding period, the estimated amount of the base to which the rate is applied, and the total indirect expense.

Line 23 – Provide any other explanations or comments deemed necessary.

BILLING CODE 4000-01-C

Instructions for Estimated Public Reporting Burden

Under terms of the Paperwork Reduction Act of 1980, as amended, and the regulations implementing that Act, the Department of Education invited comment on the public reporting burden in this collection of information. Public reporting burden for this collection of information is estimated to average 36 hours per response, including the time for reviewing instructions, searching existing data sources, gathering and maintaining the data needed, and completing and reviewing the collection of information. You may send comments regarding this burden estimate or any other aspect of this collection of the information, including suggestions for reducing burden, to the U.S. Department of Education, Information Management and Compliance Division, Washington, DC 20202–4651; and to the Office of Management and Budget, Paperwork Reduction Project 1820–0028, Washington, DC 20503.

(Information collection approved under OMB Control number 1820–0028. Expiration date: 1/95)

BILLING CODE 4000-01-M

OMB Approval No. 0348-0040

ASSURANCES — NON-CONSTRUCTION PROGRAMS

Note: Certain of these assurances may not be applicable to your project or program. If you have questions, please contact the awarding agency. Further, certain Federal awarding agencies may require applicants to certify to additional assurances. If such is the case, you will be notified.

As the duly authorized representative of the applicant I certify that the applicant:

1. Has the legal authority to apply for Federal assistance, and the institutional, managerial and financial capability (including funds sufficient to pay the non-Federal share of project costs) to ensure proper planning, management and completion of the project described in this application.

2. Will give the awarding agency, the Comptroller General of the United States, and if appropriate, the State, through any authorized representative, access to and the right to examine all records, books, papers, or documents related to the award; and will establish a proper accounting system in accordance with generally accepted accounting standards or agency directives.

3. Will establish safeguards to prohibit employees from using their positions for a purpose that constitutes or presents the appearance of personal or organizational conflict of interest, or personal gain.

4. Will initiate and complete the work within the applicable time frame after receipt of approval of the awarding agency.

5. Will comply with the Intergovernmental Personnel Act of 1970 (42 U.S.C. §§ 4728-4763) relating to prescribed standards for merit systems for programs funded under one of the nineteen statutes or regulations specified in Appendix A of OPM's Standards for a Merit System of Personnel Administration (5 C.F.R. 900, Subpart F).

6. Will comply with all Federal statutes relating to nondiscrimination. These include but are not limited to: (a) Title VI of the Civil Rights Act of 1964 (P.L. 88-352) which prohibits discrimination on the basis of race, color or national origin; (b) Title IX of the Education Amendments of 1972, as amended (20 U.S.C. §§ 1681-1683, and 1685-1686), which prohibits discrimination on the basis of sex; (c) Section 504 of the Rehabilitation Act of 1973, as amended (29 U.S.C. § 794), which prohibits discrimination on the basis of handicaps; (d) the Age Discrimination Act of 1975, as amended (42 U.S.C.§§ 6101-6107), which prohibits discrimination on the basis of age; (e) the Drug Abuse Office and Treatment Act of 1972 (P.L. 92-255), as amended, relating to nondiscrimination on the basis of drug abuse; (f) the Comprehensive Alcohol Abuse and Alcoholism Prevention, Treatment and Rehabilitation Act of 1970 (P.L. 91-616), as amended, relating to nondiscrimination on the basis of alcohol abuse or alcoholism; (g) §§ 523 and 527 of the Public Health Service Act of 1912 (42 U.S.C. 290 dd-3 and 290 ee-3), as amended, relating to confidentiality of alcohol and drug abuse patient records; (h) Title VIII of the Civil Rights Act of 1968 (42 U.S.C. § 3601 et seq.), as amended, relating to nondiscrimination in the sale, rental or financing of housing; (i) any other nondiscrimination provisions in the specific statute(s) under which application for Federal assistance is being made; and (j) the requirements of any other nondiscrimination statute(s) which may apply to the application.

7. Will comply, or has already complied, with the requirements of Titles II and III of the Uniform Relocation Assistance and Real Property Acquisition Policies Act of 1970 (P.L. 91-646) which provide for fair and equitable treatment of persons displaced or whose property is acquired as a result of Federal or federally assisted programs. These requirements apply to all interests in real property acquired for project purposes regardless of Federal participation in purchases.

8. Will comply with the provisions of the Hatch Act (5 U.S.C. §§ 1501-1508 and 7324-7328) which limit the political activities of employees whose principal employment activities are funded in whole or in part with Federal funds.

9. Will comply, as applicable, with the provisions of the Davis-Bacon Act (40 U.S.C. §§ 276a to 276a-7), the Copeland Act (40 U.S.C. § 276c and 18 U.S.C. §§ 874), and the Contract Work Hours and Safety Standards Act (40 U.S.C. §§ 327-333), regarding labor standards for federally assisted construction subagreements.

Standard Form 424B (4-88)
Prescribed by OMB Circular A-102

Authorized for Local Reproduction

10. Will comply, if applicable, with flood insurance purchase requirements of Section 102(a) of the Flood Disaster Protection Act of 1973 (P.L. 93-234) which requires recipients in a special flood hazard area to participate in the program andto purchase flood insurance if the total cost of insurable construction and acquisition is $10,000 or more.

11. Will comply with environmental standards which may be prescribed pursuant to the following: (a) institution of environmental quality control measures under the National Environmental Policy Act of 1969 (P.L. 91-190) and Executive Order (EO) 11514; (b) notification of violating facilities pursuant to EO 11738; (c) protection of wetlands pursuant to EO 11990; (d) evaluation of flood hazards in floodplains in accordance with EO 11988, (e) assurance of project consistency with the approved State management program developed under the Coastal Zone Management Act of 1972 (16 U.S.C. §§ 1451 et seq.); (f) conformity of Federal actions to State (Clear Air) Implementation Plans under Section 176(c) of the Clear Air Act of 1955, as amended (42 U.S.C. § 7401 et seq.); (g) protection of underground sources of drinking water under the Safe Drinking Water Act of 1974, as amended, (P.L. 93-523); and (h) protection of endangered species under the Endangered Species Act of 1973, as amended, (P.L. 93-205).

12. Will comply with the Wild and Scenic Rivers Act of 1968 (16 U.S.C. §§ 1271 et seq.) related to protecting components or potential components of the national wild and scenic rivers system.

13. Will assist the awarding agency in assuring compliance with Section 106 of the National Historic Preservation Act of 1966, as amended (16 U S.C. 470), EO 11593 (identification and protection of historic properties), and the Archaeological and Historic Preservation Act of 1974 (16 U.S.C. 469a-1 et seq.).

14. Will comply with P.L. 93-348 regarding the protection of human subjects involved in research, development, and related activities supported by this award of assistance.

15. Will comply with the Laboratory Animal Welfare Act of 1966 (P.L. 89-544, as amended, 7 U S C. 2131 et seq.) pertaining to the care, handling, and treatment of warm blooded animals held for research, teaching, or other activities supported by this award of assistance.

16. Will comply with the Lead-Based Paint Poisoning Prevention Act (42 U.S.C. §§ 4801 et seq) which prohibits the use of lead based paint in construction or rehabilitation of residence structures.

17. Will cause to be performed the required financial and compliance audits in accordance with the Single Audit Act of 1984.

18. Will comply with all applicable requirements of all other Federal laws, executive orders, regulations and policies governing this program.

SIGNATURE OF AUTHORIZED CERTIFYING OFFICIAL	TITLE

APPLICANT ORGANIZATION	DATE SUBMITTED

SF 424B (4-88) Back

CERTIFICATIONS REGARDING LOBBYING; DEBARMENT, SUSPENSION AND OTHER RESPONSIBILITY MATTERS; AND DRUG-FREE WORKPLACE REQUIREMENTS

Applicants should refer to the regulations cited below to determine the certification to which they are required to attest. Applicants should also review the instructions for certification included in the regulations before completing this form. Signature of this form provides for compliance with certification requirements under 34 CFR Part 82, "New Restrictions on Lobbying," and 34 CFR Part 85, "Government-wide Debarment and Suspension (Nonprocurement) and Government-wide Requirements for Drug-Free Workplace (Grants)." The certifications shall be treated as a material representation of fact upon which reliance will be placed when the Department of Education determines to award the covered transaction, grant, or cooperative agreement.

1. LOBBYING

As required by Section 1352, Title 31 of the U.S. Code, and implemented at 34 CFR Part 82, for persons entering into a grant or cooperative agreement over $100,000, as defined at 34 CFR Part 82, Sections 82.105 and 82.110, the applicant certifies that:

(a) No Federal appropriated funds have been paid or will be paid, by or on behalf of the undersigned, to any person for influencing or attempting to influence an officer or employee of any agency, a Member of Congress, an officer or employee of Congress, or an employee of a Member of Congress in connection with the making of any Federal grant, the entering into of any cooperative agreement, and the extension, continuation, renewal, amendment, or modification of any Federal grant or cooperative agreement;

(b) If any funds other than Federal appropriated funds have been paid or will be paid to any person for influencing or attempting to influence an officer or employee of any agency, a Member of Congress, an officer or employee of Congress, or an employee of a Member of Congress in connection with this Federal grant or cooperative agreement, the undersigned shall complete and submit Standard Form - LLL, "Disclosure Form to Report Lobbying," in accordance with its instructions;

(c) The undersigned shall require that the language of this certification be included in the award documents for all subawards at all tiers (including subgrants, contracts under grants and cooperative agreements, and subcontracts) and that all subrecipients shall certify and disclose accordingly.

2. DEBARMENT, SUSPENSION, AND OTHER RESPONSIBILITY MATTERS

As required by Executive Order 12549, Debarment and Suspension, and implemented at 34 CFR Part 85, for prospective participants in primary covered transactions, as defined at 34 CFR Part 85, Sections 85.105 and 85.110 –

A. The applicant certifies that it and its principals:

(a) Are not presently debarred, suspended, proposed for debarment, declared ineligible, or voluntarily excluded from covered transactions by any Federal department or agency;

(b) Have not within a three-year period preceding this application been convicted of or had a civil judgment rendered against them for commission of fraud or a criminal offense in connection with obtaining, attempting to obtain, or performing a public (Federal, State, or local) transaction or contract under a public transaction; violation of Federal or State antitrust statutes or commission of embezzlement, theft, forgery, bribery, falsification or destruction of records, making false statements, or receiving stolen property;

(c) Are not presently indicted for or otherwise criminally or civilly charged by a governmental entity (Federal, State, or local) with commission of any of the offenses enumerated in paragraph (1)(b) of this certification; and

(d) Have not within a three-year period preceding this application had one or more public transactions (Federal, State, or local) terminated for cause or default; and

B. Where the applicant is unable to certify to any of the statements in this certification, he or she shall attach an explanation to this application.

3. DRUG-FREE WORKPLACE (GRANTEES OTHER THAN INDIVIDUALS)

As required by the Drug-Free Workplace Act of 1988, and implemented at 34 CFR Part 85, Subpart F, for grantees, as defined at 34 CFR Part 85, Sections 85.605 and 85.610 –

A. The applicant certifies that it will or will continue to provide a drug-free workplace by:

(a) Publishing a statement notifying employees that the unlawful manufacture, distribution, dispensing, possession, or use of a controlled substance is prohibited in the grantee's workplace and specifying the actions that will be taken against employees for violation of such prohibition;

(b) Establishing an on-going drug-free awareness program to inform employees about–

(1) The dangers of drug abuse in the workplace;

(2) The grantee's policy of maintaining a drug-free workplace;

(3) Any available drug counseling, rehabilitation, and employee assistance programs; and

(4) The penalties that may be imposed upon employees for drug abuse violations occurring in the workplace;

(c) Making it a requirement that each employee to be engaged in the performance of the grant be given a copy of the statement required by paragraph (a);

(d) Notifying the employee in the statement required by paragraph (a) that, as a condition of employment under the grant, the employee will–

(1) Abide by the terms of the statement; and

(2) Notify the employer in writing of his or her conviction for a violation of a criminal drug statute occurring in the workplace no later than five calendar days after such conviction;

(e) Notifying the agency, in writing, within 10 calendar days after receiving notice under subparagraph (d)(2) from an employee or otherwise receiving actual notice of such conviction. Employers of convicted employees must provide notice, including position title, to: Director, Grants and Contracts Service, U.S. Department of Education, 400 Maryland Avenue, S.W. (Room 3124, GSA Regional Office

Building No. 3), Washington, DC 20202-4571. Notice shall include the identification number(s) of each affected grant;

(f) Taking one of the following actions, within 30 calendar days of receiving notice under subparagraph (d)(2), with respect to any employee who is so convicted—

(1) Taking appropriate personnel action against such an employee, up to and including termination, consistent with the requirements of the Rehabilitation Act of 1973, as amended; or

(2) Requiring such employee to participate satisfactorily in a drug abuse assistance or rehabilitation program approved for such purposes by a Federal, State, or local health, law enforcement, or other appropriate agency;

(g) Making a good faith effort to continue to maintain a drug-free workplace through implementation of paragraphs (a), (b), (c), (d), (e), and (f).

B. The grantee may insert in the space provided below the site(s) for the performance of work done in connection with the specific grant:

Place of Performance (Street address, city, county, state, zip code)

_____

_____

_____

Check ☐ if there are workplaces on file that are not identified here.

DRUG-FREE WORKPLACE (GRANTEES WHO ARE INDIVIDUALS)

As required by the Drug-Free Workplace Act of 1988, and implemented at 34 CFR Part 85, Subpart F, for grantees, as defined at 34 CFR Part 85, Sections 85.605 and 85.610 —

A. As a condition of the grant, I certify that I will not engage in the unlawful manufacture, distribution, dispensing, possession, or use of a controlled substance in conducting any activity with the grant; and

B. If convicted of a criminal drug offense resulting from a violation occurring during the conduct of any grant activity, I will report the conviction, in writing, within 10 calendar days of the conviction, to: Director, Grants and Contracts Service, U.S. Department of Education, 400 Maryland Avenue, S.W. (Room 3124, GSA Regional Office Building No. 3), Washington, DC 20202-4571. Notice shall include the identification number(s) of each affected grant.

As the duly authorized representative of the applicant, I hereby certify that the applicant will comply with the above certifications.

NAME OF APPLICANT	PR/AWARD NUMBER AND/OR PROJECT NAME
PRINTED NAME AND TITLE OF AUTHORIZED REPRESENTATIVE	
SIGNATURE	DATE

ED 80-0013, 6/90 (Replaces ED 80-0008, 12/89; ED Form GCS-008, (REV. 12/88); ED 80-0010, 5/90; and ED 80-0011, 5/90, which are obsolete)

Certification Regarding Debarment, Suspension, Ineligibility and Voluntary Exclusion – Lower Tier Covered Transactions

This certification is required by the Department of Education regulations implementing Executive Order 12549, Debarment and Suspension, 34 CFR Part 85, for all lower tier transactions meeting the threshold and tier requirements stated at Section 85.110.

Instructions for Certification

1. By signing and submitting this proposal, the prospective lower tier participant is providing the certification set out below.

2. The certification in this clause is a material representation of fact upon which reliance was placed when this transaction was entered into. If it is later determined that the prospective lower tier participant knowingly rendered an erroneous certification, in addition to other remedies available to the Federal Government, the department or agency with which this transaction originated may pursue available remedies, including suspension and/or debarment.

3. The prospective lower tier participant shall provide immediate written notice to the person to which this proposal is submitted if at any time the prospective lower tier participant learns that its certification was erroneous when submitted or has become erroneous by reason of changed circumstances.

4. The terms "covered transaction," "debarred," "suspended," "ineligible," "lower tier covered transaction," "participant," "person," "primary covered transaction," "principal," "proposal," and "voluntarily excluded," as used in this clause, have the meanings set out in the Definitions and Coverage sections of rules implementing Executive Order 12549. You may contact the person to which this proposal is submitted for assistance in obtaining a copy of those regulations.

5. The prospective lower tier participant agrees by submitting this proposal that, should the proposed covered transaction be entered into, it shall not knowingly enter into any lower tier covered transaction with a person who is debarred, suspended, declared ineligible, or voluntarily excluded from participation in this covered transaction, unless authorized by the department or agency with which this transaction originated.

6. The prospective lower tier participant further agrees by submitting this proposal that it will include the clause titled "Certification Regarding Debarment, Suspension, Ineligibility, and Voluntary Exclusion–Lower Tier Covered Transactions," without modification, in all lower tier covered transactions and in all solicitations for lower tier covered transactions.

7. A participant in a covered transaction may rely upon a certification of a prospective participant in a lower tier covered transaction that it is not debarred, suspended, ineligible, or voluntarily excluded from the covered transaction, unless it knows that the certification is erroneous. A participant may decide the method and frequency by which it determines the eligibility of its principals. Each participant may, but is not required to, check the Nonprocurement List.

8. Nothing contained in the foregoing shall be construed to require establishment of a system of records in order to render in good faith the certification required by this clause. The knowledge and information of a participant is not required to exceed that which is normally possessed by a prudent person in the ordinary course of business dealings.

9. Except for transactions authorized under paragraph 5 of these instructions, if a participant in a covered transaction knowingly enters into a lower tier covered transaction with a person who is suspended, debarred, ineligible, or voluntarily excluded from participation in this transaction, in addition to other remedies available to the Federal Government, the department or agency with which this transaction originated may pursue available remedies, including suspension and/or debarment.

Certification

(1) The prospective lower tier participant certifies, by submission of this proposal, that neither it nor its principals are presently debarred, suspended, proposed for debarment, declared ineligible, or voluntarily excluded from participation in this transaction by any Federal department or agency.

(2) Where the prospective lower tier participant is unable to certify to any of the statements in this certification, such prospective participant shall attach an explanation to this proposal.

NAME OF APPLICANT	PR/AWARD NUMBER AND/OR PROJECT NAME
PRINTED NAME AND TITLE OF AUTHORIZED REPRESENTATIVE	
SIGNATURE	DATE

ED 80-0014, 9/90 (Replaces GCS-009 (REV. 12/88), which is obsolete)

DISCLOSURE OF LOBBYING ACTIVITIES

Approved by OMB
0346-0046

Complete this form to disclose lobbying activities pursuant to 31 U.S.C. 1352
(See reverse for public burden disclosure.)

1. Type of Federal Action:
☐ a. contract
b. grant
c. cooperative agreement
d. loan
e. loan guarantee
f. loan insurance

2. Status of Federal Action:
☐ a. bid/offer/application
b. initial award
c. post-award

3. Report Type:
☐ a. initial filing
b. material change
For Material Change Only:
year _____ quarter _____
date of last report _____

4. Name and Address of Reporting Entity:
☐ Prime ☐ Subawardee
Tier _____, *if known*:
Congressional District, *if known*:

5. If Reporting Entity in No. 4 is Subawardee, Enter Name and Address of Prime:
Congressional District, *if known*:

6. Federal Department/Agency:

7. Federal Program Name/Description:
CFDA Number, *if applicable*: _____

8. Federal Action Number, *if known*:

9. Award Amount, *if known*:
$

10. a. Name and Address of Lobbying Entity
(if individual, last name, first name, MI):

b. Individuals Performing Services *(including address if different from No. 10a)*
(last name, first name, MI):

(attach Continuation Sheet(s) SF-LLL-A, if necessary)

11. Amount of Payment *(check all that apply)*:
$ _____ ☐ actual ☐ planned

12. Form of Payment *(check all that apply)*:
☐ a. cash
☐ b. in-kind; specify: nature _____
value _____

13. Type of Payment *(check all that apply)*:
☐ a. retainer
☐ b. one-time fee
☐ c. commission
☐ d. contingent fee
☐ e. deferred
☐ f. other; specify: _____

14. Brief Description of Services Performed or to be Performed and Date(s) of Service, including officer(s), employee(s), or Member(s) contacted, for Payment indicated in Item 11:

(attach Continuation Sheet(s) SF-LLL-A, if necessary)

15. Continuation Sheet(s) SF-LLL-A attached: ☐ Yes ☐ No

16. Information requested through this form is authorized by title 31 U.S.C. section 1352. This disclosure of lobbying activities is a material representation of fact upon which reliance was placed by the tier above when this transaction was made or entered into. This disclosure is required pursuant to 31 U.S.C. 1352. This information will be reported to the Congress semi-annually and will be available for public inspection. Any person who fails to file the required disclosure shall be subject to a civil penalty of not less than $10,000 and not more than $100,000 for each such failure.

Signature: _____
Print Name: _____
Title: _____
Telephone No.: _____ Date: _____

Federal Use Only:

Authorized for Local Reproduction
Standard Form - LLL

INSTRUCTIONS FOR COMPLETION OF SF-LLL, DISCLOSURE OF LOBBYING ACTIVITIES

This disclosure form shall be completed by the reporting entity, whether subawardee or prime Federal recipient, at the initiation or receipt of a covered Federal action, or a material change to a previous filing, pursuant to title 31 U.S.C. section 1352. The filing of a form is required for each payment or agreement to make payment to any lobbying entity for influencing or attempting to influence an officer or employee of any agency, a Member of Congress, an officer or employee of Congress, or an employee of a Member of Congress in connection with a covered Federal action. Use the SF-LLL-A Continuation Sheet for additional information if the space on the form is inadequate. Complete all items that apply for both the initial filing and material change report. Refer to the implementing guidance published by the Office of Management and Budget for additional information.

1. Identify the type of covered Federal action for which lobbying activity is and/or has been secured to influence the outcome of a covered Federal action.

2. Identify the status of the covered Federal action.

3. Identify the appropriate classification of this report. If this is a followup report caused by a material change to the information previously reported, enter the year and quarter in which the change occurred. Enter the date of the last previously submitted report by this reporting entity for this covered Federal action.

4. Enter the full name, address, city, state and zip code of the reporting entity. Include Congressional District, if known. Check the appropriate classification of the reporting entity that designates if it is, or expects to be, a prime or subaward recipient. Identify the tier of the subawardee, e.g., the first subawardee of the prime is the 1st tier. Subawards include but are not limited to subcontracts, subgrants and contract awards under grants.

5. If the organization filing the report in item 4 checks "Subawardee", then enter the full name, address, city, state and zip code of the prime Federal recipient. Include Congressional District, if known.

6. Enter the name of the Federal agency making the award or loan commitment. Include at least one organizational level below agency name, if known. For example, Department of Transportation, United States Coast Guard.

7. Enter the Federal program name or description for the covered Federal action (item 1). If known, enter the full Catalog of Federal Domestic Assistance (CFDA) number for grants, cooperative agreements, loans, and loan commitments.

8. Enter the most appropriate Federal identifying number available for the Federal action identified in item 1 (e.g., Request for Proposal (RFP) number; Invitation for Bid (IFB) number; grant announcement number; the contract, grant, or loan award number; the application/proposal control number assigned by the Federal agency). Include prefixes, e.g., "RFP-DE-90-001."

9. For a covered Federal action where there has been an award or loan commitment by the Federal agency, enter the Federal amount of the award/loan commitment for the prime entity identified in item 4 or 5.

10. (a) Enter the full name, address, city, state and zip code of the lobbying entity engaged by the reporting entity identified in item 4 to influence the covered Federal action.

    (b) Enter the full names of the individual(s) performing services, and include full address if different from 10 (a). Enter Last Name, First Name, and Middle Initial (MI).

11. Enter the amount of compensation paid or reasonably expected to be paid by the reporting entity (item 4) to the lobbying entity (item 10). Indicate whether the payment has been made (actual) or will be made (planned). Check all boxes that apply. If this is a material change report, enter the cumulative amount of payment made or planned to be made.

12. Check the appropriate box(es). Check all boxes that apply. If payment is made through an in-kind contribution, specify the nature and value of the in-kind payment.

13. Check the appropriate box(es). Check all boxes that apply. If other, specify nature.

14. Provide a specific and detailed description of the services that the lobbyist has performed, or will be expected to perform, and the date(s) of any services rendered. Include all preparatory and related activity, not just time spent in actual contact with Federal officials. Identify the Federal official(s) or employee(s) contacted or the officer(s), employee(s), or Member(s) of Congress that were contacted.

15. Check whether or not a SF-LLL-A Continuation Sheet(s) is attached.

16. The certifying official shall sign and date the form, print his/her name, title, and telephone number.

Public reporting burden for this collection of information is estimated to average 30 minutes per response, including time for reviewing instructions, searching existing data sources, gathering and maintaining the data needed, and completing and reviewing the collection of information. Send comments regarding the burden estimate or any other aspect of this collection of information, including suggestions for reducing this burden, to the Office of Management and Budget, Paperwork Reduction Project (0348-0046), Washington, D.C. 20503

DISCLOSURE OF LOBBYING ACTIVITIES
CONTINUATION SHEET

Approved by OM
0348-0046

Reporting Entity: _____ Page _____ of _____

Authorized for Local Reproduction
Standard Form - LLL-A

[FR Doc. 92-17475 Filed 7-23-92; 8:45 am]
BILLING CODE 4000-01-C

federal register

Friday
July 24, 1992

Part V

Federal Emergency Management Agency

Guidance for Developing State, Tribal, and Local Radiological Emergency Response Planning and Preparedness for Transportation Accidents (FEMA-REP-5, Revision 1); Notice

FEDERAL EMERGENCY MANAGEMENT AGENCY

Guidance for Developing State, Tribal, and Local Radiological Emergency Response Planning and Preparedness for Transportation Accidents (FEMA-REP-5, Revision 1)

AGENCY: Federal Emergency Management Agency.

ACTION: Notice of Availability of the final edition of a radiological emergency planning and preparedness document for transportation accidents.

SUMMARY: The transportation guidance document, Guidance for Developing State, Tribal, and Local Radiological Emergency Response Planning and Preparedness for Transportation Accidents, FEMA-REP-5, Revision 1, is available for distribution and use. Copies will be distributed to State and local governments by the Federal Emergency Management Agency. This document provides information for Federal, State, Tribal and local governments to use in developing and enhancing their emergency capabilities for responding to transportation accidents involving radioactive materials. This document also provides background information to support the application of the guidance to specific types of jurisdictions and to explain the unique characteristics of transportation accidents. The guidance contained in this document does not represent a Federal regulatory requirement. Its use by State, Tribal and local governments is voluntary. Since this guidance has relevance to both hazardous materials and radiological emergencies, other than those related to transportation of radioactive materials, it is recommended that emergency response planning undertaken with this guidance be closely integrated into comprehensive emergency planning and preparedness.

This document has been developed by the Federal Radiological Preparedness Coordinating Committee's Subcommittee on Transportation Accidents which is co-chaired by the U.S. Department of Transportation and FEMA, with support from the following organizations: Department of Transportation, Environmental Protection Agency, Department of Energy, Western Interstate Energy Board, Southern States Energy Board, Sandia National Laboratories, U.S. Department of Agriculture, Nuclear Regulatory Commission, and Department of Health and Human Services. Although this document is published as a final edition, comments from users of FEMA-REP-5, Revision 1, are welcome.

A copy of this document may be obtained from the Federal Emergency Management Agency, P.O. Box 8181, Washington, DC 20024. Please reference publication number, FEMA-REP-5, Rev. 1, in your request.

EFFECTIVE DATE: This FEMA-REP-5, Revision 1, is effective July 24, 1992.

FOR FURTHER INFORMATION CONTACT: Vern Wingert, Office of Technological Hazards, State and Local Programs and Support, Federal Emergency Management Agency, 500 C Street, SW., Washington, DC 20472.

Dated: July 17, 1992.

Grant C. Peterson,

Associate Director, State and Local Programs and Support.

[FR Doc. 92-17513 Filed 7-23-92; 8:45 am]

BILLING CODE 6718-01-M

federal register

Friday
July 24, 1992

Part VI

Department of the Interior

Bureau of Indian Affairs

Indian Gaming; Notice of Approved Amendment to Tribal-State Compact

DEPARTMENT OF THE INTERIOR

Bureau of Indian Affairs

Indian Gaming; Approved Amendment to Tribal-State Compact

AGENCY: Bureau of Indian Affairs, Interior

ACTION: Notice of approved amendment to Tribal-State Compact.

SUMMARY: Pursuant to 25 U.S.C. 2710, of the Indian Gaming Regulatory Act of 1988 (Pub. L. 100–497), the Secretary of the Interior shall publish, in the **Federal Register**, notice of approved Tribal-State Compacts for the purpose of engaging in Class III (casino) gambling on Indian reservations. The Assistant Secretary—Indian Affairs, Department of the Interior, through his delegated authority has approved the First Amendment to the September Tribal/State Compact for Class III Gaming Between the Tulalip Tribes of Washington and the State of Washington, which was approved on September 25, 1991.

DATES: This action is effective July 24, 1992.

ADDRESSES: Office of Tribal Services, Bureau of Indian Affairs, Department of the Interior, MS 4603 MIB 1849 C Street NW., Washington, DC 20240.

FOR FURTHER INFORMATION CONTACT: Division Chief, Tribal Government Services, Bureau of Indian Affairs, Washington, DC 20240, (202) 208–7446.

SUPPLEMENTARY INFORMATION: This is to give notice of a change to the Tribal-State Compact for Class III Gaming Between the Tulalip Tribes of Washington and the State of Washington, which was published as a notice in the **Federal Register** in 56 FR 50220 on October 3, 1991. Section 9(c) of the Compact is being changed to read 18 U.S.C. instead of 25 U.S.C.

Dated: July 20, 1992.

William D. Bettenberg,

Assistant Secretary—Indian Affairs.

[FR Doc. 92–17569 Filed 7–23–92; 8:45 am]

BILLING CODE 4310–02–M

Reader Aids

Federal Register

Vol. 57, No. 143

Friday, July 24, 1992

INFORMATION AND ASSISTANCE

Federal Register

Index, finding aids & general information	202-523-5227
Public inspection desk	523-5215
Corrections to published documents	523-5237
Document drafting information	523-5237
Machine readable documents	523-3447

Code of Federal Regulations

Index, finding aids & general information	523-5227
Printing schedules	512-1557

Laws

Public Laws Update Service (numbers, dates, etc.)	523-6641
Additional information	523-5230

Presidential Documents

Executive orders and proclamations	523-5230
Public Papers of the Presidents	523-5230
Weekly Compilation of Presidential Documents	523-5230

The United States Government Manual

General information	523-5230

Other Services

Data base and machine readable specifications	523-3447
Guide to Record Retention Requirements	523-3187
Legal staff	523-4534
Privacy Act Compilation	523-3187
Public Laws Update Service (PLUS)	523-6641
TDD for the hearing impaired	523-5229

FEDERAL REGISTER PAGES AND DATES, JULY

29181-29428 1
29429-29628 2
29629-29782 6
29783-30098 7
30099-30378 8
30379-30634 9
30635-30896 10
30897-31088 13
31089-31302 14
31303-31428 15
31429-31628 16
31629-31946 17
31947-32148 20
32149-32412 21
32413-32684 22
32685-32878 23
32879-33096 24

CFR PARTS AFFECTED DURING JULY

At the end of each month, the Office of the Federal Register publishes separately a List of CFR Sections Affected (LSA), which lists parts and sections affected by documents published since the revision date of each title.

1 CFR

51 31947
305 ..... 30101, 32881

3 CFR

Proclamations:
6352 (See USTR Notice of July 9) 30531
6426 (See Notice of July 10) 30726
6447 (See USTR Notice of July 8) 30266
6452 29429
6453 29625
6454 29629
6455 30069
6456 30097
6457 31627
6458 31945
6459 32413
6460 32877

Executive Orders:
12543 (See rule of June 29) 29424
12544 (See rule of June 29) 29424
12722 (See Notice of July 21, 1992) 32875
12724 (See Notice of July 21, 1992) 32875
12735 (See Interim rule of July 7, 1992) 31309
12803 (See Notice of June 18) 28867
12812 32879

Administrative Orders:
Presidential Determinations:
No. 92-34 of June 22, 1992 30099

Notices:
July 21, 1992 32875

4 CFR

22 31272
30 31272

5 CFR

294 32148
351 32665
531 32151
532 ..... 29783, 30635
550 31629
831 ..... 29783, 32153
841 32153
842 32685
843 29783
870 29783
1201 32881

Proposed Rules:
351 31332
591 32183
831 31333
843 31333

7 CFR

301 ..... 31303, 31305, 31947
318 31306
905 ..... 31089, 31235
916 ..... 31090, 31235
917 ..... 31090, 31092
946 30379
948 30380
971 31631
980 30380
981 30382
989 31632
1093 31308
1096 31635
1205 ..... 29181, 29431
1209 31948
1220 ..... 29436, 31094
1430 30987
1435 32155
1955 31636

Proposed Rules:
12 29658
13 31668
51 29449
55 ..... 29660, 32184
56 ..... 29660, 32184
59 ..... 29660, 32184
70 ..... 29660, 32184
318 31130
400 30430
723 31325
800 31668
910 31670
928 31142
987 31670
1421 32454
1427 32454
1703 32184
1942 31462

8 CFR

214 ..... 29193, 31954
242 30898
251 29193
258 29193
274a 31954

9 CFR

77 31429
78 31430
96 29784
98 29193
122 30898
156 30898
327 30635

Proposed Rules:
50 31671

51 ... 29225, 31671
77 ... 31671
78 ... 31671
92 ... 31671
124 ... 30926
145 ... 31563
147 ... 31563
160 ... 30432
161 ... 30432
162 ... 30432
317 ... 31972
381 ... 31972

10 CFR

50 ... 30383
170 ... 32691
171 ... 32691
707 ... 32652
Proposed Rules:
61 ... 32743
605 ... 30171
707 ... 32664
1706 ... 31143

11 CFR

102 ... 31424

12 CFR

4 ... 32415
225 ... 30387
603 ... 32420
1102 ... 31645
1615 ... 32881
1620 ... 32393
Proposed Rules:
Ch. I ... 31336
6 ... 29808
19 ... 29808
34 ... 31594
Ch. II ... 31336
206 ... 31974
208 ... 29226, 31594
225 ... 31594
263 ... 29226
Ch. III ... 31336
308 ... 29662
325 ... 29662
333 ... 30433
362 ... 30435
365 ... 31594
563 ... 31336, 31594
565 ... 29826, 31404
607 ... 31673
618 ... 31673
625 ... 31463

13 CFR

101 ... 30391
121 ... 32889
Proposed Rules:
121 ... 32926

14 CFR

21 ... 31957
23 ... 31957
39 ... 29194-29201, 29785, 30111, 30113, 30392-30534, 31096, 31104, 31431-31443, 31654, 31959
71 ... 30115, 30637-30818, 31960, 31961, 32890
91 ... 30818
97 ... 29442, 29443, 32722, 32724
121 ... 31275
Proposed Rules:
21 ... 31986
29 ... 31986
39 ... 29450-29453, 29681-29684, 29785, 30173, 30176, 30686, 30700, 31341, 31754, 31989, 31992, 32744-32747
61 ... 32680
71 ... 29454, 29455, 29686, 29687, 30178, 30179, 30702, 30932, 31993, 32749
121 ... 32846

15 CFR

6 ... 30115
771 ... 30899, 31658
774 ... 30899
785 ... 31658
799 ... 31309
906 ... 31444
907 ... 31445
928 ... 31105
932 ... 31105
945 ... 31660
Proposed Rules:
921 ... 31926
922 ... 31150

16 CFR

Proposed Rules:
1204 ... 31467
1205 ... 31155

17 CFR

140 ... 29203
145 ... 29203, 31563
240 ... 31445, 32159
249 ... 32159
250 ... 31120
Proposed Rules:
150 ... 31674
229 ... 29582, 31156
230 ... 32458, 32461
239 ... 32461
240 ... 29564, 29582, 32461
249 ... 29564, 32461
250 ... 31156

18 CFR

152 ... 32890
157 ... 29631
271 ... 31123

19 CFR

4 ... 29633, 29634
10 ... 30638
162 ... 30639, 31754
353 ... 30900
355 ... 30900
Proposed Rules:
101 ... 31677
133 ... 30703

20 CFR

404 ... 30116
655 ... 29203, 30640, 32894
Proposed Rules:
404 ... 32926
416 ... 29244, 32926

21 CFR

2 ... 29353
5 ... 29353
10 ... 29353
73 ... 32174
176 ... 31312
177 ... 32421
178 ... 32421
310 ... 29353
314 ... 29353
320 ... 29353
443 ... 29353
510 ... 30641, 31313, 32175
520 ... 32175
524 ... 31314
540 ... 32895
558 ... 35176
807 ... 29354
1308 ... 31126, 32423
Proposed Rules:
Ch. I ... 32185
5 ... 32750
20 ... 32750
101 ... 32058, 32750, 32751
131 ... 32470
Ch. III ... 31160
356 ... 30534
821 ... 31754
1308 ... 32937

22 CFR

41 ... 31446
121 ... 32148
172 ... 32896

23 CFR

Proposed Rules:
140 ... 31467
650 ... 29689
750 ... 31470

24 CFR

25 ... 31048, 31754
50 ... 32106
201 ... 30394
202 ... 31048, 31754
219 ... 32398
574 ... 32106
905 ... 31962
906 ... 31962

25 CFR

Proposed Rules:
515 ... 30346, 30353
519 ... 30346
522 ... 30346
523 ... 30346
524 ... 30346
556 ... 30346
558 ... 30346
571 ... 30384
573 ... 30384
575 ... 30384
577 ... 30384

26 CFR

1 ... 31754
48 ... 32424
602 ... 32424
Proposed Rules:
1 ... 29246, 29851, 30451, 31344
301 ... 29248, 32472, 32473

27 CFR

5 ... 31126
19 ... 32176
47 ... 29787
179 ... 29787
Proposed Rules:
4 ... 29456
20 ... 29763

28 CFR

0 ... 30395, 31314, 32438
20 ... 31315
44 ... 30397

29 CFR

20 ... 31450
506 ... 32894
507 ... 29203, 30640
571 ... 31563
1425 ... 30397
1910 ... 29204-29206
2610 ... 31318
2619 ... 31319
2622 ... 31318
2644 ... 31320
2676 ... 31321
Proposed Rules:
42 ... 32939

30 CFR

946 ... 29788
950 ... 30121
Proposed Rules:
48 ... 29853
75 ... 29853
77 ... 29853
202 ... 31471
914 ... 31161, 31162
935 ... 31163

31 CFR

550 ... 29424

32 CFR

165 ... 29619
169a ... 29206
290 ... 30904
385 ... 32178
706 ... 31451, 31452
Proposed Rules:
165 ... 29618
516 ... 31852

33 CFR

81 ... 29218
100 ... 30403, 30641, 30644
117 ... 30403, 30647
155 ... 29354
161 ... 31660
165 ... 30405, 30648, 31322, 31453, 31663
402 ... 30904
Proposed Rules:
100 ... 30704
110 ... 31471
117 ... 30451, 30647
165 ... 31472
168 ... 30058
334 ... 32474

34 CFR

74 ... 30328
75 ... 30328
76 ... 30328
77 ... 30328
237 ... 30328
263 ... 30328
300 ... 30328
356 ... 30328
562 ... 30328
630 ... 30328
653 ... 30328
654 ... 30328
674 ... 32342

675 ... 32342
676 ... 32342
762 ... 30328
Proposed Rules:
366 ... 30866
668 ... 30826

35 CFR

Proposed Rules:
133 ... 32187

36 CFR

7 ... 29794
327 ... 29218

37 CFR

1 ... 29634, 32439
2 ... 29634
3 ... 29634
Proposed Rules:
1 ... 29248, 31344
10 ... 29248

38 CFR

0 ... 31006
1 ... 31006
2 ... 31006
3 ... 31006
4 ... 31006
6 ... 31006
8 ... 31006
9 ... 31006
10 ... 31006
11 ... 31006
12 ... 31006
13 ... 31006
14 ... 31006
16 ... 31006
17 ... 31006
18 ... 31006
18a ... 31006
18b ... 31006
21 ... 31006
36 ... 31006, 31323
39 ... 31006
41 ... 31006
43 ... 31006
44 ... 31006
45 ... 29798
Proposed Rules:
3 ... 30707

39 CFR

20 ... 30651
111 ... 30794, 32899
233 ... 32726
601 ... 31128
Proposed Rules:
111 ... 32188, 32475
3001 ... 31346

40 CFR

51 ... 32314
52 ... 32314
60 ... 29649, 30654, 32314
61 ... 29649
70 ... 32250
82 ... 31242
86 ... 30054, 30656, 31888
122 ... 33040
123 ... 33040
124 ... 30656
130 ... 33040
141 ... 31776
142 ... 31776
148 ... 31962
164 ... 30656
180 ... 30132, 31324, 31454, 32440
185 ... 32440
261 ... 29220, 30657
265 ... 30657
271 ... 29446, 30905, 32726
712 ... 30771
716 ... 30771
721 ... 31325, 31963, 32441
Proposed Rules:
Ch. I ... 30708, 31473
25 ... 31164
52 ... 31477, 31678, 32191
72 ... 29940
73 ... 29940
80 ... 31165
122 ... 32475
123 ... 33051
180 ... 30132, 30454, 31346, 31479, 32753
185 ... 32753
186 ... 32753
260 ... 31164
261 ... 31164
262 ... 31164
264 ... 31164
268 ... 31164
300 ... 30452

41 CFR

50-201 ... 31566
101-45 ... 29804, 32446
Proposed Rules:
572 ... 31481

42 CFR

Ch. I ... 32447
60 ... 30534
493 ... 31664
Proposed Rules:
412 ... 30301
413 ... 30301

43 CFR

2740 ... 32730
3260 ... 29650
4700 ... 29651
Proposed Rules:
3160 ... 32756
Public Land Orders:
6932 ... 31404
6936 ... 32180
6937 ... 32180

44 CFR

65 ... 32899, 32901
67 ... 32734
Proposed Rules:
67 ... 32939
81 ... 32192
206 ... 29854
362 ... 30455

45 CFR

201 ... 30407
204 ... 30407
205 ... 30132, 30407
206 ... 30132
232 ... 30132, 30407
233 ... 30132, 30407
234 ... 30132
237 ... 30132
301 ... 30407
302 ... 30658
303 ... 29763, 30658, 31235
801 ... 32447
1355 ... 30407
Proposed Rules:
96 ... 31682

46 CFR

16 ... 31274
Proposed Rules:
174 ... 32624
586 ... 29259, 30182

47 CFR

1 ... 32180
73 ... 29654, 29655, 29805, 29806, 31664, 31665, 31970, 31971
90 ... 32448, 32450
97 ... 32735
Proposed Rules:
22 ... 29260, 30189
65 ... 31994
69 ... 31994
73 ... 29691, 29805, 29806, 31691, 31692, 31996, 32499
97 ... 30456

48 CFR

223 ... 32736
252 ... 32736
909 ... 32674
923 ... 32674
970 ... 32674
1804 ... 30908
1834 ... 30909
1852 ... 30908
Ch. 20 ... 29220
Proposed Rules:
31 ... 32768
52 ... 32768
223 ... 32769
228 ... 29269
232 ... 29269
252 ... 29269, 32769
1832 ... 30933
1852 ... 30933

49 CFR

107 ... 30620
171 ... 30620
199 ... 31279
214 ... 29561, 30429
219 ... 31278
245 ... 30596
383 ... 31454
391 ... 31277, 31458
571 ... 30161, 30911, 30917, 31563, 32738, 32902
586 ... 30917
Ch. VI ... 30880
1057 ... 32905
1109 ... 32451
1201 ... 31754
Proposed Rules:
71 ... 29270
396 ... 29457
552 ... 29459, 31348
571 ... 30189, 32942
1037 ... 31488
1039 ... 30709, 31489
1180 ... 31165, 31693

50 CFR

17 ... 30164
260 ... 30923
285 ... 29655, 32905
630 ... 29447, 32453
649 ... 30684
655 ... 32923
658 ... 29447
661 ... 31666, 32741, 32924
663 ... 32181, 32924
672 ... 29222, 29223, 29806, 30168, 30685, 30924, 31331, 31971, 32453
675 ... 29223, 29656, 29806, 29807, 30924, 31129, 32925
Proposed Rules:
14 ... 30457
16 ... 29856
17 ... 30191, 31168
20 ... 30884
217 ... 30196, 30709
222 ... 30709
227 ... 30196, 30709
603 ... 30458
611 ... 29692, 29856, 32952
640 ... 32956
663 ... 30534, 32499
672 ... 31563
675 ... 31563
678 ... 29859
685 ... 29692, 32952

LIST OF PUBLIC LAWS

This is a continuing list of public bills from the current session of Congress which have become Federal laws. It may be used in conjunction with "P L U S" (Public Laws Update Service) on 202-523-6641. The text of laws is not published in the **Federal Register** but may be ordered in individual pamphlet form (referred to as "slip laws") from the Superintendent of Documents, U.S. Government Printing Office, Washington, DC 20402 (phone, 202-512-2470).

H.R. 5412/P.L. 102-322

To authorize the transfer of certain naval vessels to Greece and Taiwan. (July 19, 1992; 106 Stat. 443; 2 pages) Price: $1.00

S.J. Res. 324/P.L. 102-323

To commend the NASA Langley Research Center on the celebration of its 75th anniversary on July 17, 1992. (July 20, 1992; 106 Stat. 445; 2 pages) Price: $1.00

Last List July 8, 1992