3-23-93
Vol. 58 No. 54
Pages 15415-15750

federal register

Tuesday
March 23, 1993

Briefings on How To Use the Federal Register
For information on briefings in New York, NY, Los Angeles, CA, Independence, MO, and Washington, DC, see announcement on the inside cover of this issue.

FEDERAL REGISTER Published daily, Monday through Friday, (not published on Saturdays, Sundays, or on official holidays), by the Office of the Federal Register, National Archives and Records Administration, Washington, DC 20408, under the Federal Register Act (49 Stat. 500, as amended; 44 U.S.C. Ch. 15) and the regulations of the Administrative Committee of the Federal Register (1 CFR Ch. I). Distribution is made only by the Superintendent of Documents, U.S. Government Printing Office, Washington, DC 20402.

The **Federal Register** provides a uniform system for making available to the public regulations and legal notices issued by Federal agencies. These include Presidential proclamations and Executive Orders and Federal agency documents having general applicability and legal effect, documents required to be published by act of Congress and other Federal agency documents of public interest. Documents are on file for public inspection in the Office of the Federal Register the day before they are published, unless earlier filing is requested by the issuing agency.

The seal of the National Archives and Records Administration authenticates this issue of the **Federal Register** as the official serial publication established under the Federal Register Act. 44 U.S.C. 1507 provides that the contents of the **Federal Register** shall be judicially noticed.

The **Federal Register** is published in paper, 24x microfiche format and magnetic tape. The annual subscription price for the **Federal Register** paper edition is $375, or $415 for a combined **Federal Register**, Federal Register Index and List of CFR Sections Affected (LSA) subscription; the microfiche edition of the **Federal Register** including the Federal Register Index and LSA is $353; and magnetic tape is $37,500. Six month subscriptions are available for one-half the annual rate. The charge for individual copies in paper form is $4.50 for each issue, or $4.50 for each group of pages as actually bound; or $1.50 for each issue in microfiche form; or $175.00 per magnetic tape. All prices include regular domestic postage and handling. International customers please add 25% for foreign handling. Remit check or money order, made payable to the Superintendent of Documents, or charge to your GPO Deposit Account, VISA or MasterCard. Mail to: New Orders, Superintendent of Documents, P.O. Box 371954, Pittsburgh, PA 15250–7954.

There are no restrictions on the republication of material appearing in the **Federal Register.**

How To Cite This Publication: Use the volume number and the page number. Example: 58 FR 12345.

SUBSCRIPTIONS AND COPIES

PUBLIC	
Subscriptions:	
Paper or fiche	202–783–3238
Magnetic tapes	512–1530
Problems with public subscriptions	512–2303
Single copies/back copies:	
Paper or fiche	783–3238
Magnetic tapes	512–1530
Problems with public single copies	512–2457
FEDERAL AGENCIES	
Subscriptions:	
Paper or fiche	523–5243
Magnetic tapes	512–1530
Problems with Federal agency subscriptions	523–5243

For other telephone numbers, see the Reader Aids section at the end of this issue.

THE FEDERAL REGISTER
WHAT IT IS AND HOW TO USE IT

FOR: Any person who uses the Federal Register and Code of Federal Regulations.

WHO: The Office of the Federal Register.

WHAT: Free public briefings (approximately 3 hours) to present:
1. The regulatory process, with a focus on the Federal Register system and the public's role in the development of regulations.
2. The relationship between the Federal Register and Code of Federal Regulations.
3. The important elements of typical Federal Register documents.
4. An introduction to the finding aids of the FR/CFR system.

WHY: To provide the public with access to information necessary to research Federal agency regulations which directly affect them. There will be no discussion of specific agency regulations.

NEW YORK, NY

WHEN: March 26, at 12:30 pm
WHERE: 26 Federal Plaza
Conference Room 305C
New York, NY
RESERVATIONS: Federal Information Center
1–800–347–1997

LOS ANGELES, CA

WHEN: March 31, at 9:00 am
WHERE: 300 North Los Angeles Street
Conference Room 8041
Los Angeles, CA
RESERVATIONS: Federal Information Center
1–800–726–4995

INDEPENDENCE, MO

WHEN: April 27, at 9:30 am
WHERE: Harry S. Truman Library
U.S. Highway 24 and Delaware St.
Multipurpose Room
Independence, MO
RESERVATIONS: Federal Information Center
1–800–735–8004 or
1–800–366–2998 for the St. Louis area.

WASHINGTON, DC

WHEN: April 8 and May 12 at 9:00 am
WHERE: Office of the Federal Register, 7th Floor
Conference Room, 800 North Capitol Street
NW, Washington, DC (3 blocks north of
Union Station Metro)
RESERVATIONS: 202–523–4538

Printed on recycled paper containing 100% post consumer waste

Contents

Federal Register
Vol. 58, No. 54
Tuesday, March 23, 1993

Agricultural Marketing Service
NOTICES
Meetings:
Tobacco Inspection Services National Advisory Committee, 15467

Agriculture Department
See Agricultural Marketing Service
See Animal and Plant Health Inspection Service
See Commodity Credit Corporation
See Farmers Home Administration
See Forest Service

Animal and Plant Health Inspection Service
NOTICES
Veterinary biological products; production and establishment licenses, 15466

Army Department
NOTICES
Environmental statements; availability, etc.:
Fort Belvoir Engineer Proving Ground, VA; development, 15487

Coast Guard
RULES
Drawbridge operations:
Florida, 15419, 15420, 15421
PROPOSED RULES
Tank vessels:
Vessels that carry oil cargoes; longitudinal strength, plate thickness, and periodic gauging; minimum standards, 15740

Commerce Department
See International Trade Administration
See National Oceanic and Atmospheric Administration

Committee for the Implementation of Textile Agreements
NOTICES
Cotton, wool, and man-made textiles:
Bulgaria, 15485
Textile consultation; review of trade:
Pakistan, 15486

Commodity Credit Corporation
RULES
Loan and purchase programs:
Price support levels—
Rice, 15416

Commodity Futures Trading Commission
NOTICES
Meetings; Sunshine Act, 15521

Customs Service
NOTICES
Country of origin marking:
Czech Republic et al., 15519

Defense Department
See Army Department
See Navy Department
NOTICES
Federal Acquisition Regulation (FAR):
Agency information collection activities under OMB review, 15489, 15490

Education Department
RULES
Postsecondary education:
Institutional eligibility under Higher Education Act of 1965 and student assistance general provisions—
Emergency sanctions; correction, 15523
PROPOSED RULES
Elementary and secondary education:
Drug-free schools and communities emergency grants program, 15748
NOTICES
Agency information collection activities under OMB review, 15490
Meetings:
National Assessment Governing Board, 15491
Postsecondary education:
Cooperative education program; technical assistance workshops, 15491

Employment and Training Administration
NOTICES
Job Training Partnership Act:
Targeted jobs tax credit program—
Lower living standard income level; economically disadvantaged definition, 15506

Energy Department
See Federal Energy Regulatory Commission
PROPOSED RULES
Foreign atomic energy activities; assistance
Correction, 15441
NOTICES
Grants and cooperative agreements; availability, etc.:
National industrial competitiveness through efficiency, energy, environment, and economics State program, 15492
Natural gas exportation and importation:
Petro-Canada Hydrocarbons Inc., 15492

Environmental Protection Agency
RULES
Air quality implementation plans; approval and promulgation; various States:
Maine, 15422
Minnesota, 15431
Clean Air Act:
Acid rain allowance allocations and reserves, 15634
Toxic substances:
Polychlorinated biphenyls (PCBs)—
Waste oil use, 15435
PROPOSED RULES
Air pollutants, hazardous; national emission standards:
Benzene waste operations, 15457

NOTICES
Clean Air Act:
Acid rain provisions—
National Allowance Data Base version 2.1; availability, 15720
Toxic and hazardous substances control:
Premanufacture notices receipts, 15494

Farmers Home Administration
RULES
Program regulations:
Servicing and collections—
Borrowers loan servicing; 60-day deadline extension; State Director exception, 15417

Federal Aviation Administration
PROPOSED RULES
Air carrier certification and operations:
Pilot operating and experience requirements, 15730
Airworthiness directives:
Aerospatiale, 15441
Bell, 15444
McDonnell Douglas et al., 15445
Schweizer Aircraft Corp. et al., 15448
Short Brothers, PLC, 15450
NOTICES
Airport noise compatibility program:
Noise exposure map—
Palo Alto Airport, CA, 15518
Meetings:
Aviation Rulemaking Advisory Committee, 15518

Federal Communications Commission
RULES
Radio stations; table of assignments:
California et al., 15439
Kansas, 15439
Texas, 15440
Washington et al., 15440
PROPOSED RULES
Common carrier services:
MSS Above 1 GHz Negotiated Rulemaking Committee; meetings, 15461
Radio stations; table of assignments:
Hawaii, 15461
Idaho, 15462
Tennessee, 15462
NOTICES
Agency information collection activities under OMB review, 15498

Federal Energy Regulatory Commission
RULES
National gas companies (Natural Gas Act) and Natural Gas Policy Act:
Interstate pipelines—
Facilities construction and replacement authorization; amendments withdrawn, 15418
NOTICES
Applications, hearings, determinations, etc.:
Arkla Energy Resources Co., 15493
CNG Transmission Corp., 15493
South Brunswick CoGen, L.P., 15493
Transcontinental Gas Pipe Line Corp., 15493, 15494

Federal Mine Safety and Health Review Commission
NOTICES
Meetings; Sunshine Act, 15521

Federal Procurement Policy Office
NOTICES
Procurement regulatory activity report; availability, 15516

Federal Reserve System
NOTICES
Meetings; Sunshine Act, 15521

Food and Drug Administration
PROPOSED RULES
Human drugs:
Antiperspirant drug products (OTC); request for comments, 15452
NOTICES
Meetings:
Advisory committees, panels, etc., 15499

Forest Service
NOTICES
Appeal exemptions; timber sales:
Malheur National Forest, OR, 15466

General Services Administration
RULES
Federal travel:
Federal and State relocation income tax allowance tables—
Puerto Rico et al., 15436
NOTICES
Federal Acquisition Regulation (FAR):
Agency information collection activities under OMB review, 15489, 15490

Health and Human Services Department
See Food and Drug Administration
See Health Resources and Services Administration
See National Institutes of Health

Health Resources and Services Administration
NOTICES
Grants and cooperative agreements; availability, etc.:
Exceptional financial need and financial assistance for disadvantaged health professions students programs, 15501

Interior Department
See Land Management Bureau
See National Park Service
See Surface Mining Reclamation and Enforcement Office

International Trade Administration
NOTICES
Antidumping:
Dynamic random access memory semiconductors of one megabit and above from Korea, 15467
Self-propelled bituminous paving equipment, replacement parts, from Canada, 15481

International Trade Commission
NOTICES
Meetings; Sunshine Act, 15521

Interstate Commerce Commission
NOTICES
Agency information collection activities under OMB review, 15505
Motor carriers:
Adequacy of intercity bus service, 15506

Compensated intercorporate hauling operations, 15506
Rail carriers:
Cost recovery procedures—
Adjustment factor, 15506

Justice Department
NOTICES
Grants and cooperative agreements; availability, etc.:
Americans with Disability Act; technical assistance program; correction, 15523

Labor Department
See Employment and Training Administration
See Occupational Safety and Health Administration

Land Management Bureau
NOTICES
Realty actions; sales, leases, etc.:
Wyoming, 15504
Withdrawal and reservation of lands:
Colorado, 15504

Management and Budget Office
See Federal Procurement Policy Office

Mine Safety and Health Federal Review Commission
See Federal Mine Safety and Health Review Commission

National Aeronautics and Space Administration
NOTICES
Federal Acquisition Regulation (FAR):
Agency information collection activities under OMB review, 15489, 15490

National Archives and Records Administration
NOTICES
Agency information collection activities under OMB review, 15513

National Highway Traffic Safety Administration
PROPOSED RULES
Motor vehicle safety standards:
Fuel system and fuel tank integrity—
Compressed natural gas, 15463

National Institutes of Health
NOTICES
Meetings:
National Cancer Institute, 15503
National Institute on Deafness and Other Communication Disorders, 15504

National Oceanic and Atmospheric Administration
PROPOSED RULES
Fishery conservation and management:
Summer flounder, 15463
NOTICES
Permits:
Experimental fishing, 15484

National Park Service
NOTICES
Meetings:
Gates of Arctic National Park Subsistence Resource Commission, 15505
National Register of Historic Places:
Pending nominations, 15505

National Transportation Safety Board
NOTICES
Meetings; Sunshine Act, 15521

Navy Department
NOTICES
Environmental statements; availability, etc.:
Naval Air Station Alameda et al., CA, 15488

Nuclear Regulatory Commission
NOTICES
Meetings:
Nuclear Safety Research Review Committee, 15514
Meetings; Sunshine Act, 15521
Applications, hearings, determinations, etc.:
Rhode Island Atomic Energy Commission, 15514

Occupational Safety and Health Administration
PROPOSED RULES
Safety and health standards:
2-Methoxyethanol, 2-Ethoxyethanol and their acetates (glycol ethers); occupational exposure, 15526
NOTICES
Nationally recognized testing laboratories, etc.:
United States Testing Co., Inc., 15509

Personnel Management Office
RULES
Prevailing rate systems, 15415

Postal Service
NOTICES
Meetings; Sunshine Act, 15522

Public Health Service
See Food and Drug Administration
See Health Resources and Services Administration
See National Institutes of Health

Securities and Exchange Commission
NOTICES
Self-regulatory organizations; proposed rule changes:
Philadelphia Stock Exchange, Inc., 15516

Small Business Administration
NOTICES
Disaster loan areas:
Arizona, 15517
California, 15517
Georgia et al., 15517

Surface Mining Reclamation and Enforcement Office
PROPOSED RULES
Permanent program and abandoned mine land reclamation plan submissions:
Pennsylvania, 15456

Textile Agreements Implementation Committee
See Committee for the Implementation of Textile Agreements

Transportation Department
See Coast Guard
See Federal Aviation Administration
See National Highway Traffic Safety Administration

Treasury Department
See Customs Service

Veterans Affairs Department
NOTICES
Advisory committees; annual reports; availability, 15519
Meetings:
Environmental Hazards Advisory Committee, 15520
Former Prisoners of War Advisory Committee, 15520
Rehabilitation Research and Development Scientific Review and Evaluation Board, 15520

Separate Parts In This Issue

Part II
Department of Labor, Occupational Safety and Health Administration, 15526

Part III
Environmental Protection Agency, 15634

Part IV
Environmental Protection Agency, 15720

Part V
Department of Labor, Federal Aviation Administration, 15730

Part VI
Department of Transportation, Coast Guard, 15740

Part VII
Department of Education, 15748

Reader Aids
Additional information, including a list of public laws, telephone numbers, and finding aids, appears in the Reader Aids section at the end of this issue.

Electronic Bulletin Board
Free **Electronic Bulletin Board** service for Public Law numbers, Federal Register finding aids, and a list of Clinton Administration officials is available on 202–275–1538 or 275–0920.

CFR PARTS AFFECTED IN THIS ISSUE

A cumulative list of the parts affected this month can be found in the Reader Aids section at the end of this issue.

5 CFR
532.....15415

7 CFR
1413.....15416
1951.....15417

10 CFR
Proposed Rules:
810.....15441

14 CFR
Proposed Rules:
39 (5 documents).....15441, 15444, 15445, 15448, 15450
121.....15730

18 CFR
2.....15418
154.....15418
157.....15418
284.....15418
375.....15418
380.....15418

21 CFR
Proposed Rules:
350.....15452

29 CFR
Proposed Rules:
1910.....15526

30 CFR
Proposed Rules:
938.....15456

33 CFR
117 (4 documents).....15419, 15420, 15421

34 CFR
600.....15523
Proposed Rules:
232.....15748

40 CFR
52 (2 documents).....15422, 15431
72.....15634
73.....15634
75.....15634
81.....15422
761.....15435
Proposed Rules:
61.....15457

41 CFR
302-11.....15436

46 CFR
Proposed Rules:
31.....15740
32.....15740

47 CFR
73 (4 documents).....15439, 15440
Proposed Rules:
Ch. I.....15461
73 (3 documents).....15461, 15462

49 CFR
Proposed Rules:
571.....15463

50 CFR
Proposed Rules:
625.....15463

Rules and Regulations

Federal Register
Vol. 58, No. 54
Tuesday, March 23, 1993

This section of the FEDERAL REGISTER contains regulatory documents having general applicability and legal effect, most of which are keyed to and codified in the Code of Federal Regulations, which is published under 50 titles pursuant to 44 U.S.C. 1510.

The Code of Federal Regulations is sold by the Superintendent of Documents. Prices of new books are listed in the first FEDERAL REGISTER issue of each week.

OFFICE OF PERSONNEL MANAGEMENT

5 CFR Part 532

RIN 3206-AF01

Prevailing Rate Systems

AGENCY: Office of Personnel Management.

ACTION: Final rule.

SUMMARY: The Office of Personnel Management (OPM) is amending the current regulations to emphasize the requirement for local Federal activities to cooperate with local wage survey committees and appoint and release employees to participate in Federal Wage System (FWS) surveys unless exceptional circumstances prohibit their appointment or release. Because of occasional difficulties encountered in releasing local employees from their normal work assignments to participate in the FWS wage survey process, members of the Federal Prevailing Rate Advisory Committee (FPRAC) expressed concern that local Federal activities do not understand the importance of FWS surveys. This OPM action clarifies the intent of the current regulations and documents some practices previously contained in Federal Personnel Manual (FPM) guidance.

EFFECTIVE DATE: April 22, 1993.

FOR FURTHER INFORMATION CONTACT: Brenda Roberts, (202) 606-2848.

SUPPLEMENTARY INFORMATION: On September 25, 1992, OPM published a proposed rule to amend the current regulations to emphasize the requirement for local Federal activities to cooperate with local wage survey committees and appoint and release employees to participate in Federal Wage System (FWS) surveys unless exceptional circumstances prohibit their appointment or release (57 FR 44343). No comments were received during the 30-day comment period. However, one minor editorial change is being made in § 532.229(b)(1) to clarify that the management member on the local wage survey committee is to be recommended by Federal agencies. No other changes are being made in the proposed rule.

E.O. 12291, Federal Regulation

I have determined that this is not a major rule as defined under section 1(b) of E.O. 12291, Federal Regulation.

Regulatory Flexibility Act

I certify that these regulations will not have a significant economic impact on a substantial number of small entities because they will affect only Federal agencies and employees.

List of Subjects in 5 CFR Part 532

Administrative practice and procedure, Government employees, Wages.

U.S. Office of Personnel Management.

Patricia W. Lattimore,

Acting Director.

Accordingly, OPM is amending 5 CFR part 532 as follows:

PART 532—PREVAILING RATE SYSTEMS

1. The authority citation for 5 CFR part 532 continues to read as follows:

Authority: 5 U.S.C. 5343, 5346; § 532.707 also issued under 5 U.S.C. 552.

2. In § 532.229, paragraph (b)(1) is revised and new paragraphs (b) (5) and (6) are added to read as follows:

§ 532.229 Local wage survey committee.

* * * * *

(b)(1) Local wage survey committees shall consist of three members, with the chairperson and one member recommended by Federal agencies and designated by the lead agency, and one member recommended by the labor organization having the largest number of wage employees under the regular wage schedule who are under exclusive recognition in the wage area.

* * * * *

(5) In selecting and appointing employees recommended by labor organizations and by Federal agencies to serve as committee members, consideration shall be given to the requirement in the prevailing rate law for labor and agency representatives to participate in the wage survey process, the qualifications of the recommended employees, the need of the employees' work units for their presence on the job, and the prudent management of available financial and human resources. Employing agencies and activities shall cooperate and appoint the recommended employees unless exceptional circumstances prohibit their consideration. When the recommended employees cannot be appointed to serve as local wage survey committee members, the responsible lead agency or labor organization shall provide additional recommendations expeditiously to avoid any delay in the survey process.

(6) Employers shall cooperate and release appointed employees for committee proceedings unless the employers can demonstrate that exceptional circumstances directly related to the accomplishment of the work units' missions require their presence on their regular jobs. Employees serving as committee members are considered to be on official assignment to an interagency function, rather than on leave.

* * * * *

3. In § 532.231, paragraph (c)(2) is revised to read as follows:

§ 532.231 Responsibilities of participating organizations.

* * * * *

(c) * * *

(2) Heads of local activities. The head of each activity in a wage area is responsible for providing employment information, wage survey committee members, the prescribed number of data collectors, and any other assistance needed to conduct local wage survey committee functions.

* * * * *

4. In § 532.233, paragraph (e) is revised to read as follows:

§ 532.233 Preparation for full-scale wage surveys.

* * * * *

(e) Selection and appointment of data collectors. (1) The local wage survey committee, after consultation with the lead agency, shall determine the number of regular and alternate data collectors needed for the survey based upon the estimated number and location of establishments to be surveyed.

(2) Wage data for appropriated fund surveys shall be collected by teams consisting of one local Federal Wage

System employee recommended by the committee member representing the qualifying labor organization and one Federal employee recommended by Federal agencies. The data collectors shall be selected and appointed by their employing agency.

(3) Wage data for nonappropriated fund surveys shall be collected by teams, each consisting of one local nonappropriated fund employee recommended by the committee member representing the qualifying labor organization and one nonappropriated fund employee recommended by nonappropriated fund activities. The data collectors shall be selected and appointed by their employing agency.

(4) The local wage survey committee shall provide employers with the names of employees recommended by labor organizations and by Federal agencies to serve as data collectors and shall indicate the number of regular and alternate data collectors to be selected and appointed by the employers.

(5) In selecting and appointing employees recommended by labor organizations and by Federal agencies to serve as data collectors, consideration shall be given to the requirement in the prevailing rate law for labor and agency representatives to participate in the wage survey process, the qualifications of the recommended employees, the need of the employees' work units for their presence on the job, and the prudent management of available financial and human resources. Employing agencies and activities shall cooperate and appoint the recommended employees unless exceptional circumstances prohibit their consideration. When the required number of employees cannot be appointed to serve as data collectors from among those recommended, the local wage survey committee shall obtain additional recommendations expeditiously to avoid any delay in the survey process.

(6) Employers shall cooperate and release appointed employees to serve as data collectors throughout the duration of the data collection period unless the employers can demonstrate that exceptional circumstances directly related to the accomplishment of the work units' missions require their presence on their regular jobs. Employees serving as data collectors are considered to be on official assignment to an interagency function, rather than on leave.

* * * * *

[FR Doc. 93-6550 Filed 3-22-93; 8:45 am]
BILLING CODE 6325-01-M

DEPARTMENT OF AGRICULTURE

Commodity Credit Corporation

7 CFR Part 1413

RIN 0560-AC72

1993 Rice Acreage Reduction Program

AGENCY: Commodity Credit Corporation, USDA.

ACTION: Final rule.

SUMMARY: This final rule amends the regulations to establish the acreage reduction percentage for the 1993 crop of rice at 5 percent. This action is required by section 101B of the Agricultural Act of 1949, as amended (the 1949 Act).

EFFECTIVE DATE: March 22, 1993.

FOR FURTHER INFORMATION CONTACT: Gene S. Rosera, Agricultural Economist, Fibers and Rice Analysis Division, Agricultural Stabilization and Conservation Service, USDA, room 3758-S, P.O. Box 2415, Washington, DC 20013-2415 or call 202-720-6734.

SUPPLEMENTARY INFORMATION:

Final Regulatory Impact Analysis

The Final Regulatory Impact Analysis describing the options considered in developing this final rule and the impact of the implementation of the selected option is available on request from the above-named individual.

Executive Order 12291 and Departmental Regulation 1512-1

This rule has been reviewed under USDA procedures established in accordance with Executive Order 12291 and provisions of Departmental Regulation 1512-1 and has been classified as "major." It has been determined that an annual affect on the economy of $100 million or more may result from implementing this final rule.

Regulatory Flexibility Act

It has been determined that the Regulatory Flexibility Act is not applicable to this rule since the Commodity Credit Corporation is not required by section 105(b) of the 1949 Act to request comments with respect to the subject matter of this rule.

Environmental Evaluation

It has been determined by an environmental evaluation that this action will have no significant impact on the quality of the human environment. Therefore, neither an Environmental Assessment nor an Environmental Impact Statement is needed.

Federal Assistance Program

The title and number of the Federal assistance program, as found in the Catalog of Federal Domestic Assistance, to which this final rule applies, are as follows: Rice Production Stabilization—10.065.

Executive Order 12372

This program/activity is not subject to the provisions of Executive Order 12372, which requires intergovernmental consultation with State and local officials. See the Notice related to 7 CFR part 3015, subpart V, published at 48 FR 29115 (June 24, 1983).

Executive Order 12778

This final rule has been reviewed in accordance with Executive Order 12778. The provisions of the final rule do not preempt State laws, are not retroactive, and do not involve administrative appeals.

Information Collection Requirements

The amendments to 7 CFR part 1413 set forth in this final rule do not contain information collections that require clearance by the Office of Management and Budget under the provisions of 44 U.S.C. 35.

Background

This final rule amends 7 CFR part 1413 to set forth the acreage reduction requirement under the 1993 Rice Program.

A proposed rule was published in the **Federal Register** on September 28, 1992, at 57 FR 44512 to amend the regulations at 7 CFR part 1413 with respect to the 1993 rice acreage reduction program (ARP) requirements.

During the period for public comment that ended October 20, 1992, one hundred and twelve comments were received regarding the acreage reduction requirement for the 1993 crop of rice. One comment favored no ARP, 54 favored an ARP of zero percent, 5 favored an ARP of 5 percent, and 52 favored an ARP of 10 percent or greater. Many comments stated that it was essential for the continuation of their rice production that the 50/92 program be provided.

After reviewing the comments, it has been decided that the 1993-crop acreage reduction requirement shall be 5 percent. This level is selected because it permits the highest level of rice production while continuing 50/92 program benefits and achieving the stocks-to-use goals of section 101B of the 1949 Act.

List of Subjects in 7 CFR Part 1413

Acreage allotments, Cotton, Disaster assistance, Feed grains, Price support programs, Reporting and recordkeeping requirements, Rice, Soil conservation, Wheat.

Accordingly, 7 CFR part 1413 is amended as follows:

PART 1413—FEED GRAIN, RICE, UPLAND AND EXTRA LONG STAPLE COTTON, WHEAT AND RELATED PROGRAMS

1. The authority citation for 7 CFR part 1413 continues to read as follows:

Authority: 7 U.S.C. 1308, 1308a, 1309, 1441–2, 1444–2, 1444f, 1445b–3a, 1461–1469; 15 U.S.C. 714b and 714c.

2. In § 1413.54, paragraph (a)(4)(ii) is revised, paragraph (a)(4)(iii) is added, and paragraph (d)(3) is revised to read as follows:

§ 1413.54 Acreage reduction program provisions.

(a) * * *

(4) (i) * * *

(ii) 1992 rice, 0 percent;

(iii) 1993 rice, 5 percent.

* * * * *

(d) * * *

(3) For the 1993 crop:

(i) Shall not be made available to producers of wheat;

(ii) Shall not be made available to producers of feed grains,

(iii) Shall not be made available to producers of ELS cotton, and

(iv) Shall not be made available to producers of rice.

* * * * *

Signed at Washington, DC, on March 17, 1993.

Bruce R. Weber,

Acting Executive Vice President, Commodity Credit Corporation.

[FR Doc. 93–6589 Filed 3–22–93; 8:45 am]

BILLING CODE 3410–05–M

Farmers Home Administration

7 CFR Part 1951

RIN 0575–AB42

State Director Exception for an Extension of the 60-day Deadline for Requesting Borrowers Loan Servicing

AGENCY: Farmers Home Administration, USDA.

ACTION: Interim rule with request for comments.

SUMMARY: The 60-day time period for submitting an application for Farmer Program loan servicing may be extended by the Farmers Home Administration (FmHA) State Director in certain cases when the State Director determines there has been extraordinary circumstances. This action is required by the Agricultural Credit Improvement Act of 1992. The intended effect is that in certain cases of extraordinary circumstances the State Director may determine that the borrower be allowed additional time to request loan servicing.

DATES: Interim rule effective March 23, 1993. Comments must be received on or before April 22, 1993.

ADDRESSES: Submit written comments, in duplicate, to the Office of the Chief, Regulations, Analysis and Control Branch (RACB), Farmers Home Administration, USDA, room 6348, South Agricultural Building, 14th Street and Independence Avenue, SW., Washington, DC 20250. All written comments made pursuant to this notice will be available for public inspection during regular working hours at the above address.

FOR FURTHER INFORMATION CONTACT: A. Veldon Hall, Director, Loan Servicing and Property Management Division, Farmer Programs, Farmers Home Administration, USDA, Room 5449, South Agricultural Building, 14th and Independence Avenue, SW., Washington, DC 20250, Telephone (202) 720–4572.

SUPPLEMENTARY INFORMATION:

Classification

This interim rule has been reviewed under USDA procedures established in Departmental Regulation 1512–1, which implements Executive Order 12291, and has been determined to be nonmajor because it will not result in an annual effect on the economy of $100 million or more.

Programs Affected

These changes affect the following FmHA programs as listed in the Catalog of Federal Domestic Assistance:

10.404—Emergency Loans
10.406—Farm Operating Loans
10.407—Farm Ownership Loans
10.410—Low Income Housing Loans (Section 502 Rural Housing Loans)
10.416—Soil and Water Loans

Intergovernmental Consultation

For the reasons set forth in the final rule related to Notice 7 CFR part 3015, subpart V (48 FR 29115, June 24, 1983) and FmHA Instruction 1940–J, "Intergovernmental Review of Farmers Home Administration Programs and Activities" (December 23, 1983). Emergency Loans, Farm Operating Loans, and Farm Ownership Loans are excluded, with the exception of nonfarm enterprise activity, from the scope of Executive Order 12372 which requires intergovernmental consultation with state and local officials. The Soil and Water Loans Program is subject to the provisions of Executive Order 12372 and FmHA Instruction 1940–J.

Certification of Compliance Executive Order 12778

The interim rule has been reviewed in light of Executive Order 12778 and meets the applicable standards provided in Sections 2(a) and 2(b)(2) of that Order. Provisions within this part which are inconsistent with state law are controlling. All administrative remedies pursuant to 7 CFR part 1900 subpart B must be exhausted prior to filing suit.

Environmental Impact Statement

This document has been reviewed in accordance with 7 CFR part 1940, subpart G, "Environmental Program." It is the determination of FmHA that this action does not constitute a major Federal action significantly affecting the quality of the human environment, and in accordance with the National Environment Policy Act of 1969, Public Law 91–190, an Environmental Impact Statement is not required.

Background Discussion of Interim Rule

Section 10 of the Agricultural Credit Improvement Act of 1992 amended section 331D(e) of the Consolidated Farm and Rural Development Act to authorize the appropriate FmHA State Director to determine if extraordinary circumstances exist which would entitle a borrower to receive an extension of time beyond the 60-day deadline to apply for loan servicing. Therefore, FmHA is publishing a revision to its regulations to implement this provision of the Act. Previously, an extension of such time could only be granted under the Administrator's exception authority if the Administrator determined the Government's best interest would be adversely affected. It was not granted on the condition of benefit for the borrower even if there were extraordinary circumstances. In the past, "a rule of reason" was followed to allow extensions of time. However, there were no guidelines for its application, resulting in delays which abused the "rule of reason." The Food, Agriculture, Conservation and Trade Act of 1990 (FACT ACT) extended the time allowed for a borrower to request loan servicing from 45 days to 60 days. On April 30, 1992, (57 FR 18612) FmHA revised its regulations to comply with the FACT ACT and discontinued the "rule of

reason" because of the additional time allowed for submitting an application. On October 28, 1992, however, Congress enacted the Agricultural Credit Improvement Act of 1992. Section 10 of the statute requires FmHA to provide additional time for borrowers to apply for primary loan servicing when the State Director determines that extraordinary circumstances exist. Under the statute and this regulation implementing the statute, the State Director is the only one authorized to grant an extension of time beyond the 60-day deadline based on his or her determination of whether extraordinary circumstances exist which warrant an extension of time.

It is the policy of the Department that rules relating to public property, loans, grants, benefits or contracts shall be published for comment notwithstanding the exemption in 5 U.S.C. 553 with respect to such rules. This revision, however, is not published for proposed rulemaking since the change is necessary to comply with section 23 of the Agricultural Credit Improvement Act of 1992. Section 23 requires that interim regulations necessary to implement this Act be issued within 180 days of the date of enactment. Therefore, this regulation is published as an interim rule with a 30-day comment period.

List of Subjects in 7 CFR Part 1951

Accounting servicing, Credit, Debt restructuring, Loan programs—Agriculture, Loan programs—Housing and community development, Low and moderate income housing loans—Servicing.

Accordingly, part 1951 of chapter XVIII, title 7, Code of Federal Regulations is amended as follows:

PART 1951—SERVICING AND COLLECTIONS

1. The authority citation for part 1951 is revised to read as follows:

Authority: 7 U.S.C. 1989; 42 7 U.S.C., 1480; 5 U.S.C. 301; 7 CFR 2.23 and 2.70.

Subpart S—Farmer Programs Account Servicing Policies

2. Section 1951.916 is amended by redesignating the current paragraph as paragraph (a) and adding paragraph heading, and by adding paragraph (b) to read as follows:

§ 1951.916 Exception authority.

(a) *Administrator.* * * *

(b) *State Director.* The State Director may, in individual cases of extraordinary circumstances, make an exception to the requirement that Attachments 2 or 4 of Exhibit A of this subpart, as appropriate, must be completed and returned to the FmHA County Office with the appropriate forms and documents for a complete application within 60 days after receiving Attachments 1 and 2 or 3 and 4 of Exhibit A of this subpart. If the borrower requests additional time to submit a complete application or submits a complete application after the deadline, the County Supervisor must ask the borrower why the additional time is or was needed. The County Supervisor must ask the borrower whether there are extraordinary circumstances like serious medical illness, severe adverse weather, or a family emergency, and explain that only the State Director can authorize an extension of time for extraordinary circumstances. In such cases, the County Supervisor must document the situation in the case file and immediately submit the request with his or her recommendation on whether the State Director should grant an exception for an extension of time. The request should describe the circumstances in accordance with the examples of extraordinary circumstances mentioned above and recommend an estimate of the additional time needed. Normally, such an extension of time should not exceed 30 days.

Dated: March 4, 1993.

Charles R. Resnick,

Acting Under Secretary, Small Community and Rural Development.

[FR Doc. 93-6590 Filed 3-22-93; 8:45 am]

BILLING CODE 3410-07-M

DEPARTMENT OF ENERGY

Federal Energy Regulatory Commission

18 CFR Parts 2, 154, 157, 284, 375, and 380

[Docket No. RM90-1-002]

Revisions to Regulations Governing Authorizations for Construction of Natural Gas Pipeline Facilities

Issued March 16, 1993.

AGENCY: Federal Energy Regulatory Commission, DOE.

ACTION: Final rule; withdrawal of amendments.

SUMMARY: On September 20, 1991, the Federal Energy Regulatory Commission (Commission) issued a final rule in Order No. 555 that adopted regulations governing the construction and operation of natural gas pipeline facilities. Although the effective date of the final rule subsequently was postponed, the regulations adopted therein nonetheless were codified in the 1992 edition of the Code of Federal Regulations, as well as in the official reporter of Commission orders published by Commerce Clearing House, Inc. This understandably has generated considerable confusion in the industry, particularly among practitioners before the Commission. To alleviate that confusion, the Commission is issuing an order withdrawing the amendments adopted in Order No. 555.

EFFECTIVE DATE: This order is effective on March 16, 1993.

FOR FURTHER INFORMATION CONTACT: Paul W. Schach, Office of the General Counsel, Federal Energy Regulatory Commission, 825 North Capitol Street, NE., Washington, DC 20426 (202) 208-2246.

SUPPLEMENTARY INFORMATION: In addition to this document's being published in the **Federal Register**, all interested persons may inspect or copy its contents during normal business hours in room 3308, 941 North Capitol Street, NE, Washington, DC 20426.

The Commission Issuance Posting System (CIPS), an electronic bulletin board service, provides access to the texts of formal documents issued by the Commission. CIPS is available at no charge to the user and may be accessed using a personal computer with a modem by dialing (202) 208-1397. To access CIPS, set your communications software to use 300, 1200, or 2400 band, full duplex, no parity, 8 data bits, and 1 stop bit. The full text of this document will be available on CIPS for 30 days from the date of issuance. The complete text on diskette in WordPerfect format may also be purchased from the Commission's copy contractor, La Dorn Systems Corporation, also located in room 3308, 941 North Capitol Street, NE, Washington, DC 20426.

Order Withdrawing Amendments

The Federal Energy Regulatory Commission (Commission) is withdrawing the amendments adopted in the final rule issued on September 20, 1991 in Order No. 555.[1]

Order No. 555 adopted final regulations governing the construction of natural gas pipeline facilities. The rule was scheduled to become effective on November 19, 1991. Because of the rule's broad and potentially significant

[1] Revisions to Regulations Governing Authorizations for Construction of Natural Gas Pipeline Facilities, III FERC Stats. & Regs. ¶30,928 (1991); 56 FR 52330 (Oct. 18, 1991).

impact on the natural gas industry, the Commission postponed the effective date of the rule until 30 days after publication in the **Federal Register** of an order on rehearing.[2] That rehearing currently is pending.

Although the Commission postponed the effective date of the final rule, the regulations adopted therein were codified in the 1992 edition of the Code of Federal Regulations, as well as in the official reporter of Commission orders published by Commerce Clearing House, Inc. Codification of the non-effective, Order No. 555 regulations understandably has generated considerable confusion in the industry, particularly among practitioners before the Commission. To alleviate this confusion, the Commission is withdrawing the amendments adopted in Order No. 555. All compilations of Commission regulations thus should reflect the pre-Order No. 555 regulations (as any may have been amended since that time in proceedings other than Order No. 555).

The Commission Orders

The amendments to Commission regulations in 18 CFR parts 2, 154, 157, 284, 375 and 380[3] adopted in Order No. 555 are withdrawn.

By the Commission.

Lois D. Cashell,

Secretary.

[FR Doc. 93-6562 Filed 3-22-93; 8:45 am]

BILLING CODE 6717-01-M

DEPARTMENT OF TRANSPORTATION

Coast Guard

33 CFR Part 117

[CGD7-92-25]

Drawbridge Operation Regulations; Gulf Intracoastal Waterway, FL

AGENCY: Coast Guard, DOT.

ACTION: Final rule.

SUMMARY: At the request of the Sarasota/Manatee Metropolitan Planning Council Organization (MPO) and the Florida Department of Transportation (FDOT), the bridge owner, the Coast Guard is changing the regulations of the Ringling Causeway Drawbridge, mile 73.6, at Sarasota by requiring the bridge to begin regulated operations one half hour earlier. This action will accommodate the needs of vehicular traffic and still provide for the reasonable needs of navigation.

EFFECTIVE DATE: May 7, 1993.

FOR FURTHER INFORMATION CONTACT: Ian MacCartney, Project Manager, Bridge Section, at (305) 536-4103.

SUPPLEMENTARY INFORMATION:

Drafting Information

The principal persons involved in drafting this document are Ian MacCartney, Project Manager, and LT. J.M. Losego, Project Counsel.

Regulatory History

On May 8, 1992, the Coast Guard published a notice of proposed rulemaking entitled Drawbridge Operation Regulations in the **Federal Register** (57 FR 92-10841). The Coast Guard received 5 comments on the proposal. A public hearing was not requested and one was not held.

Background and Purpose

This drawbridge presently opens on signal except that from 7:30 a.m. to 6 p.m., the draw need be opened only on the hour and half hour. The MPO and the bridge owner requested that the regulated period of the half hour opening schedule commence 30 minutes earlier, beginning at 7 a.m. instead of 7:30 a.m. due to increased early morning traffic levels.

Discussion of Comments and Changes

In response to our public notice, we received 5 comments. Three commenters were in favor of the half hour extension. Two commenters wanted an hourly schedule, but did not provide any additional information to support this proposal. A Coast Guard evaluation of the proposal concluded that highway traffic levels and frequency of bridge openings justified beginning the opening schedule 30 minutes earlier. A 60 day test from December 1, 1992, to January 31, 1993, confirmed that the expanded regulated period reduced traffic delays and congestion, without unreasonably impacting navigation.

Regulatory Evaluation

This rule is not major under Executive Order 12291 and not significant under the Department of Transportation regulatory policies and procedures (44 FR 11040; February 26, 1979). The Coast Guard expects the economic impact of this rule to be so minimal that a full regulatory evaluation is unnecessary. We conclude this because the rule exempts tugs with tows.

Small Entities

Under the Regulatory Flexibility Act (5 U.S.C. 601 *et seq.*), the Coast Guard must consider whether this rule will have a significant economic impact on a substantial number of small entities. "Small entities" include independently owned and operated small businesses that are not dominant in their field and that otherwise qualify as "small business concerns" under section 3 of the Small Business Act (15 U.S.C. 632). Since tugs with tows are exempt from this rule, the economic impact is expected to be so minimal, the Coast Guard certifies under section 605(b) of the Regulatory Flexibility Act (5 U.S.C. 601 *et seq.*), that this rule, if adopted, will not have a significant impact on a substantial number of small entities.

Collection of Information

This rule contains no collection of information requirements under the Paperwork Reduction Act (44 U.S.C. 3501 *et seq.*).

Federalism

The Coast Guard has analyzed this rule in accordance with the principles and criteria contained in Executive Order 12612, and has determined that this rule does not have sufficient federalism implications to warrant the preparation of a Federalism Assessment.

Environment

The Coast Guard considered the environmental impact of this rule and concluded that, under section 2.B.2.g.(5) of Commandant Instruction M16475.1B, promulgation of operating requirements or procedures for drawbridges is categorically excluded from further environmental documentation. A Categorical Exclusion Determination is available in the docket.

List of Subjects in 33 CFR Part 117

Bridges.

For the reasons set out in the preamble, the Coast Guard is amending 33 CFR part 117 as follows:

PART 117—DRAWBRIDGE OPERATION REGULATIONS

1. The authority citation for part 117 continues to read as follows:

Authority: 33 U.S.C. 499; 49 CFR 1.46; 33 CFR 1.05-1(g).

2. In § 117.287, paragraph (c) is revised to read as follows:

§ 117.287 Gulf Intracoastal Waterway.

* * * * *

(c) The draw of the Ringling Causeway (SR 780) bridge, mile 73.6, shall open on signal; except that, from

---

[2] Revisions to Regulations Governing Authorizations for Construction of Natural Gas Pipeline Facilities, III FERC Stats. & Reg. ¶30,928A (1991); 56 FR 58844 (Nov. 22, 1991).

[3] Published at 56 FR 52330 on Oct. 18, 1991.

7 a.m. to 6 p.m., the draw need open only on the hour and half hour.

* * * * *

Dated: March 4, 1993.

William P. Leahy,

Rear Admiral, U.S. Coast Guard, Commander, Seventh Coast Guard District.

[FR Doc. 93-6598 Filed 3-22-93; 8:45 am]

BILLING CODE 4910-14-M

---

33 CFR Part 117

[CGD7-92-56]

Drawbridge Operation Regulations; Hillsborough River, Tampa Bay, Northern Part, FL

AGENCY: Coast Guard, DOT.

ACTION: Final rule.

SUMMARY: At the request of the City of Tampa, Hillsborough County and the Florida Department of Transportation (FDOT), (the bridge owners), the Coast Guard is changing the regulations governing seven drawbridges over the Hillsborough River by requiring two hour advance notice prior to opening the bridges. This action will relieve the bridge owners of the burden of having to staff the bridges with full-time bridge tenders to open the draws, while still providing for the reasonable needs of navigation.

EFFECTIVE DATE: May 7, 1993.

FOR FURTHER INFORMATION CONTACT: Mr. Ian MacCartney, Project Manager, Bridge Section, at (305) 536-4103.

SUPPLEMENTARY INFORMATION:

Drafting Information

The principal persons involved in drafting this document are Ian MacCartney, Project Manager, and Lieutenant J.M. Losego, Project Counsel.

Regulatory History

On December 17, 1992, the Coast Guard published a notice of proposed rulemaking entitled Drawbridge Operation Regulations in the **Federal Register** (57 FR 92-30502). The Coast Guard received one letter commenting on the proposal. A public hearing was not requested and one was not held.

Background and Purpose

The drawbridges at Kennedy Blvd., Platt Street, Brorein Street, Cass Street, and Laurel Street which cross the Hillsborough River, presently open on signal from 9 a.m. to 4 p.m., Monday through Friday and from 8 a.m. to 6 p.m. Saturdays, Sundays and Federal holidays. At all other times they open on signal if at least a two hours notice is given. The West Columbus Drive Drawbridge and West Hillsborough Drive Drawbridge open on signal from 8 a.m. to 6 p.m. At all other times the draws open on signal if at least a one hour notice is given. The bridge owners have requested that all seven bridges be allowed to open on signal if at least a two hour advance notice is given. The purpose of the request is to reduce the burden of staffing the bridges with full-time bridgetenders.

Discussion of Comments and Changes

One letter was received from a commercial marine construction company. The commenter requested a 24 hour telephone number to obtain a bridge opening. This number has been established and will be published locally and posted on each bridge.

Regulatory Evaluation

This rule is not major under Executive Order 12291 and not significant under the Department of Transportation regulatory policies and procedures (44 FR 11040; February 26, 1979). The Coast Guard expects the economic impact of this rule to be so minimal that a regulatory evaluation is unnecessary. We conclude this because the bridges seldom open for commercial navigation and the bridge owners have agreed to open the draws as quickly as possible after notification in specified circumstances such as a situation where a delay would endanger life or property.

Small Entities

Under the Regulatory Flexibility Act (5 U.S.C. 601 *et seq.*), the Coast Guard must consider whether this rule if adopted, will have a significant economic impact on a substantial number of small entities. "Small entities" include independently owned and operated small businesses that are not dominant in their field and that otherwise qualify as "small business concerns" under section 3 of the Small Business Act (15 U.S.C. 632). Because it expects the impact of this rule to be minimal, the Coast Guard certifies under section 605(b) of the Regulatory Flexibility Act (5 U.S.C. 601 *et seq.*), that this proposed rule will not have a significant economic impact on a substantial number of small entities.

Collection of Information

This rule contains no collection of information requirements under the Paperwork Reduction Act (44 U.S.C. 3501 *et seq.*).

Federalism

The Coast Guard has analyzed this rule under the principles and criteria contained in Executive Order 12612, and has determined that this rule does not have sufficient federalism implications to warrant the preparation of a Federalism Assessment.

Environment

The Coast Guard considered the environmental impact of this rule and concluded that, under section 2.B.2.g.(5) of Commandant Instruction M16475.1B, promulgation of operating requirements or procedures for drawbridges is categorically excluded from further environmental documentation. A Categorical Exclusion Determination is available in the docket.

List of Subjects in 33 CFR Part 117

Bridges.

For the reasons set out in the preamble, the Coast Guard is amending 33 CFR part 117 as follows:

PART 117—DRAWBRIDGE OPERATION REGULATIONS

1. The authority citation for part 117 continues to read as follows:

Authority: 33 U.S.C. 499; 49 CFR 1.46; 33 CFR 1.05-1(g).

2. In § 117.291, paragraph (c) is removed and paragraph (a) is revised to read as follows:

§ 117.291 Hillsborough River.

(a) The draws of the bridges at Platt Street, mile 0.0, Brorein Street, mile 0.16, Kennedy Boulevard, mile 0.4, Cass Street, mile 0.7, Laurel Street, mile 1.0, West Columbus Drive, mile 2.3, and West Hillsborough Avenue, mile 4.8, shall open on signal if at least two hours notice is given; except that, the draws shall open on signal as soon as possible after a request by a public vessel of the United States, a vessel owned or operated by the State, county or local government and used for public safety purposes, or a vessel in distress.

* * * * *

Dated: March 2, 1993.

William P. Leahy,

Rear Admiral, U.S. Coast Guard, Commander, Seventh Coast Guard District.

[FR Doc. 93-6597 Filed 3-22-93; 8:45 am]

BILLING CODE 4910-14-M

---

33 CFR Part 117

[CGD7-92-112]

Drawbridge Operation Regulations; Okeechobee Waterway, Fort Myers, FL

AGENCY: Coast Guard, DOT.

ACTION: Final rule.

SUMMARY: At the request of Lee County, the bridge owner, the Coast Guard is

changing the regulations governing the Sanibel Causeway Drawbridge, Okeechobee Waterway mile 151, San Carlos Bay at Punta Rassa, by requiring a five (5) minute advance notice prior to opening of the bridge during nighttime hours. This action will relieve the bridge owner of the burden of having a bridge tender at the bridge site constantly available to open the draw, while still providing for the reasonable needs of navigation.

EFFECTIVE DATE: May 7, 1993.

FOR FURTHER INFORMATION CONTACT: Ian MacCartney, Project Manager, Bridge Section, at (305) 536–4103.

SUPPLEMENTARY INFORMATION:

Drafting Information

The principal persons involved in drafting this document are Mr. Ian MacCartney, Project Manager, and Lieutenant J.M. Losego, Project Counsel.

Regulatory History

On December 17, 1992, the Coast Guard published a notice of proposed rulemaking entitled Drawbridge Operation Regulations in the **Federal Register** (57 FR 92–30501). No comments were received in response to the proposal. A public hearing was not requested and one was not held.

Background and Purpose

The Sanibel Causeway Drawbridge, which crosses San Carlos Bay, Okeechobee Waterway mile 151, presently opens on signal except that from 11 a.m. to 6 p.m., the draw opens only on the quarter hour. The bridge owner has requested that from 10 p.m. to 6 a.m., the bridge be untended and allowed to open on signal if at least a five minute advance notice is given. The purpose of the request is to reduce the burden of staffing the bridge with full time bridgetenders during nighttime hours.

Discussion of Comments and Changes

No comments were received. The final rule is unchanged from the proposed rule published on December 17, 1992.

Regulatory Evaluation

This rule is not major under Executive Order 12291 and not significant under the Department of Transportation Regulatory Policies and Procedures (44 FR 11040; February 26, 1979). The Coast Guard expects the economic impact of this rule to be so minimal that a Regulatory Evaluation is unnecessary. We conclude this because the bridge owner has agreed to open the draw with a five minute advance notice.

Small Entities

Under the Regulatory Flexibility Act (5 U.S.C. 601 *et seq.*), the Coast Guard must consider whether this rule will have a significant economic impact on a substantial number of small entities. "Small entities" include independently owned and operated small businesses that are not dominant in their field and that otherwise qualify as "small business concerns" under section 3 of the Small Business Act (15 U.S.C. 632). Because it expects the impact of this rule to be minimal, the Coast Guard certifies under section 605(b) of the Regulatory Flexibility Act (5 U.S.C. 601 *et seq.*), that this rule will not have a significant economic impact on a substantial number of small entities.

Collection of Information

This rule contains no collection of information requirements under the Paperwork Reduction Act (44 U.S.C. 3501 *et seq.*).

Federalism

The Coast Guard has analyzed this rule in accordance with the principles and criteria contained in Executive Order 12612, and has determined that this rule does not have sufficient federalism implications to warrant the preparation of a Federalism Assessment.

Environment

The Coast Guard considered the environmental impact of this rule and concluded that, under section 2.B.2.g.(5) of Commandant Instruction M16475.1B, promulgation of operating requirements or procedures for drawbridges is categorically excluded from further environmental documentation. A Categorical Exclusion Determination is available in the docket.

List of Subjects in 33 CFR Part 117

Bridges.

For the reasons set out in the preamble, the Coast Guard amends 33 CFR part 117 as follows:

PART 117—DRAWBRIDGE OPERATION REGULATIONS

1. The authority citation for part 117 continues to read as follows:

Authority: 33 U.S.C. 499; 49 CFR 1.46; 33 CFR 1.05–1(g).

2. In § 117.317, paragraph (k) is revised to read as follows:

§ 117.317 Okeechobee Waterway.

* * * * *

(k) Sanibel Causeway bridge, mile 151 at Punta Rassa. The draw shall open on signal; except that from 11 a.m. to 6 p.m., the draw need open only on the hour, quarter hour, half hour, and three quarter hour. From 10 p.m. to 6 a.m. the draw will open on signal if at least a five minute advance notice is given. Exempt vessels shall be passed at any time.

Dated: March 2, 1993.

William P. Leahy,

Rear Admiral, U.S. Coast Guard, Commander, Seventh Coast Guard District.

[FR Doc. 93–6599 Filed 3–22–93; 8:45 am]

BILLING CODE 4910–14–M

---

33 CFR Part 117

[CGD7–92–28]

Drawbridge Operation Regulations; New Pass, FL

AGENCY: Coast Guard, DOT.

ACTION: Final rule.

SUMMARY: At the request of the Sarasota/Manatee Metropolitan Planning Organization (MPO) and the Florida Department of Transportation (FDOT), the bridge owner, the Coast Guard is changing the regulations of the New Pass Drawbridge, mile 0.0, between Longboat Key and Lido Key at Sarasota by extending the hours on Saturday, Sunday and federal holidays during which the bridge need open only every 20 minutes. This change is being made because periods of peak vehicular traffic have changed. This action will reduce weekend traffic congestion and still provide for the reasonable needs of navigation.

EFFECTIVE DATE: May 7, 1993.

FOR FURTHER INFORMATION CONTACT: Ian MacCartney, Project Manager, Bridge Section, at (305) 536–4103.

SUPPLEMENTARY INFORMATION:

Drafting Information

The principal persons involved in drafting this document are Mr. Ian MacCartney, Project Manager, and Lieutenant J. M. Losego, Project Counsel.

Regulatory History

On May 8, 1992, the Coast Guard published a notice of proposed rulemaking entitled Drawbridge Operation Regulations in the **Federal Register** (57 FR 92–10843). The Coast Guard received 40 letters commenting on the proposal. A public hearing was not requested and one was not held.

Background and Purpose

This drawbridge presently opens on signal except that from 7 a.m. to 6 p.m. Monday through Friday, except federal holidays, and from 10 a.m. to 6 p.m. on Saturdays, Sundays and federal

holidays the draw need open only on the hour, 20 minutes past the hour and 40 minutes past the hour. The MPO and the bridge owner requested that the bridge be allowed to open only on the hour and half-hour from 7 a.m. to 6 p.m. weekdays and from 9 a.m. to 6 p.m. on weekends. A Coast Guard evaluation of the proposed changes concluded the two lane highway has become seriously congested between 7 a.m. and 6 p.m. each day. However, the number of bridge openings averages less than 7 per day and the vessel holding conditions near the bridge are unsafe for extended delays due to shoaling, strong currents and cross winds.

As a result of these navigational limitations, the Coast Guard recommended the existing 20 minute opening schedule be effective from 7 a.m. to 6 p.m. each day which will limit the number of drawbridge openings throughout the year.

Discussion of Comments and Changes

In response to our public notice, we received 40 comments. Seven commenters were in favor of the 20 minute schedule. Thirty three commenters recommended a 30 minute schedule, but did not provide any additional information to support this proposal. A 60 day trial of the 20 minute schedule from December 1, 1992, to January 31, 1993, helped reduce traffic delays and congestion, without unreasonably impacting navigation. The final rule is unchanged from the proposed rule published in the **Federal Register** on May 8, 1992.

Regulatory Evaluation

This rule is not major under Executive Order 12291 and not significant under the Department of Transportation regulatory policies and procedures (44 FR 11040; February 26, 1979). The Coast Guard expects the economic impact of this rule to be so minimal that a full regulatory evaluation is unnecessary. We conclude this because the rule exempts tugs with tows.

Small Entities

Under the Regulatory Flexibility Act (5 U.S.C. 601 *et seq.*), the Coast Guard must consider whether this rule will have a significant economic impact on a substantial number of small entities. "Small entities" include independently owned and operated small businesses that are not dominant in their field and that otherwise qualify as "small business concerns" under section 3 of the Small Business Act (15 U.S.C. 632). Since tugs with tows are exempt from this rule, the economic impact is expected to be so minimal, the Coast Guard certifies under section 605(b) of the Regulatory Flexibility Act (5 U.S.C. 601 *et seq.*), that this rule will not have a significant impact on a substantial number of small entities.

Collection of Information

This rule contains no collection of information requirements under the Paperwork Reduction Act (44 U.S.C. 3501 *et seq.*).

Federalism

The Coast Guard has analyzed this rule in accordance with the principles and criteria contained in Executive Order 12612, and has determined that this rule does not have sufficient federalism implications to warrant the preparation of a Federalism Assessment.

Environment

The Coast Guard considered the environmental impact of this rule and concluded that, under section 2.B.2.g.(5) of Commandant Instruction M16475.1B, promulgation of operating requirements or procedures for drawbridges is categorically excluded from further environmental documentation. A Categorical Exclusion Determination is available in the docket.

List of Subjects in 33 CFR Part 117

Bridges.

For the reasons set out in the preamble, the Coast Guard amends 33 CFR part 117 as follows:

PART 117—DRAWBRIDGE OPERATION REGULATIONS

1. The authority citation for part 117 continues to read as follows:

Authority: 33 U.S.C. 499; 49 CFR 1.46; 33 CFR 1.05-1(g).

2. Section 117.311 is revised to read as follows:

§ 117.311 New pass.

The draw of the State Road 789 bridge, mile 0.0, at Sarasota, shall open on signal; except that from 7 a.m. to 6 p.m., the draw need open only on the hour, twenty minutes past the hour and forty minutes past the hour. Public vessels of the United States, tugs with tows, and vessels in a situation where a delay would endanger life or property shall, upon proper signal, be passed at any time.

Dated: March 4, 1993.

William P. Leahy,

Rear Admiral, U.S. Coast Guard District.

[FR Doc. 93-6600 Filed 3-22-93; 8:45 am]

BILLING CODE 4910-14-M

ENVIRONMENTAL PROTECTION AGENCY

40 CFR Parts 52 and 81

[ME-01-01-5068; A-1-FRL-4525-2]

Approval and Promulgation of Air Quality Implementation Plans; Maine; NSR/PSD Revisions and Related Revisions for Stack Heights, Visibility, and PM_{10}

AGENCY: Environmental Protection Agency (EPA).

ACTION: Final rule.

SUMMARY: EPA is approving State Implementation Plan (SIP) revisions submitted by the State of Maine. These revisions were made to satisfy the federal new source review (NSR) requirements for the preconstruction permitting of new sources and modifications in both attainment and nonattainment areas. In addition, EPA is approving revisions that were included in the State's submittal which incorporate stack height and dispersion techniques regulations, visibility protection provisions for mandatory federal class I areas and associated integral vistas, and changes associated with the revised national ambient air quality standards (NAAQS) for particulate matter (PM_{10}).

EPA is approving additional revisions which include adoption of the 24-hour PM_{10} NAAQS, adoption of a more stringent State ambient air quality standard for annual PM_{10} levels, and deletion of the ambient air quality standards for total suspended particulate (TSP). These additional revisions combined with the particulate matter revisions in paragraph I, above, constitute a Group III particulate matter SIP. In addition, the Maine Department of Environmental Protection (DEP) requested that EPA redesignate areas classified as nonattainment for TSP to "Cannot Be Classified." EPA is approving the Maine DEP's redesignation request. Finally, EPA is approving an additional revision to Maine's definition of volatile organic compound (VOC) to exclude four more compounds with negligible photochemical reactivity.

The intended effect of this action is to approve the State's request to amend its SIP to incorporate these federal requirements. This action is being taken in accordance with section 110 of the Clean Air Act (the Act).

EFFECTIVE DATES: The amendments to §§ 52.1020(c)(26), 52.1031, and 52.1033 will become effective May 24, 1993. The amendments to §§ 52.1020(c)(27) and 81.320 will become effective May 24,

1993 unless notice is received by April 22, 1993 that adverse or critical comments will be submitted on the portions of the State's submittal that EPA is immediately approving. If the effective date is delayed, EPA will publish timely notice in the **Federal Register**.

ADDRESSES: Comments on section II of this preamble may be mailed to Linda M. Murphy, Director, Air, Pesticides and Toxics Management Division, U.S. Environmental Protection Agency, Region I, JFK Federal Bldg., AAA, Boston, MA 02203. Copies of the documents relevant to these actions are available for public inspection by appointment during normal business hours at the Air, Pesticides and Toxics Management Division, U.S. Environmental Protection Agency, Region I, One Congress Street, Tenth Floor, Boston, MA; Public Information Reference Unit, U.S. Environmental Protection Agency, 401 M Street, SW., Washington, DC 20460; and the Bureau of Air Quality Control, Department of Environmental Protection, 71 Hospital Street, Augusta, ME 04333.

FOR FURTHER INFORMATION CONTACT: For NSR questions or issues contact Lynne A. Hamjian, (617) 565–3250; and for stack heights, visibility and PM_{10} questions or issues contact Brian Hennessey, (617) 565–3223.

SUPPLEMENTARY INFORMATION: On July 7, 1989 (54 FR 28684), EPA published a Notice of Proposed Rulemaking (NPR) for the State of Maine. The NPR proposed approval of NSR requirements for the preconstruction permitting of new sources and modifications in both attainment and nonattainment areas which were submitted to EPA on August 22, 1988. In addition, the NPR proposed approval of revisions that were included in the State's submittal which incorporated stack height and dispersion techniques regulations, visibility protection provisions for mandatory federal class I areas and associated integral vistas, and changes associated with the revised NAAQS for PM_{10}. The NPR required the Maine DEP to make certain changes in the regulations to meet federal requirements. On October 27, 1989, the Maine DEP resubmitted these revisions as a formal SIP revision including the changes necessary to meet federal requirements. This final rulemaking action approves these formal SIP revisions.

This final rulemaking action also approves additional revisions submitted by the Maine DEP on October 31, 1989, which include adoption of a revised VOC definition and the 24-hour PM_{10} NAAQS, a more stringent state ambient air quality standard for annual PM_{10} levels, and deletion of the ambient air quality standards for TSP. In addition, this final rulemaking approves the Maine DEP's request that EPA redesignate areas classified as nonattainment for TSP to "Cannot Be Classified" for TSP.

This preamble is divided into two separate sections for clarity and to reflect differences in the procedural posture of the sections. Section I discusses the revisions to Maine NSR regulations including the associated state regulations for the prevention of significant deterioration (PSD), nonattainment area NSR permitting, general permitting, stack heights, visibility, and PM_{10}. After having given notice and responding to comments on these revisions in section I, EPA is taking final action approving them today.

Section II of this preamble discusses the additional revisions including the 24-hour PM_{10} NAAQS, a more stringent state ambient air quality standard for annual PM_{10} levels, deletion of the ambient air quality standards for TSP, a TSP redesignation request, and a revision of the definition of VOC. EPA is taking direct final action on the revisions in section II, without prior notice, unless EPA receives notice within 30 days that adverse or critical comments will be submitted. If such notice is received, EPA will withdraw section II of this final action and republish it as a notice of proposed rulemaking. Any such notice would not, however, affect the finality of matters addressed in section I of this preamble.

I. NSR Revisions Which EPA Proposed Approval of on July 7, 1989 (54 FR 28684)

A. NSR/PSD Provisions

1. Background

In 1979, the Maine DEP adopted NSR regulations (including those for PSD) to satisfy the requirements for SIPs codified at 40 CFR part 51. EPA approved these regulations and incorporated them into the SIP on January 25, 1980 and February 12, 1980. On August 7, 1980, EPA promulgated major revisions to 40 CFR part 51's NSR/PSD requirements for SIPs in response to the court's decision in *Alabama Power Co.* v. *Costle*, 636 F.2d 323 (D.C. Cir. 1979). In addition, on October 14, 1981, EPA promulgated a change in the definition of the term "stationary source" in the part 51 regulations for nonattainment areas to give states the option of adopting the "plantwide" definition. See 46 FR 50766. The Maine DEP has adopted revisions to its SIP's NSR/PSD regulations (including the plantwide definition) to be consistent with the NSR/PSD requirements codified at 40 CFR 51.160 through 51.166.

2. Summary of NSR/PSD Revisions Including Changes That Were Necessary Prior to Final Rulemaking

On October 27, 1989, the Maine DEP formally submitted amended regulations to EPA as revisions to its SIP. The revisions include changes to Chapter 100 "Definitions," Chapter 110 "Ambient Air Quality Standards," Chapter 113 "Growth Offset Regulation," Chapter 114 "Classification of Air Quality Control Regions," Chapter 115 (formerly Chapter 108) "Emission License Regulations," Chapter 116 "Prohibited Dispersion Techniques," portions of Chapter 1 "Regulations for the Processing of Applications," and the narrative portion of this SIP revision in Chapter 6 "Review of New Sources and Modifications." Pursuant to Maine's request (in its original August 22, 1988 SIP submittal), EPA is withdrawing Chapter 108 from the existing SIP regulations and is replacing it with the new Chapter 115. These revisions also include a letter from the Maine DEP dated May 1, 1989 which states that the Maine DEP is implementing a "Top Down" approach in determining Best Available Control Technology (BACT) and will continue to do so in all future BACT determinations.

EPA's NPR published July 7, 1989 (54 FR 28684, 28685) required three changes to the Maine DEP's SIP submittal prior to final rulemaking. The Maine DEP made the following changes which were outlined in EPA's NPR:

1. The Maine DEP amended its definition of "major source" to incorporate the provisions of 40 CFR 51.165(a)(1)(iv)(A)(2) and 51.166(b)(1)(i)(c).

2. The Maine DEP added a definition of the term "begin actual construction" equivalent to the term found at 40 CFR 51.166(b)(11).

3. The Maine DEP resubmitted Chapter 1 in its State-adopted form with the appropriate numbers and references.

The Maine DEP made one additional change since EPA's NPR. On March 2, 1990, the Maine DEP withdrew the definition of "fuel burning equipment" in Chapter 100(29) from its SIP submittal. Chapter 100(29) is not part of this action. EPA will be approving a new definition of "fuel burning equipment" in Chapter 100(29) in a separate notice.

EPA has evaluated these revisions and found that they are equivalent to, or in some instances, more stringent than, the requirements in 40 CFR 51.160 through 51.166. Maine's regulations for NSR/PSD and EPA's evaluation are detailed in a memorandum dated February 7, 1990 entitled "Technical Support Document—Maine New Source Review Revisions."

B. Stack Height and Dispersion Techniques Provisions

1. Background

On February 8, 1982 (47 FR 5864), EPA promulgated final regulations limiting stack height credits and other dispersion techniques as required by section 123 of the Act. These regulations were challenged in the U.S. Court of Appeals for the D.C. Circuit by the Sierra Club Legal Defense Fund, Inc., the Natural Resources Defense Council, Inc., (NRDC) and the Commonwealth of Pennsylvania. On October 11, 1983, the court issued its decision ordering EPA to reconsider portions of the stack height regulations, reversing certain portions, and upholding other portions. *Sierra Club* v. *EPA*, 710 F.2d 436 (D.C. Cir. 1983). The court required EPA to promulgate certain revisions to the stack height regulations, which were proposed on November 9, 1984 (49 FR 344878) and finalized on July 8, 1985 (50 FR 27892).

The revisions redefined a number of specific terms including "excessive concentrations," "dispersion techniques," "nearby," and other important concepts, and modified some of the bases for determining good engineering practice (GEP) stack height.

Pursuant to section 406(d)(2)(B) of the Clean Air Act Amendments of 1977 (Pub. L. 95–95), all states were required to: (1) Review and revise, as necessary, their SIPs to include provisions that limit stack height credits and dispersion techniques in accordance with the revised regulations; and (2) review all existing emission limitations to determine whether any of these limitations have been affected by stack height credits above GEP or any other dispersion techniques. For any limitations so affected, states were to prepare revised limitations consistent with their revised SIPs. All SIP revisions and revised emission limits were to be submitted to EPA, as required by section 406. Subsequently, EPA issued detailed guidance on the performance of the required reviews.

On January 22, 1988, the U.S. Court of Appeals issued a decision regarding EPA's revised July 8, 1985 stack height regulations. *NRDC* v. *Thomas*, 838 F.2d 1224 (D.C. Cir. 1988). The Court remanded three provisions to EPA that may potentially bear on state actions now being taken pursuant to EPA's July 8, 1985 regulations. Since EPA is currently in the process of reconsidering the remanded provisions and the outcome is as yet unknown, EPA's review of Maine's October 27, 1989 submittal addresses its consistency with the July 8, 1985 regulations only. If EPA further revises its regulations in response to the remand at some future date, Maine will, at that time, be required to revise its regulations accordingly. Sources affected by such revisions may have to have their permits amended and/or be required to submit new demonstrations that they meet applicable ambient standards.

2. Summary of Maine's Stack Height and Dispersion Techniques Revisions Including Changes That Were Necessary Prior to Final Rulemaking

Maine's October 27, 1989 SIP submittal includes revised regulations at Chapter 116 which limit stack height credits and dispersion techniques in accordance with the requirements of 40 CFR 51.100 and 51.118. Additionally, Maine's revisions to Chapter 116 define the term "ambient air." A separate SIP revision submittal, received by EPA on September 30, 1988, contains the Maine DEP's review of all existing emission limitations and documents that these limitations are consistent with EPA's stack height requirements. EPA has approved that SIP revision in a separate rulemaking notice published in the **Federal Register** on February 27, 1989 (54 FR 8189).

EPA's NPR required one change to the Maine DEP's SIP submittal prior to final rulemaking. 54 FR 28686. The Maine DEP revised Chapter 116 to include the requirements of 40 CFR 51.100(kk)(2) as required in EPA's NPR.

EPA has evaluated these revisions and found that they are equivalent to, or in some instances, more stringent than, the requirements in 40 CFR 51.100 and 51.118, as amended on July 8, 1985. Maine's regulations for stack height and dispersion techniques and EPA's evaluation are detailed in two memoranda entitled "Technical Support Document—Chapter 116 of Maine DEP's Regulations," dated December 19, 1988, and "Technical Support Document Addendum—ME's NSR Package: Chapter 116 (Stack Height Regulations), Visibility Protection Regulations, and PM_{10} Regulations," dated November 30, 1989.

C. Visibility Provisions

1. Background

As part of the Clean Air Act Amendments of 1977, Congress adopted section 169A setting a national goal of preventing any future, and remedying any existing, impairment of visibility in mandatory class I federal areas resulting from manmade air pollution. On December 2, 1990, EPA promulgated Phase I visibility regulations, 40 CFR 51.300 through 51.307 to address "reasonably attributable" impairment—that impairment which can be traced to a single existing stationary facility or small group of existing stationary facilities by available techniques.

Part 51 regulations require that SIPs address the following:

1. Coordination with the class I area Federal Land Manager;
2. Review of proposed new sources for their impact on visibility in class I area and integral vistas;
3. A monitoring strategy for evaluating visibility in class I areas;
4. Best available retrofit technology (BART) analyses for existing facilities identified as reasonably anticipated to cause or contribute to visibility impairment in class I areas; and
5. A long-term strategy (10–15 years) for making reasonable progress toward the national visibility goal.

On July 12, 1985, EPA promulgated a visibility Federal Implementation Plan (FIP) covering the monitoring and NSR provisions for Maine and a number of other states that failed to submit necessary visibility SIP revisions. 50 FR 28551. The FIP was promulgated pursuant to Part 1 of a settlement agreement reached in response to a citizen's suit filed in the U.S. District Court for the Northern District of California by the Environmental Defense Fund (EDF) and other environmental groups, *EDF* v. *Reilly*, No. C82–6850 RPA (N.D. Cal. 1982).

On November 24, 1987 pursuant to Part 2 of that settlement agreement, EPA promulgated a visibility FIP covering the long-term strategy provisions and revising the NSR FIP to include integral vista provisions. 52 FR 45137. The FIP promulgated on November 24, 1987, however, deferred action on BART control strategies at existing sources for certain class I areas.

2. Summary of Maine's Visibility Revisions Including Changes That Were Necessary for Final Rulemaking

Maine's October 27, 1989 SIP revision submittal includes many of the requirements covered under EPA's visibility protection regulations at 40 CFR 51.300 through 51.307, and

therefore, those included in EPA's Part 1 visibility FIP. A summary of the visibility-related revisions in Maine's submittal was detailed in EPA's NPR at (54 FR 28686–28688) and will not be restated here.

EPA's NPR required one change to the Maine DEP's SIP submittal prior to final rulemaking. 54 FR 28688. The Maine DEP corrected the identification of a "key feature" observed from Roosevelt Campobello International Park as required in EPA's NPR. Additionally, EPA also stated in the NPR that Maine's submittal did not include certain visibility protection regulations, and noted that relevant portions of the FIP would remain in effect until such time as the Maine DEP submits additional SIP revisions. Maine's October 27, 1989 formal submittal included a revision to Chapter 115 adding a provision for advance notification within 30 days of all affected Federal Land Managers where the Maine DEP confers with a proposed source prior to actual receipt of a permit application. Therefore, this particular FIP provision is satisfied and is no longer necessary. Finally, in response to comments on EPA's NPR from the National Park Service, the Maine DEP corrected its list of integral vistas in Chapter 114.

While Maine's October 27, 1989 submittal addresses many of the requirements for FIPs covered by 40 CFR part 51's visibility regulations, it should be clearly noted that other provisions of those regulations still require action on Maine's part to supersede all of the FIP. Therefore, relevant portions of the FIP will remain in effect in Maine until such time as Maine submits additional SIP revisions to address the following issues:

(1) A long-term strategy for remedying existing impairment as required at 40 CFR 51.306; and

(2) The identification and application of BART and other measures to applicable existing sources as required at 40 CFR 51.302 (b) and (c)(2), (3) and (4).

EPA will take separate rulemaking actions on those additional SIP revisions at such time as the Maine DEP submits them for approval.

EPA's evaluation of the changes pertaining to visibility protection is contained in two memoranda entitled "Technical Support Document—Maine's Class I Visibility Protection Regulations," dated December 19, 1988, and "Technical Support Document Addendum—ME's NSR Package: Chapter 116 (Stack Height Regulations), Visibility Protection Regulations, and PM_{10} Regulations," dated November 30, 1989.

D. PM_{10} Provisions

1. Background

On July 1, 1987, EPA promulgated a revised NAAQS for particulate matter (52 FR 2463). EPA revised the old definition of the NAAQS from TSP to a new definition (i.e., PM_{10}). The new definition applies to particular matter with aerodynamic diameters of 10 micrometers or less.

2. Summary of Maine's PM_{10} Revisions Including Changes That Were Necessary Prior to Final Rulemaking

On October 27, 1989, the Maine DEP submitted amended regulations to EPA as revisions to its SIP. These revisions incorporate NSR-related PM_{10} requirements that include changes to the following regulations: Chapter 100 "Definitions," and Chapter 115 "Emission License Requirements." These amendments include the relevant definitions and PM_{10} PSD provisions. These amendments do not include the definitions of the terms "particulate matter emissions" and "PM_{10} emissions," nor do they include provisions related to significant harm levels and emergency episode plans for PM_{10}. The state has since submitted these revisions and EPA will process them as separate actions. The revisions approved in section I, combined with the revisions EPA is approving in section II of this notice, satisfy Group III area requirements to adopt PM_{10} air quality standards, to incorporate the new standards into preconstruction review and permitting regulations, to establish a PM_{10} monitoring network, and to define any terms the revised SIP uses to implement the new standards.

EPA's NPR required one change to the Maine DEP's SIP submittal prior to final rulemaking. 54 FR 28688. The Maine DEP added provisions in its regulations which require that new or modified sources that would cause or contribute to a violation of the PM_{10} NAAQS comply with nonattainment NSR requirements (lowest achievable emission rate, offsets, statewide compliance, etc.) in order to avoid causing or contributing to a NAAQS violation. These provisions satisfy the requirements of EPA's NPR.

Maine's NSR-related PM_{10} regulations and EPA's evaluation are detailed in two memoranda entitled "Technical Support Document-Maine's Particulate Matter Regulations," dated January 5, 1988, and "Technical Support Document Addendum—ME's NSR Package: Chapter 116 (Stack Height Regulations), Visibility Protection Regulations, and PM_{10} Regulations," dated November 30, 1989.

E. Public Comments

On July 7, 1989 (54 FR 28684), EPA published a notice of proposed rulemaking (NPR) proposing to approve the Maine's NSR/PSD revisions, and related revisions for stack height, visibility, and PM_{10}. EPA received comments from two parties, the National Park Service, and Texaco Inc., in response to the NPR. A brief summary of the comments and responses are presented below.

Comment: Overall, the National Park Service supported Maine's visibility protection provisions, but recommended some technical corrections to the state-declared integral vistas in Maine SIP.

The National Park Service recommended the following:

(1) Correction of erroneous listing of the names of specific vistas under the "key features" heading for some views;

(2) Deletion of certain "key feature" listings where protection is already afforded due to their location within a mandatory class I area; and

(3) Correction of erroneous compass reading for a Duck Harbor view.

Response: In response to the National Park Service's comments, the Maine DEP revised its regulations. These revisions are consistent with Maine's original intent at the time it proposed these regulations on the state level. The Maine DEP submitted these revisions on October 27, 1989.

Comment: In a letter dated August 8, 1989, Texaco Inc. commented on a statement in EPA's NPR regarding certain aspects of the federal-state relationship following final approval of the Maine SIP.[1] The company characterized this statement as a suggestion by EPA that the Agency will be able to enforce interpretations and guidance as if they were part of the formally adopted SIP. The company then asserted that EPA lacks authority under the Administrative Procedure Act to treat interpretations and guidance in this fashion, and that, as to future interpretations, this approach would result in a SIP that is so vague as to violate the Fifth Amendment to the Constitution of the United States.

Response: EPA today clarifies that it did not intend to suggest that Maine is

[1] The comment period on EPA's proposal to approve Maine's submittal closed on August 7, 1989. (See 54 FR 28684, July 7, 1989.) EPA Region I received Texaco's comment letter, dated August 8, 1989, on August 11, 4 days after the comment period on the Notice of proposed Rulemaking closed. Although Texaco's comments were not submitted on a timely basis, and thus, EPA is not obligated to consider or respond to them, and has not formally done so, EPA will informally respond in the interest of fully addressing issues brought to the Agency's attention by the interested public.

required to follow EPA's interpretations and guidance issued under the Act in the sense that those pronouncements have independent status as enforceable provisions of the Maine SIP, such that mere failure to follow such pronouncements would constitute a violation of the Act. Rather, as discussed below, EPA's intent is merely to place the state and the public on notice of EPA's duty under the Act to continue to oversee the NSR provisions of the Act following approval of a state program. The preamble language in question is neither part nor a condition of EPA's approval of Maine's SIP, and has no binding effect. Rather than creating new rights or obligations, it advises the public of EPA's views regarding obligations that already exist by operation of the applicable statutory and regulatory provisions.

The issuance of PSD permits and other actions by the state in the administration of the federal Clean Air Act must conform to the requirements of the Act and the SIP. See sections 167 and 113, 42 U.S.C. 7477 and 7413 (EPA's enforcement authority in overseeing state implementation). In making judgments as to what constitutes compliance with the Act and regulations issued thereunder, EPA looks to (among other sources) its policy statements and interpretive rulings in effect at the time of EPA's action regarding those statutory and regulatory requirements. It follows that state actions implementing the federal Clean Air Act which do not conform to the Act may lead to potential enforcement action by EPA. However, in defending against such an enforcement action, a party is free to assert that EPA has not reasonably interpreted the underlying statutory and regulatory provisions.

EPA's approval of a state NSR program or some portion of it does not divest the Agency of its duty, to continue a vigorous oversight and enforcement role under sections 113 and 167. For example, section 167 provides that EPA shall take whatever enforcement action may be necessary to prevent construction of a major stationary source that does not "conform to the requirements of" the PSD program. Thus, as to PSD, the purpose of the preamble language in the July 1989 notice was to advise Maine of EPA's view that approval of a state's PSD program does not bar EPA from deciding whether a state-issued PSD permit conforms to the Act's PSD requirements. In addition, section 113(a)(5) (as amended) grants EPA similar authority in both PSD and nonattainment areas.

However, in other instances, EPA action approving a SIP revision can act to adopt interpretations of the statute, regulations, or implementation plans as part of the revised SIP. As to matters of particular importance, EPA may urge the states to take steps to agree to specific interpretations and policies through the SIP approval process. States may also do this on their own volition. As noted above, this process has been followed in today's action regarding a May 1, 1989 letter from the Maine DEP.

Following SIP approval, then, EPA remains the congressionally designated agency with primary authority to reasonably interpret the applicable federal law under the Act and to base its enforcement actions on those interpretations. If EPA determines that a state-issued permit does not conform to the Act's NSR requirements, EPA will decide whether to sue the state and/or the source to redress the violation. See sections 113(a)(5), 167.

EPA acknowledges that states have the primary role in administering and enforcing the various components of the NSR program. For the most part, the states have been successful in this effort, and EPA's involvement in interpretative and enforcement issues is limited to only a small number of cases. Consequently, EPA's continuing oversight role under the Act leaves Maine and other states with considerable discretion to implement the NSR program as they see fit. First, as noted in the notice of proposed rulemaking, EPA may not fundamentally change the requirements set forth in its own regulations or SIPs through interpretative rulings or policy statements. The creation of new rights or obligations can only be accomplished by enactment of legislation or revisions to the regulations in 40 CFR parts 51 and 52 and by SIP revisions, in accordance with applicable rulemaking procedures. Second, EPA's interpretations often are intended in whole or in part to guide only EPA Regional Offices, and in such instances they have no implications whatsoever for a state's administration of its program.

Thus, EPA believes that the language in question in the September 29, 1989 notice, as clarified here, accurately describes the legal relationship between EPA and the State of Maine with respect to the NSR program.

F. Clean Air Act Amendments of 1990

EPA has reviewed the revisions in section I of this notice for conformance with the provisions of the Clean Air Act Amendments enacted on November 15, 1990. As is discussed, an accommodation has been made for all of the immediately applicable NSR requirements of the Amendments. This approval in no way relieves Maine of the obligation to submit further revisions to its SIP to meet the Act's new requirements according to the schedule contained in the Act. In addition, EPA is currently developing revised federal NSR regulations and Maine will adopt these new requirements and submit them in a separate submittal. EPA has decided to approve these revisions today in order to strengthen the SIP and conform it to existing requirements during this transition period. EPA has determined, however, that certain statutory changes have immediate effect and may impact Maine's NSR revisions. The paragraphs below summarize these provisions and discuss the impact on Maine's SIP revisions.

1. The Clean Air Act Amendments of 1990 add a new section 302(z) of the Clean Air Act defining the term "stationary source" as any source of an air pollutant except those emissions resulting directly from an internal combustion engine for transportation purposes or from a nonroad engine or nonroad vehicle as defined in section 216. EPA's initial review is that the definition of stationary source in the federal regulations is flexible enough to accommodate the new section 302(z) without requiring regulatory revisions. Chapter 100(71) of Maine's regulations defines the term "source." As implemented, this definition conforms to the new section 302(z) definition in the Clean Air Act Amendments. If in the future, EPA promulgates standards for certain nonroad engines and nonroad vehicles, EPA will require that Maine amend its definition of source to exclude these engines and vehicles as appropriate. Therefore, this change in the Clean Air Act Amendments of 1990 does not immediately impact this SIP revision.

2. The Clean Air Act Amendments of 1990 revise section 169(3) of the Clean Air Act to specify that "clean fuels" should be considered in a BACT analysis, and to provide that a source utilizing clean fuels or any other means to comply with the BACT requirement shall not be allowed to increase above levels that would have been required under section 169(3) prior to the 1990 Amendments. EPA has interpreted the new statutory language regarding clean fuels as merely codifying present practice under the Act, under which clean fuels are an available means of reducing emissions to be considered along with other approaches in identifying BACT-level controls. See

Letter from William G. Rosenberg, Assistant Administrator, to Henry Waxman, Chairman, Subcommittee on Health and the Environment, U.S. House of Representatives, October 17, 1990. Accordingly, EPA believes that no regulatory revisions at this time are necessary in order to implement these statutory changes.

Furthermore, in a letter dated May 1, 1989, the Maine Department of Environmental Protection committed to implementing BACT in accordance with EPA policy and in accordance with the BACT guidance document issued by the Northeast States for Coordinated Air Use Management (NESCAUM) dated October, 1988. NESCAUM's BACT guidance document includes consideration of clean fuels in the BACT analysis.

3. The Clean Air Act Amendments of 1990 revised sections 162(a) and 164(a) of the Clean Air Act to specify that the boundaries of areas designated as class I must conform to all boundary changes in such areas made since August 7, 1977 and any changes that may occur in the future. Prior law was unclear on this point. However, EPA interprets the current regulations at 40 CFR 51.166 as being able to accommodate these statutory changes, and no regulatory revisions are necessary at this time in order to implement these changes. For a discussion of EPA's policy regarding the implementation of the boundary change, see Memorandum, "New Source Review Program Transitional Guidance," from John S. Seitz, Director, Office of Air Quality Planning and Standards, March 11, 1991. The State of Maine has 3 class I areas which include the following: Moosehorn National Wildlife Refuge, Roosevelt-Campobello International Park and Acadia National Park. Roosevelt-Campobello International Park and Acadia National Park have expanded their boundaries since 1977 and anticipate further expansion in the future.

Chapter 114(I)(C) of Maine's regulations states the following: "The Board hereby recognizes the classification and regulatory requirements of those federal lands which have been established as mandatory class I areas by the federal Clean Air Act: Acadia National Park located in the Downeast and Central Maine Air Quality Regions; Moosehorn National Wildlife Refuge located in the Downeast Air Quality Region; the Roosevelt Campobello International Park located in New Brunswick, Canada, and the Presidential Range Dry River Wilderness and Great Gulf Wilderness or the White Mountain National Forest in New Hampshire." EPA interprets the phrase "recognizes lands which have been established as mandatory class I areas by the federal Clean Air Act" to include all lands (including land acquired after 1977 and in the future). EPA has informed the Maine DEP of the class I area boundary changes and Maine concurs with EPA's interpretation of Chapter 114.

4. Title III of the Clean Air Act Amendments of 1990 added a new section 112(b)(6) that excludes the hazardous air pollutants listed in section 112(b)(1) of the revised Act (as well as any pollutants that may be added to the list) from the PSD (and other) requirements of part C. Thus, because they are on the initial title III hazardous air pollutants list, the following pollutants are now exempt from federal PSD applicability: Arsenic, asbestos, benzene (including benzene from gasoline), beryllium, mercury, radionuclides (including radon and polonium) and vinyl chloride. The title III exemption applies to final federal PSD permits issued on or after November 15, 1990. For federal PSD permit applications now under review, PSD permit requirements do not apply to those pollutants listed under title III.

Note that pursuant to section 116 and the preservation clause in section 112(d)(7) of the amended Act, states with an approved PSD program may continue to regulate the title III hazardous air pollutants now exempted from federal PSD, if the state PSD regulations provide an independent basis to do so. These state rules would remain in effect unless a state revised them to provide similar exemptions. Additionally, the title III pollutants continue to be subject to any other applicable state and federal rules; the exclusion is only for part C requirements.

Maine's regulations include the following pollutants which are now exempt from federal PSD applicability: Asbestos, beryllium, mercury, and vinyl chloride. The Maine DEP is currently regulating these pollutants under the PSD program and will continue to do so until the state implements a hazardous air pollutants program. Note that the definition of "significant emissions" in Maine's regulations also include any emission rate of a regulated pollutant not listed in the definition of significant emissions. Regulated pollutants include pollutants regulated by the state or EPA.

EPA has evaluated these provisions of the Clean Air Act Amendments of 1990 and their impact on Maine's NSR SIP revisions in a memorandum entitled "Technical Support Document—Impact of New Source Review Provisions in the Clean Air Act Amendments of 1990 which May Have an Immediate Effect on Maine's Licensing Regulations," dated January 28, 1992. With respect to the statutory changes discussed above, EPA plans to undertake national rulemaking in the near future to adopt clarifying changes to its regulations. Upon final adoption of those regulations, EPA will call upon states with approved NSR and PSD programs, including Maine, to make any necessary corresponding changes in their SIPs.

Final Action

EPA is approving revisions to Maine's SIP which include the following regulations: Chapter 100 "Definitions" (except for Chapter 100(76) which is being approved in section II of this notice), Chapter 110 "Ambient Air Quality Standards" (except for Chapter 110(2) which is being approved in section II of this notice), Chapter 113 "Growth Offset Regulation," Chapter 114 "Classification of Air Quality Control Regions" (except for Chapter 114(II) and (III) which are being approved in section II of this notice), Chapter 115 (formerly Chapter 108) "Emission License Regulations," Chapter 116 "Prohibited Dispersion Techniques," portions of Chapter 1 "Regulations for the Processing of Applications," and Chapter 6 (Maine's NSR SIP narrative) "Review of New Sources and Modifications." These revisions incorporate the federal NSR/PSD requirements for general preconstruction permitting for all sources and the PSD and NSR provisions for major stationary sources and major modifications in attainment and nonattainment areas in 40 CFR 51.160 through 51.166, the stack height and dispersion techniques requirements of 40 CFR 51.100 as amended on June 8, 1985, the portions of the visibility protection provisions of 40 CFR 51.300 through 51.307, PM_{10} PSD provisions, and associated definitions. Pursuant to Maine's request (in its original submittal letter dated August 22, 1988), EPA is withdrawing Chapter 108 from the existing SIP regulations and is replacing it with Chapter 115.

Maine's revisions meet the visibility protection monitoring and NSR provisions of 40 CFR 51.305 and 51.307, which are addressed in the FIP requirements at 40 CFR 52.26 and 52.27, but not all provisions of 40 CFR 51.306, which are addressed in FIP requirements at 40 CFR 52.29, and 40 CFR 51.302. Therefore, EPA is revising those FIP provisions incorporated into Maine's SIP at 40 CFR 52.1033 by deleting the current subsections (a) and (b) and inserting the following text: "The requirements of section 169A of

the Act are not met because the plan does not include approvable procedures for meeting all of the requirements of 40 CFR 51.302 or 51.306 for the protection of visibility in mandatory class I Federal areas." Regulations for long-term visibility strategies in 40 CFR 52.29 which were previously incorporated and made a part of the applicable plan for the State of Maine in 40 CFR 52.1033(c) will remain in effect.

Under section 307(b)(1) of the Clean Air Act, petitions for judicial review of the action taken under section I of this notice must be filed in the United States Court of Appeals for the appropriate circuit by May 24, 1993. Filing a petition for reconsideration by the Administrator of this final rule does not affect the finality of this rule for the purposes of judicial review nor does it extend the time within which a petition for judicial review may be filed, and shall not postpone the effectiveness of such rule or action. This action may not be challenged later in proceedings to enforce its requirements. (See section 307(b)(2).)

II. PM_{10} Standards, TSP Standards—Deletion, TSP Redesignation, Miscellaneous Revisions, and VOC Definition—Direct Final Rulemaking Notice

On October 31, 1989, the Maine DEP formally submitted these amended regulations to EPA as revisions to its SIP. The revisions include changes to Chapter 110 "Ambient Air Quality Standards," and Chapter 114 "Classification of Air Quality Control Regions." This submittal also included a revised version of Chapter 6 of narrative portion of the Maine SIP entitled "Review of New Sources and Modifications." With these revisions combined with the revisions in section I of this notice, Maine's SIP would satisfy Group III area requirements to adopt PM_{10} air quality standards, to incorporate the new standards into preconstruction review and permitting regulations, to establish a PM_{10} monitoring network, and to define any terms the revised SIP uses to implement the new standards. Lastly, the Maine DEP revised its definition of VOC since EPA's proposal. Therefore, EPA is taking a direct final action on the definition of VOC in section II of this preamble.

A. Particulate Matter Standard

Maine's August 22, 1988 NSR and related requirements SIP submittal, which EPA proposed to approve on July 7, 1989, contained both PM_{10} and TSP ambient air quality standards. The Maine DEP proposed the new PM_{10} standards and proposed to delete the TSP standards and held extensive hearings. The Maine Attorney General's Office advised the Maine DEP, however, that only the state legislature had authority to make changes to ambient air quality standards. The Maine DEP proposed legislation to delete the TSP standards and adopt the federal PM_{10} NAAQS. On may 10, 1989, the full Maine legislature adopted regulations which dropped the former TSP standards, but which also revised the annual PM_{10} ambient air quality standard to one more stringent than the federal NAAQS. The state standard is 40 ug/m^3 annual arithmetic mean, whereas the federal standard is 50 ug/m$_3$ annual arithmetic mean. Subsequently, the following changes were made to the Maine DEP's regulations.

The Maine DEP deleted the 24-hour and annual TSP standards at Chapters 110(2)(A) and (2)(C) of Maine's regulations. The Maine DEP revised the annual PM_{10} ambient air quality standard at Chapter 110(2)(B). The Maine DEP deleted the standard of 50 ug/m^3 (expected annual arithmetic mean concentration, as determined in accordance with appendix K of 40 CFR part 50.) In addition, the Maine DEP made a minor revision to the 24-hour PM_{10} ambient air quality standard to make the language consistent with the language in the federal standard.

Section 116 of the Act reserves the states the right to adopt any standard or limitation respecting emissions of air pollutants, provided they are at least as stringent as the corresponding federal standard. This authority appears to cover "ambient air quality standards" as described in section 109 of the Act. Further, nothing in sections 109 or 110 of the Act, regulating the development of national ambient air quality standards and SIP development and approvals, appears to give EPA the authority to disapprove a more stringent state ambient standard. This is especially so where, as here, the state standard and measures designed to implement it bear a reasonable relationship to efforts towards attainment of the federal PM_{10} standard. Under section 110, EPA cannot disapprove Maine's SIP revision for reasons not enumerated in the Act; therefore, EPA will approve Maine's more stringent PM_{10} ambient air quality standard. See *Train* v. *NRDC*, 421 U.S. 60, 98 (1975). Therefore, EPA is approving Maine's PM_{10} standard.

The Maine DEP deleted Chapter 114(II)(B) which listed areas classified as nonattainment for TSP. This deletion is consistent with Maine's request to redesignate its TSP nonattainment areas to unclassified.

Note that the Maine DEP has removed the nonattainment designation for Millinocket for sulfur dioxide (SO_2) from Chapter 114. EPA has not approved a redesignation request for Millinocket and it is still designated as a primary SO_2 nonattainment area in 40 CFR 81.320. Although EPA is approving Maine's current version of Chapter 114, this action in no way changes the federal designation for Millinocket in 40 CFR part 81 as a nonattainment area for SO_2.

In Chapter 6 of Maine's narrative to its NSR Regulations the Maine DEP made various changes to make it consistent with the revised PM_{10} standards as well as made some insignificant changes to correct references. These changes are consistent with the Maine DEP's SIP revision request.

Maine's particulate matter regulations and EPA's evaluation are detailed in a memorandum entitled "Technical Support Document—Maine's PM_{10} Regulations and Request for Redesignation of TSP Area," dated January 22, 1990. Copies of that memorandum are available, upon request, from the EPA Regional Office listed in the ADDRESSES section of this notice.

B. VOC Definition

Since publication of EPA's NPR, the Maine DEP amended its definition of VOC in Chapter 100 to exclude four additional compounds which EPA has already determined to have negligible photochemical reactivity. The four compounds are the following: Dichlorotrifluoroethane (HCFC–123), tetrafluoroethane (HFC–134a), dichlorofluoroethane (HCFC–141b), and chlorodifluoroethane (HCFC–142b). The Maine DEP submitted this revised definition on October 27, 1989.

C. Clean Air Act Amendments of 1990

EPA has reviewed the revisions in section II of this preamble for conformance with the provisions of the 1990 Clean Air Act Amendments enacted on November 15, 1990. If additional changes are necessary to Maine's nonattainment area NSR regulations, Maine will be required to adopt applicable changes and submit them to EPA in a separate submittal by the deadline. EPA has decided to approve these revisions today in order to strengthen the SIP and conform it to existing requirements during this transition period.

EPA is approving these portions of the SIP submittal without prior proposal because the Agency views these as noncontroversial amendments to conform Maine's SIP to existing federal

regulations and anticipates no adverse comments. This action will be effective May 24, 1993 unless, by April 22, 1993, notice is received that adverse or critical comments will be submitted on this specific portion of EPA's approval. If such notice is received, action on these portions will be withdrawn before the effective date by simultaneously publishing two subsequent notices. One notice will withdraw the final on these portions of the rulemaking. The other will begin a new rulemaking by announcing a proposal of the action and establishing a comment period. If no such comments are received, the public is advised that the action on these portions of the rulemaking will be effective on May 24, 1993.[2]

Final Action

EPA is approving the revised 24-hour PM_{10} standard and the more stringent annual PM_{10} standard in Chapter 110(2). EPA is also approving the deletion of the TSP standard in Chapter 110(2) and deletion of the nonattainment classifications for the TSP areas in Maine in Chapter 114(II) and (III). EPA is approving the revised definition of VOC in Chapter 100(76). Lastly, EPA is approving Maine's request to redesignate the following areas from secondary TSP nonattainment areas to areas which "cannot be classified": Augusta, Lincoln, Bangor/Brewer, and Baileyville.[3]

Under section 307(b)(1) of the Clean Air Act, petitions for judicial review which may be allowed by law of the action taken under section II of this preamble must be filed in the United States Court of Appeals for the appropriate circuit by May 24, 1993. Filing a petition for reconsideration by the Administrator of this final rule does not affect the finality of this rule for the purposes of judicial review nor does it extend the time within which a petition for judicial review may be filed, and shall not postpone the effectiveness of such rule or action. This action may not be challenged later in proceedings to enforce its requirements. (See section 307(b)(2).)

Under the Regulatory Flexibility Act, 5 U.S.C. 600 *et seq.*, EPA must prepare a regulatory flexibility analysis assessing the impact of any proposed or final rule on small entities. 5 U.S.C. 603 and 604. Alternatively, EPA may certify that the rule will not have a significant impact on a substantial number of small entities. Small entities include small businesses, small not-for-profit enterprises, and government entities with jurisdiction over populations of less than 50,000.

SIP approvals under section 110 and subchapter I, part D of the CAA do not create any new requirements, but simply approve requirements that the State is already imposing. Therefore, because the federal SIP-approval does not impose any new requirements, I certify that it does not have a significant impact on any small entities affected. Moreover, due to the nature of the federal-state relationship under the CAA, preparation of a regulatory flexibility analysis would constitute federal inquiry into the economic reasonableness of state action. The CAA forbids EPA to base its actions concerning SIPs on such grounds. *Union Electric Co.* v. *U.S. E.P.A.*, 427 U.S. 246, 256–66 (S.Ct. 1976); 42 U.S.C. 7410(a)(2).

The Office of Management and Budget has exempted this rule from the requirements of section 3 of Executive Order 12291.

List of Subjects

40 CFR Part 52

Air pollution control, Carbon monoxide, Hydrocarbons, Incorporation by reference, Intergovernmental relations, Nitrogen dioxide, Ozone, Particulate matter, Reporting and recordkeeping requirements, Sulfur oxides.

40 CFR Part 81

Air pollution control, National parks, Wilderness areas.

Note: Incorporation by reference of the State Implementation Plan for the State of Maine and was approved by the Director of the Federal Register on July 1, 1982.

Dated: December 19, 1992.

William K. Reilly,

Administrator.

Parts 52 and 81 of chapter I, title 40 of the Code of Federal Regulations is amended as follows:

PART 52—[AMENDED]

1. The authority citation for part 52 continues to read as follows:

Authority: 42 U.S.C. 7401–7671q.

Subpart U—Maine

2. Section 52.1020 is amended by adding paragraphs (c)(26) and (c)(27) to read as follows:

§ 52.1020 Identification of plan.

* * * * *

(c) * * *

(26) Revisions to the State Implementation Plan submitted by the Maine Department of Environmental Protection on October 27, 1989.

(i) Incorporation by reference.

(A) Letter from the Maine Department of Environmental Protection dated October 27, 1989 submitting revisions to the Maine State Implementation Plan.

(B) Chapter 100 of the Maine Department of Environmental Protection's Air Regulations entitled "Definitions Regulations," except for the definition of volatile organic compounds in Chapter 100(76) which is being incorporated by reference in 40 CFR 52.1020(c)(27). This regulation was effective in the State of Maine on October 3, 1989. Note, the definition of fuel burning equipment in Chapter 100(29) is not part of Maine's submittal.

(C) Chapter 110 except for Chapter 110(2) which is being incorporated by reference in 40 CFR 52.1020(c)(27), Chapter 113, Chapter 114 except for Chapter 114(II) and (III) which are being incorporated by reference in 40 CFR 52.1020(c)(27), Chapter 115, and Chapter 116 of the Maine Department of Environmental Protection's Air Regulations entitled, "Ambient Air Quality Standards," "Growth Offset Regulation," "Classification of Air Quality Control Regions," "Emission License Regulations," and "Prohibited Dispersion Techniques," respectively. These regulations were effective in the State of Maine on October 25, 1989. Chapter 108, originally approved on January 30, 1980 and February 19, 1980 in paragraphs (c)(10) and (c)(11) of this section, is being withdrawn and replaced with Chapter 115.

(D) Portions of Chapter 1 entitled "Regulations for the Processing of Applications," effective in the State of Maine on February 8, 1984.

(ii) Additional materials.

(A) A State Implementation Plan narrative contained in Chapter 6 entitled "Review of New Sources and Modifications."

(B) Letter dated May 1, 1989 from the Maine Department of Environmental Protection regarding implementation of BACT.

(C) Nonregulatory portions of the state submittal.

(27) Revisions to the State Implementation Plan submitted by the

[2] As noted above, this portion of EPA's approval is intended only to bring Maine's VOC definition into conformity with current regulations. It is not intended to address or invite comments on the reactivity of any other compound for purposes of the VOC definition. Accordingly, should comments be submitted regarding other compounds, EPA will deem them not relevant to today's action, and not a basis to withdraw this action.

[3] Again, EPA's approval of Maine's Chapter 114 does not change the federal designation of Millinocket as a nonattainment areas for SO_2 found at 40 CFR 8' 320.

Maine Department of Environmental Protection on October 31, 1989.

(i) Incorporation by reference.

(A) Letter from the Maine Department of Environmental Protection dated October 31, 1989 submitting revisions to the Maine State Implementation Plan.

(B) The definition of volatile organic compounds in Chapter 100(76) of the Maine Department of Environmental Protection's "Definitions Regulations" effective in the State of Maine on October 3, 1989.

(C) Chapter 110(2) and Chapter 114 (II) and (III) of the Maine Department of Environmental Protection's "Ambient Air Quality Standards" and "Classification of Air Quality Control Regions" Regulations effective in the State of Maine on October 25, 1989. Note that Millinocket remains designated as a nonattainment area for SO_2 until redesignated at 40 CFR 51.320.

(ii) Additional materials.

(A) A State Implementation Plan narrative contained in Chapter 6 entitled "Review of New Sources and Modifications."

(B) Nonregulatory portions of the state submittal.

3. In § 52.1031 Table 52.1031 is amended by adding new entries for "Chapter: 1", "115", and "116"; and by adding new citations to entries "100", "110", "113", and "114" and by removing the entry for "108", to read as follows:

§ 52.1031 EPA-approved Maine regulations.

* * * * *

TABLE 52.1031—EPA APPROVED RULES AND REGULATIONS

State citation	Title/subject	Date adopted by State	Date approved by EPA	Federal Register citation	52.1020	
*	*	*		*	*	*
Chapter:						
1	Regulations for the Processing of Applications.	02/08/84	03/23/93	[Insert FR citation from published date].	(c)(26)	Portions of Chapter 1.
*	*	*		*	*	*
100	Definitions	10/03/89	03/23/93	[Insert FR citation from published date].	(c)(26)	All except for the definition of VOC in Chapter 100(76). Note that this definition is approved in another paragraph below. In addition, Maine withdrew the definition of fuel burning equipment in Chapter 100(29) from its SIP submittal. This definition is approved in another paragraph below.
					(c)(27)	Approval of definition of VOC in Chapter 100 (76) only.
*	*	*		*	*	*
110	Ambient Air Quality Standards.	10/25/89	03/23/93	[Insert FR citation from published date].	(c)(26)	All of Chapter 110 except for Chapter 110(2) which is approved in another paragraph, below. Note that Maine did not submit its Chromium standard in Chapter 110(12) for approval.
					(c)(27)	Chapter 110(2) only.
*	*	*		*	*	*
113	Growth Offset Regulation	10/25/89	03/23/93	[Insert FR citation from published date].	(c)(26)	
*	*	*		*	*	*
114	Designation of Air Quality Control Regions.	10/25/89	03/23/93	[Insert FR citation from published date].	(c)(26)	All except for Chapter 114(II) and (III) which are approved in another paragraph, below.
					(c)(27)	Chapter 114(II) and (III) only.
*	*	*		*	*	*
115	Emission License Regulation.	05/07/79	01/30/80	45 FR 6784	(c)(10)	PSD.
		12/24/79	02/19/80	45 FR 10766	(c)(11)	New Source Review.
		10/25/89	03/23/93	[Insert FR citation from published date].	(c)(26)	Note Maine did not submit references to nonregulated pollutants for approval. Also note that this Chapter was formerly Chapter 108.
*	*	*		*	*	*
116	Prohibited Dispersion Techniques.	10/25/89	03/23/93	[Insert FR citation from published date].	(c)(26)	
*	*	*		*	*	*

4. Section 52.1033 is amended by revising paragraphs (a) and (b); paragraph (c) is republished for the convenience of the reader:

§ 52.1033 Visibility protection.

(a) The requirements of section 169A of the Clean Air Act are not met because the plan does not include approvable procedures for meeting all of the requirements of 40 CFR 51.302 or 51.306 for the protection of visibility in mandatory class I Federal areas.

(b) (reserved)

(c) *Long-term strategy.* The provisions of § 52.29 are hereby incorporated into the applicable plan for the State of Maine.

PART 81—[AMENDED]

1. The authority citation for part 81 continues to read as follows:

Authority: 42 U.S.C. 7401–7642.

2. Section 81.320 is amended by revising the table for "Maine-TSP" to read as follows:

§ 81.320 Maine.

MAINE-TSP

Designated areas	Does not meet primary standards	Does not meet secondary standards	Cannot be classified	Better than national standards
AQCR 107 (Central ME):				
Augusta			X	
Lewiston/Aubum			X	
Rockland			X	
Remainder of AQCR				X
AQCR 109 (Downeast):				
Lincoln			X	
Bangor/Brewer			X	
Baileyville			X	
Remainder of AQCR				X
AQCR 108 (Aroostook)			X	
AQCR 111 (Northwest ME)				X
AQCR 110 (Met. Portland)				X

* * * * *

[FR Doc. 93–6452 Filed 3–22–93; 8:45 am]

BILLING CODE 6560–50–M

---

40 CFR Part 52

[MN07–1–5210; FRL–4527–8]

Approval and Promulgation of Implementation Plans; Minnesota

AGENCY: United States Environmental Protection Agency (USEPA).

ACTION: Direct final rule.

SUMMARY: On March 13, 1989, Minnesota Pollution Control Agency (MPCA) requested that the USEPA approve a revised codification of the State's regulations. Under this request, the recodified regulations, contained in Chapter 7001 and Chapter 7005 of the State Rules, would replace the regulations currently in the SIP, generally either the "APC Series" or the "4000 Series." USEPA is approving the requested recodification.

EFFECTIVE DATE: This action will be effective on May 24, 1993 unless notice is received by April 22, 1993 that someone wishes to submit adverse or critical comments. If the effective date is delayed, timely notice will be published in the **Federal Register**.

ADDRESSES: Copies of the SIP revision and the September 21, 1992, technical support document are available for inspection at the following address: (It is recommended that you telephone John Summerhays at (312) 886–6067, before visiting the Region V office.) U.S. Environmental Protection Agency (AE–17J), Region V, Air Enforcement Branch, 77 West Jackson Blvd., Chicago, Illinois 60604–3590.

Written comments should be sent to: William L. MacDowell, Chief, Regulation Development Section, Air Enforcement Branch (AE–17J), U.S. Environmental Protection Agency, 77 West Jackson Boulevard, Chicago, Illinois 60604–3590.

A copy of this revision to the Minnesota SIP is available for inspection at: United States Environmental Protection Agency, Public Information Reference Unit, 401 M Street, SW., Washington, DC 20460.

FOR FURTHER INFORMATION CONTACT: John Summerhays, Air Enforcement Branch (AE–17J), United States Environmental Protection Agency, Region V, Chicago, Illinois 60604–3590, (312) 886–6067.

SUPPLEMENTARY INFORMATION: On March 13, 1989, MPCA requested that the USEPA approve a revised codification of the State's regulations. Under this request, the recodified regulations, contained in Chapter 7001 and Chapter 7005 of the State Rules, would replace the regulations currently in the SIP, generally either the "APC Series" or the "4000 Series." The recodified regulations were formally submitted on November 26, 1991 (representing Chapter 7005 regulations as of November 1991), and September 18, 1992 (representing Chapter 7001 regulations as of September 1992).

Contents of State Implementation Plan (SIP)

The State's original SIP included a submittal dated January 28, 1972, along with amendments submitted by the State on April 28, 1972. These submittals included rules identified as APC 1 through APC 16. USEPA published its approval of this Plan in the May 31, 1972 **Federal Register** (37 FR 10842). Additionally, amendments to APC 3 were submitted on July 25, 1972, and approved in the March 2, 1976 **Federal Register** (41 FR 8956). The State then submitted APC 33 on January 16, 1981, and submitted amendments to several of the rules in the original SIP and several new rules on January 23, 1981. New rules contained in these submittals included APC 17 through APC 33 and APC 39. The particulate matter portion of these submittals was approved on May 6, 1982, at 47 FR 19520, except that APC 29 was conditionally approved on that date. The State submitted amendments to APC 33 on November 17, 1981. These amendments and the portion of the January 23, 1981, submittal addressing criteria pollutants other than particulate

matter were approved in the June 21, 1982, **Federal Register** (47 FR 26623). A consolidated permit rule and supplemental rules, codified as 6 MCAR 4.0002, 6 MCAR 4.4001 through 4.4021, and 6 MCAR 4.4301 through 4.4305, were submitted on January 7, 1985. Revised indirect source permitting rules, codified as 6 MCAR 4.4311 through 4.4321 were also submitted on that date. These rules were approved by USEPA in the May 13, 1988 **Federal Register** (53 FR 17033). A revised version of APC 29, codified as Rules 7005.2520 through 7005.2523, was approved recently.

In addition to regulations, the SIP contains other material, including other documents limiting source emissions, commitments by the State for processing of new source permits and for transportation control planning, and other supplemental material concerning the State's Plan for attaining and maintaining ambient air quality standards. However, these elements of the SIP are not rules subject to recodification; therefore these SIP elements are not subject to rulemaking in this action.

Review of Recodified Rules

For most rules, no differences were found between the recodified regulations and the SIP regulation other than changes in rule numbering, changes in citations to other rule provisions, and a change from the term "director" to the term "commissioner." SIP regulations found to have essentially identical recodified regulations or recodified regulations with only nonsubstantive modifications include APC 6, APC 7, APC 9, APC 10, APC 11, APC 12, APC 14, APC 18, APC 19, APC 21, APC 22, APC 23, APC 25, APC 26, APC 28, APC 32, and APC 39. Also, APC 29 has already been approved in its recodified form, and thus need not be addressed in this rulemaking. The former APC 20 was never submitted to USEPA, was subsequently repealed, and therefore does not exist as either a State or Federal regulation.

For some rules, the rules which apply at a State level reflect substantive differences from the rules which have been approved as part of the SIP. For one set of rules, including APC 2, APC 3, and APC 33, USEPA approved only part of the rules. For a second set of rules (including some rules from the first set), the State revised the rule but USEPA has not done rulemaking on the revision. This set of rules includes APC 1, APC 2, APC 3, APC 5, and APC 8. Each rule in both sets of rules are discussed individually below.

A further set of rules represent State equivalents of Federal regulations, either new source performance standards or national emissions standards for hazardous air pollutants. State rules meeting this description include APC 17, APC 27, APC 30, and APC 31. USEPA has not approved these regulations in the past, since the State has been delegated the authority to enforce the the Federal regulations, and little purpose would be served by approving essentially duplicate State rules. For similar reasons, USEPA has not approved Rules APC 4, APC 13, APC 15, APC 16, and APC 24 with respect to "new" sources that are covered by Federal new source performance standards, although these rules are approved as applied to other sources. Since the State's recodification request applies only to the approved SIP, the SIP continues to exclude these regulations as they apply to "new" sources covered by the new source performance standards.

Review of Modified Rules

In comparison to the SIP rule APC 1, pertaining to air quality standards, Rules 7005.0010 to 7005.0080 include several new provisions. Rule 7005.0030 provides that the State will not impose a penalty on a source that is in compliance with the emissions limits for a particular pollutant in a State permit or stipulation agreement even if that source causes or contributes to an air quality standard violation for that pollutant. Rule 7005.0040 provides nevertheless that other actions may be taken to address air quality standard violations. Rule 7005.0050 adds appropriate methods for measuring ambient air quality. Rule 7005.0060 provides for the MPCA to judge the approvability of methods for measuring hydrogen sulfide, an air quality standard which exists only at the State level. Rule 7005.0070 provides a compliance deadline for selected air quality standards which is no longer relevant. Rule 7005.0080 has been changed toward closer conformity with the National Ambient Air Quality Standards.

USEPA is concerned that Federal approval of Rule 7005.0030 might limit USEPA enforcement options based on unreviewed State actions, i.e. that USEPA would be prohibited from seeking penalties from a source that is causing air quality standard violations but is complying with a State permit or stipulation agreement. USEPA is also concerned that approval of Rule 7005.0040 might be interpreted to restrict allowable federal actions in cases of air quality violations. In addition, the State did not request approval of this pair of rules but instead asked for recodification of rules already in the SIP (which does not include these two rules). Consequently, these two rules are not approved in today's action as part of the SIP. However, USEPA is today approving the other rules that replace the former APC 1, i.e. Rules 7005.0010, 7005.0020, 7005.0050, 7005.0060, 7005.0070, and 7005.0080.

Rule APC 2 was included in the State's original SIP, and a revised version was approved by USEPA in the May 6, 1982 **Federal Register** (47 FR 19520). An additional revision codified as 6 Minnesota Code of Administrative Regulations 4.0002 (6 MCAR 4.0002) was approved by USEPA in the May 13, 1988 **Federal Register** (53 FR 17033), except that USEPA did not approve paragraph D (Opacity Standard Adjustment). The five paragraphs of this regulation have been recodified as Rules 7005.0100, 7005.0110, 7005.0115, 7005.0116, and 7005.0117. The current State rules reflect subsequent revisions to Rules 7005.0100 and 7005.0116, which were submitted as part of the offset rule revisions but ultimately withdrawn from USEPA consideration. USEPA is today approving the recodification of the previously approved portions of 6 MCAR 4.0002, i.e. Rules 7005.0100, 7005.0110, 7005.0115, and 7005.0117. Rule 7005.0116 (the recodified version of paragraph D) and the withdrawn revisions to Rule 7005.0100 are not included in the approved SIP.

Rule APC 3 was also included in the State's original SIP, and amendments were approved in the March 2, 1976 **Federal Register** (41 FR 8956). A revised version was codified as 6 MCAR 4.4001 through 4.4021 plus 6 MCAR 4.4301 through 4.4305. With the exception of disapproval for certain categories of small sources of the exemption in Rule 6 MCAR 4.4303 paragraph B (small sources covered by new source performance standards), these rules were approved by USEPA in the May 13, 1988 **Federal Register** (53 FR 17033). The present State rules reflect relatively minor revisions to Rules 7001.0020 and 7001.1200 through 7001.1220, such as replacement of the term "emissions facility" with the phrase "emissions unit, emissions facility, or stationary source." USEPA is today approving the recodified rules, except for the exemptions in Rule 7001.1210 subpart 2 in the case of small sources covered by new source performance standards.

The only noteworthy difference between Rule APC 5 and Rules 7005.0450 through 7005.0520 is to

change the basis of the emissions limits from "standard cubic foot" to "dry standard cubic foot." USEPA believes that the test methods used for these limits have always provided these data on a dry basis. (Otherwise, this change would generally be a tightening of the limits.) Therefore, USEPA is today approving this clarification.

In comparison to Rule APC 8, generally prohibiting open burning, Rules 7005.0700 through 7005.0820 differ only insofar as they clarify when cities may apply for permission to allow certain types of open burning and clarify when open burning of diseased shade trees is to be permitted. USEPA is today approving the full set of recodified rules.

Rule 6 MCAR 4.0033 (sometimes referred to as APC 33) is recodified without change as Rules 7005.2850 through 7005.2930. USEPA approved most of 6 MCAR 4.0033, but did not approve section G, based on concerns about authorizing alternate test methods without requirement for USEPA approval. USEPA is today approving Rules 7005.2850 through 7005.2900 and Rules 7005.2920 and 7005.2930, which are recodified versions of the previously approved rules. Rule 7005.2910, which is the recodified version of section G of 6 MCAR 4.0033, continues to be excluded from the SIP.

Because USEPA considers today's action noncontroversial and routine, we are approving it today without prior proposal. The action will become effective on May 24, 1993. However, if we receive notice by April 22, 1993, that someone wishes to submit critical comments, then USEPA will publish: (1) A notice that withdraws the action; and (2) a notice that begins a new rulemaking by proposing the action and establishing a comment period.

Nothing in this action should be construed as permitting or allowing or establishing a precedent for any future request for revision to any SIP. Each request for revision to the SIP shall be considered separately in light of specific technical, economic, and environmental factors and in relation to relevant statutory and regulatory requirements.

This action has been classified as a Table Three action by the Regional Administrator under the procedures published in the **Federal Register** on January 19, 1989, (54 FR 2214–2225). On January 6, 1989, the Office of Management and Budget (OMB) waived Table Two and Three SIP revisions (54 FR 2222) from the requirements of section 3 of Executive Order 12291 for a period of 2 years.

Under the Regulatory Flexibility Act, 5 U.S.C. 600 *et seq.*, USEPA must prepare a regulatory flexibility analysis assessing the impact of any proposed or final rule on small entities. 5 U.S.C. 603 and 604. Alternatively, USEPA may certify that the rule will not have a significant impact on a substantial number of small entities. Small entities include small business, small not-for-profit enterprises, and government entities with jurisdiction over populations of less than 50,000.

SIP approvals under section 110 and subchapter I, part D of the CAA do not create any new requirements, but simply approve requirements that the State is already imposing. Therefore, because the federal SIP-approval does not impose any new requirements, I certify that it does not have a significant impact on any small entities affected. Moreover, due to the nature of the federal-State relationship under the CAA, preparation of a regulatory flexibility analysis would constitute federal inquiry into the economic reasonableness of State action. The CAA forbids USEPA to base its actions concerning SIPs on such grounds. *Union Electric Co.* v. *U.S. E.P.A.*, 427 U.S. 246, 256–266 (S.Ct. 1976); 42 U.S.C. 7410(a)(2).

The Agency has reviewed this request for revision of the federally approved State Implementation Plan for conformance with the provisions of the 1990 Amendments enacted on November 15, 1990. The Agency has determined that this action conforms with those requirements irrespective of the fact that the submittal preceded the date of enactment.

Under section 307(b)(1) of the Clean Air Act, petitions for judicial review of this action must be filed in the United States Court of Appeals for the appropriate circuit by May 24, 1993. Filing a petition for reconsideration by the Administrator of this final rule does not affect the finality of this rule for the purposes of judicial review nor does it extend the time within which a petition for judicial review may be filed, and shall not postpone the effectiveness of such rule or action. This action may not be challenged later in proceedings to enforce its requirements. (See section 307(b)(2).)

List of Subjects in 40 CFR Part 52

Air Pollution control, Carbon monoxide, Hydrocarbons, Incorporation by reference, Intergovernmental relations, Lead, Nitrogen dioxide, Ozone, Particulate matter, Reporting and recordkeeping requirements, Sulfur oxides, Volatile organic compounds.

Note—Incorporation by reference of the State Implementation Plan for State of Minnesota was approved by the Director of the Federal Register on July 1, 1982.

Dated: September 25, 1992.

Valdas V. Adamkus,

Regional Administrator.

Title 40 of the Code of Federal Regulations, chapter I, part 52, is amended as follows:

PART 52—APPROVAL AND PROMULGATION OF IMPLEMENTATION PLANS

1. The authority citation for part 52 continues to read as follows:

Authority: 42 U.S.C. 7401–7671q.

2. Section 52.1220 is amended by adding new paragraph (c)(26) to read as follows:

§ 52.1220 Identification of plan.

* * * * *

(c) * * *

(26) On March 13, 1989, the State of Minnesota requested that EPA revise the referencing of regulations in the SIP to conform to the State's recodification of its regulations. On November 26, 1991, and September 18, 1992, the State submitted an official version of the recodified regulations to be incorporated into the SIP. The recodified regulations are in Chapter 7001 and Chapter 7005 of Minnesota's regulations. Not approved as part of the SIP are recodified versions of regulations which EPA previously did not approve. Therefore, the SIP does not include Rules 7005.1550 through 7005.1610 (National Emission Standards for Hazardous Air Pollutants (NESHAP) for asbestos), Rules 7005.2300 through 7005.2330 (limits for iron and steel plants), Rules 7005.2550 through 7005.2590 (NESHAP for beryllium), Rules 7005.2650 through 7005.2690 (NESHAP for mercury), Rule 7005.0116 (Opacity Standard Adjustment) and Rule 7005.2910 (Performance Test Methods for coal handling facilities). Similarly, the SIP continues to exclude the exemption now in Rule 7001.1210 as applied to small sources subject to new source performance standards, and the SIP is approved only for "existing sources" in the case of Rules 7005.1250 through 7005.1280 (Standards of Performance for Liquid Petroleum Storage Vessels), Rules 7005.1350 through 7005.1410 (Standards of Performance for Sulfuric Acid Plants), Rules 7005.1450 through 7005.1500 (Standards of Performance for Nitric Acid Plants), and Rules 7005.2100 through 7005.2160 (Standards of Performance for Petroleum Refineries). The SIP also does not include changes in the State's Rule 7005.0100 (relating to

offsets) that were withdrawn by the State on February 24, 1992, and does not include the new rules 7005.0030 and 7005.0040.

(i) Incorporation by reference.

(A) Minnesota regulations in Chapter 7005 as submitted November 26, 1991, and in Chapter 7001 as submitted September 18, 1992, except for those regulations that EPA has not approved as identified above.

3. Section 52.1222 is added to read as follows:

§ 52.1222 EPA-approved Minnesota State regulations.

The following table identifies the State regulations submitted to and approved by EPA as revisions to the Minnesota State Implementation Plan. This table is for informational purposes only and does not have any independent regulatory effect. To determine regulatory requirements for a specific situation consult the plan identified in § 52.1220. To the extent that this table conflicts with § 52.1220, § 52.1220 governs.

TABLE 52.1222.—EPA-APPROVED REGULATIONS

Minnesota rule Nos.	Rule description	Old rule No.	Contents of SIP
7005.0010–0080	Air Quality Standards	APC 1	All rules except 7005.0030 and 7005.0040.
7005.0100–0117	General Provisions	6 MCAR 4.0002	All except 7005.0116 and changes to 7005.0100 since 1985.
7001.0010–0210	Consolidated Permit Rule	6 MCAR 4.4001–4.4021	All rules.
7001.1200–1220	Supplement to Consolidated Permit Rule	6 MCAR 4.4301–4.4305	All rules for most sources.[1]
7005.0300–0400	Limits for Combustion Sources	APC 4	All rules for "existing" sources.[2]
7005.0450–0520	Limits for Process Sources	APC 5	All rules.
7005.0550	Fugitive Particulate Control	APC 6	All rules.
7005.0600–0650	Limits for Incinerators	APC 7	All rules.
7005.0700–0820	Opening Burning Rules	APC 8	All rules.
7005.0900–0960	Ambient Odor Control	APC 9	All rules.
7005.1000–1040	Limits for Animal Matter Odors	APC 10	All rules.
7005.1100–1130	Limits on Visible Emissions	APC 11	All rules.
7005.1150–1200	Limits on Visible Emissions from Vehicles	APC 12	All rules.
7005.1250–1280	Gasoline Storage Tank Rules	APC 13	All rules for "existing" sources.[2]
7005.1300–1320	Limits on Acid, Base Emissions	APC 14	All rules.
7005.1350–1410	Limits on Sulfuric Acid Plants	APC 15	All rules for "existing" sources.[2]
7005.1450–1500	Limits on Nitric Acid Plants	APC 16	All rules for "existing" sources.[2]
7005.1650–1660	Limits for Inorganic Fibers	APC 18	All rules.
7001.1250–1350	Indirect Source Permits	6 MCAR 4.4311–4.4321	All rules.
7005.1850–1880	Source Testing, Reporting, Malfunctions	APC 21	All rules.
7005.1900–1950	Limits for Portland Cement Plants	APC 22	All rules.
7005.2000–2040	Limits for Asphalt Concrete Plants	APC 23	All rules.
7005.2100–2160	Limits for Petroleum Refineries	APC 24	All rules for "existing" sources.[2]
7005.2200–2230	Limits for Secondary Lead Smelters	APC 25	All rules.
7005.2250–2280	Limits for Secondary Brass/Bronze Plants	APC 26	All rules.
7005.2350–2400	Limits for Sewage Sludge Incinerators	APC 28	All rules.
7005.2520–2523	Limits for Grain Handling Facilities	APC 29	All rules.
7005.2750–2790	Limits for Direct Heating Equipment	APC 32	All rules.
7005.2850–2930	Limits for Coal Handling Facilities	APC 33	All rules except 7005.2910.
7005.2950–3006	Emergency Episode Rules	APC 39	All rules.

[1] Exemptions as applied to small sources subject to new source performance standards are not approved.
[2] "Existing" sources are sources other than those subject to a new source performance standard.

[FR Doc. 93-6449 Filed 3-22-93; 8:45 am]
BILLING CODE 6560-50-M

40 CFR Part 761

[OPPTS-66016; FLR 4080-1]

Polychlorinated Biphenyls; Use of Waste Oil

AGENCY: Environmental Protection Agency (EPA).

ACTION: Final rule; technical amendment.

SUMMARY: EPA issued a final rule on polychlorinated biphenyls (PCBs); exclusions, exemptions and use authorizations which was published in the **Federal Register** of June 27, 1988 (53 FR 24206; TSCA Docket No. OPTS-62053A). Among other things, that rule prohibited the use of waste oil containing any detectable level of PCBs (i.e., PCB concentration of 2 ppm or greater), but authorized the marketing and burning of used oil with a PCB concentration below 50 ppm for purposes of energy recovery by referencing the Resource Conservation and Recovery Act (RCRA) requirements in 40 CFR 266.40, subpart E. The RCRA requirements have been revised and the referenced requirements have been moved from 40 CFR 266.40, subpart E to 40 CFR 279.60, subpart G and 279.70, subpart H (57 FR 41566, September 10, 1992). This technical amendment replaces the references in § 761.20(e) to reflect the current designations and makes other minor language changes to ensure continuance of TSCA coverage in light of the recent RCRA amendments.

EFFECTIVE DATE: March 23, 1993.

FOR FURTHER INFORMATION CONTACT: Susan B. Hazen, Director, Environmental Assistance Division (TS-799), Office of Pollution Prevention and Toxics, Environmental Protection Agency, rm. E543B, 401 M St., SW., Washington, DC 20460, (202) 554-1404, TDD: (202) 554-0551.

SUPPLEMENTARY INFORMATION: EPA issued a final rule on the use of waste oil which was published in the **Federal Register** on June 27, 1988 (53 FR 24211). Section 761.20(e) of this rule authorized the marketing and burning of used oil with a PCB concentration of 2 ppm or greater, but less than 50 ppm under specified circumstances by referencing the RCRA requirements at 40 CFR 266.40, subpart E. This provision must now be updated to reflect the new designations for used oil burners and marketers appearing at 40 CFR 279.60 and 279.70. This rule amendment amends § 761.20(e) by replacing, where appropriate, the previous 40 CFR part 266 designations with the current 40 CFR part 279 designations. Since the Office of Solid Waste (OSW) has restructured its regulation by identifying the various entities of the used oil marketing/burning universe (e.g., generator, transporter, transfer facility, processor/re-refiner, marketer, burner), the TSCA provision at § 761.20(e)(1)(ii) was revised to ensure that the TSCA provision continues to capture any entity which markets used oil to other used oil marketers. Because this rule makes no changes in the substantive requirements of § 761.20(e), EPA believes that notice and an opportunity for comment are unnecessary. The effective date for this provision has been set to conform to the effective date for the RCRA requirements. EPA finds, for good cause, that the rule should take effect on that date, rather than being delayed for 30 days because the rule does not modify any substantive requirements.

I. Public Record

A public record for the action has been established under docket number "OPPTS-66016." The public record is available for inspection from 8 a.m. to 12 noon, and 1 p.m. to 4 p.m., Monday through Friday, excluding legal holidays. The public record is located in the TSCA Public Docket Room, room G004, Northeast Mall, 401 M St., SW., Washington, DC 20460.

In accordance with the requirements of section 19(a)(3) of TSCA, EPA is issuing the following list of documents, which constitutes the record for this rulemaking. The record includes basic information considered by the Agency in developing this rule. A full list of these materials is available for inspection and copying in the TSCA Public Docket Room.

1. USEPA. 57 FR 41566, September 10, 1992, "Hazardous Waste Management System; Identification and Listing of Hazardous Waste; Recycled Used Oil Management Standards; Final Rule."

2. 40 CFR 279.10 and 279.11. A technical correction related to these provisions and entitled, "Hazardous Waste Management System; Identification and Listing of Hazardous Waste; Recycled Used Oil Management Standards; Final Rule Correction," will be published in the **Federal Register** later this month. This notice will be made a part of the rulemaking record and will be placed in the TSCA public docket (OPPTS-66016).

II. Other Regulatory Requirements

Paperwork Reduction Act

EPA has determined that this rule is not subject to OMB review under the Paperwork Reduction Act. The existing information collection requirements are not altered in any way.

List of Subjects in 40 CFR Part 761

Environmental protection, Hazardous substances, Labeling, Polychlorinated biphenyls, Reporting and recordkeeping requirements.

Dated: March 9, 1993.

Mark Greenwood,
Director, Office of Pollution Prevention and Toxics.

Therefore, 40 CFR part 761 is amended as follows:

PART 761—[AMENDED]

1. The authority citation for part 761 continues to read as follows:

Authority: 15 U.S.C. 2605, 2607, 2611, 2614 and 2616.

2. By revising § 761.20(e)(1)(ii) to read as follows:

§ 761.20 Prohibitions.

* * * * *

(e) * * *

(1) * * *

(ii) Marketers who market off-specification used oil for energy recovery only to other marketers who have notified EPA of their used oil management activities, and who have an EPA identification number where an identification number is required by 40 CFR 279.73. This would include persons who market off-specification used oil who are subject to the requirements at 40 CFR part 279 and the notification requirements of 40 CFR 279.73.

* * * * *

§ 761.20 [Amended]

3. Section 761.20(e) is amended as follows:

a. In paragraph (e) introductory text by replacing the citation "40 CFR part 266, subpart E" with "40 CFR part 279, subparts G and H."

b. In paragraph (e)(1)(iii) by replacing the citations "40 CFR 266.41(b)" and "40 CFR 266.41(b)(2)(iii)(A), (B) and (C)" with "40 CFR 279.61(a)(1) and (2)," and with "40 CFR 279.23," respectively, each place the citations appear.

c. In paragraph (e)(3)(ii)(A) by replacing the citation "40 CFR part 266, subpart E" with "40 CFR part 279, subpart G."

d. In paragraph (e)(4) introductory text by replacing the citations "40 CFR

266.43(b)(6)(i) and (ii)" and "40 CFR 266.44(e)" with "40 CFR 279.72(b), 279.74(a), (b) and (c), and 279.75," and with "40 CFR 279.65 and 279.66," respectively.

e. In paragraph (e)(4)(i) by replacing the citations "40 CFR 266.43(b)(6)(i)" and "40 CFR 266.43(b)(6)(ii)" with "40 CFR 279.72(b) and 279.74(b) and (c)," and with "40 CFR 279.74(a) and (c) and 279.75," respectively.

f. In paragraph (e)(4)(ii) by replacing the citation "40 CFR 266.44(e)" and the reference to "paragraph (e)(3)(iii)" with "40 CFR 279.65 and 279.66" and "paragraph (e)(3)(ii)," respectively.

[FR Doc. 93-6604 Filed 3-22-93; 8:45 am]
BILLING CODE 6560-50-F

GENERAL SERVICES ADMINISTRATION

41 CFR Part 302-11

[FTR Amendment 30]

RIN 3090-AE46

Federal Travel Regulation; Relocation Income Tax (RIT) Allowance Payments for Transfers to, from, and between points in Puerto Rico, the Northern Mariana Islands, or the U.S. Possessions

AGENCY: Federal Supply Service, GSA.

ACTION: Final rule.

SUMMARY: This final rule amends the Federal Travel Regulation (FTR) to provide for payment of a relocation income tax (RIT) allowance to employees who transfer to, from, or between points in Puerto Rico, the Northern Mariana Islands, or the U.S. possessions. This amendment is intended to provide equitable treatment to these transferees by allowing them to receive a RIT allowance payment for taxes incurred on moving expense reimbursements similar to the RIT allowance authorized for transfers within the United States.

EFFECTIVE DATE: This final rule is effective January 1, 1987, and applies to Year 1 covered reimbursements made on or after January 1, 1987.

FOR FURTHER INFORMATION CONTACT: Robert A. Clauson, Transportation Management Division (FBX), Washington, DC 20406, telephone FTS or commercial 703-305-5745.

SUPPLEMENTARY INFORMATION: This rule amends the FTR to allow payment of the RIT allowance to employees who transfer to, from, or between points in the Commonwealth of Puerto Rico, the Commonwealth of the Northern Mariana Islands, or the U.S. possessions. The rule also allows payment to employees in all situations where double taxation occurs.

Puerto Rico RIT allowance

This amendment adjusts the RIT allowance to allow payment for income taxes incurred when an employee relocates to or from a point, or between points, in the Commonwealth of Puerto Rico. Under this modification, the combined marginal tax rate (CMTR) is computed without regard to the Federal marginal tax rate. Therefore, the adjustment to the CMTR for the Federal income tax deduction of State and local income taxes is not a factor in the following CMTR formula to be used in calculating the Puerto Rico RIT allowance:

$X = P + S + L$

Where:

X = CMTR for Year 1 and Year 2
P = Puerto Rico tax rate for Year 1
S = State tax rate for Year 1, when applicable
L = Local tax rate for Year 1

The Year 2 marginal tax rates for Puerto Rico cannot be determined with precision since the Federal Government is not involved in developing Puerto Rico's tax laws. The new CMTR formula, therefore, will be used for both Year 1 and Year 2, and the calculation will not account for any differences that may occur in the Puerto Rico marginal tax rates between years.

The Commonwealth of the Northern Mariana Islands and U.S. possessions RIT allowance

This amendment also recognizes the RIT allowance for employees who move to or from a point, or between points, in the Commonwealth of the Northern Mariana Islands or the U.S. possessions; *i.e.*, Guam, American Samoa, and the U.S. Virgin Islands. These jurisdictions have each adopted a tax system that "mirrors" the Federal tax system (meaning that they impose tax in the same manner and at the same rates as the Federal Government). In all these jurisdictions, either the Commonwealth/possession or the U.S. allows a credit or exclusion to prevent double taxation. Thus, the income tax liability of a Federal employee residing in one of these jurisdictions is equivalent to that of an employee residing in a State that imposes no personal income tax. Accordingly, the RIT allowance paid to these employees will not incorporate any component for the Commonwealth's or the possession's income taxes. The CMTR will be calculated, using the formula for transfers within the United States, based on the Federal marginal tax rate, the State marginal tax rate (when applicable), and the local marginal tax rate, including any local tax incurred in the Commonwealth or the possession, as appropriate.

Double taxation by States

This rule also amends the FTR to consider in the RIT calculation all situations where double taxation by States occurs. Previously, the FTR permitted consideration of double taxation only when the employee was subject to double taxation by two States in the vicinity of the same official station, either the old official station or the new official station. This change is intended to allow consideration of double taxation in all instances, including when both the old official station and new official station claim taxing jurisdiction over the Federal employee. However, for double taxation to exist, both States must claim taxing jurisdiction, and neither may offset for income taxes paid to the other jurisdiction. If either State allows an offsetting adjustment for tax payments to the other State, then double taxation does not exist, and the agency shall use the higher of the two State marginal tax rates in computing the RIT allowance.

The General Services Administration (GSA) has determined that this rule is not a major rule for the purposes of Executive Order 12291 of February 17, 1981, because it is not likely to result in an annual effect on the economy of $100 million or more; a major increase in costs to consumers or others; or significant adverse effects. GSA has based all administrative decisions underlying this rule on adequate information concerning the need for, and consequences of, this rule; has determined that the potential benefits to society from this rule outweigh the potential costs and has maximized the net benefits; and has chosen the alternative approach involving the least net cost to society.

List of Subjects in 41 CFR Part 302-11

Government employees, Income taxes, Relocation allowances and entitlements, Transfers

For the reasons set out in the preamble, 41 CFR part 302-11 is amended to read as follows:

PART 302-11—RELOCATION INCOME TAX (RIT) ALLOWANCE

1. The authority citation for part 302-11 continues to read as follows:

Authority: 5 U.S.C. 5721-5734; 20 U.S.C. 905(a); E.O. 11609, 36 FR 13747, 3 CFR,

1971–1975 Comp., p. 586; E.O. 12466, 49 FR 7349, 3 CFR, 1984 Comp., p. 165.

2. Section 302–11.1 is revised to read as follows:

§ 302–11.1 Authority.

Payment of a relocation income tax (RIT) allowance is authorized to reimburse eligible transferred employees for substantially all of the additional Federal, State, and local income taxes incurred by the employee, or by the employee and spouse if a joint tax return is filed, as a result of certain travel and transportation expenses and relocation allowances which are furnished in kind, or for which reimbursement or an allowance is provided by the Government. Payment of the RIT allowance also is authorized for income taxes paid to the Commonwealth of Puerto Rico, the Commonwealth of the Northern Mariana Islands, and the U.S. possessions in accordance with a decision of the Comptroller General of the United States (67 Comp. Gen. 135 (1987)). The RIT allowance shall be calculated and paid as provided in this part.

3. Section 302–11.5 is amended by revising paragraph (j) to read as follows:

§ 302–11.5 Definitions and discussion of terms.

* * * * *

(j) *Combined marginal tax rate (CMTR).* A single rate determined by combining the applicable marginal tax rates for Federal (or Puerto Rico, when applicable), State, and local income taxes, using formulas provided in § 302–11.8(e)(5).

* * * * *

4. Section 302–11.8 is amended by removing the reference "§ 302–11.8(e)(4)" wherever it occurs in paragraph (e)(2) and adding in its place "§ 302–11.8(e)(5)", by revising paragraph (e)(2)(iv), by redesignating paragraph (e)(4) as paragraph (e)(5), by adding new paragraph (e)(4), and by adding a new paragraph (e)(5)(iii) to read as follows:

§ 302–11.8 Rules and procedures for determining the RIT allowance in Year 2.

* * * * *

(e) * * *

(2) * * *

(iv) An employee may incur a State income tax liability on moving expense reimbursements in more than one State at the same or different marginal tax rates (*i.e.*, double taxation). For example, an employee may incur taxes on moving expense reimbursements in one State because of residency in that State, and in another State because that particular State taxes income earned within its jurisdiction irrespective of whether the employee is a resident. In such cases, a single State marginal tax rate must be determined for use in the CMTR formulas in paragraph (e)(5) of this section. The general rules in paragraph (e)(2)(iv) (A) through (C) of this section apply in determining the applicable single State marginal tax rate in such cases.

(A) If two or more States impose an income tax on an employee's moving expense reimbursement, but no two States tax the same portion of the reimbursement, then the reimbursement is not subject to double taxation. In this situation, the average of the applicable State marginal tax rates, as determined under paragraphs (e)(2) (i) through (iii) of this section, shall be treated as being imposed on the entire reimbursement, and shall be used in the CMTR formula.

(B) If two or more States impose an income tax on the moving expense reimbursement, and more than one State taxes the same portion of the reimbursement, but those States allow an adjustment or credit for income taxes paid to the other State(s), then the reimbursement is not subject to double taxation. In this situation, the highest of the applicable State marginal tax rates, as determined under paragraphs (e)(2) (i) through (iii) of this section, shall be used in the CMTR formula.

(C) If two or more States impose an income tax on the moving expense reimbursement, and more than one State taxes the same portion of the reimbursement without allowing an adjustment or credit for income taxes paid to the other, then the reimbursement is subject to double taxation. In this situation, the sum of the applicable State marginal tax rates, as determined under paragraphs (e)(2) (i) through (iii) of this section, shall be used in the CMTR formula.

* * * * *

(4) *Marginal tax rates for the Commonwealth of Puerto Rico, the Commonwealth of the Northern Mariana Islands, and the U.S. possessions.*—(i) *The Commonwealth of Puerto Rico.* A Federal employee who is relocated to or from a point, or between points, in the Commonwealth of Puerto Rico may be subject to income tax on the employee's salary (including moving expense reimbursements) by both the U.S. Government and the government of Puerto Rico. However, under the current law of Puerto Rico, such employee receives a credit on his/her Puerto Rico income tax for the amount of taxes paid to the United States. The rules in paragraphs (e)(4)(i) (A) through (C) apply in determining the marginal tax rate applicable for transfers to, from, or between points in Puerto Rico.

(A) The applicable Puerto Rico marginal tax rate shall be determined by using the income level determined in paragraph (d) of this section for Federal taxes and the employee's filing status. The Puerto Rico marginal tax rate for Year 1 will be used in computing the CMTR for both Year 1 and Year 2. The Puerto Rico tax tables are contained in appendix D of this part.

(B) If the applicable Puerto Rico marginal tax rate is higher than the applicable Federal marginal tax rate, then the total amount of taxes paid by the employee to both jurisdictions is equal to the employee's total income tax liability to the Commonwealth of Puerto Rico before any credit is given for taxes paid to the United States. The Federal marginal tax rate, therefore, is of no consequence and will be disregarded. In such cases, the formula in paragraph (e)(5)(iii) of this section will be used to compute the CMTR. The CMTR formula shall include only the Puerto Rico marginal tax rate, the State marginal tax rate as determined under paragraph (e)(2) of this section (when applicable), and the local marginal tax rate as determined under paragraph (e)(3) of this section. For purposes of applying the Puerto Rico CMTR formula in paragraph (e)(5)(iii) of this section, the State marginal tax rate will be applicable if both Puerto Rico and one or more of the States impose an income tax on the moving expense reimbursement, and more than one of these entities taxes the same portion of the reimbursement without allowing an adjustment or credit for income taxes paid to the other. In this situation, the S component of the CMTR formula will be the applicable State marginal tax rate as determined under paragraph (e)(2) of this section.

(C) If the applicable Puerto Rico marginal tax rate is equal to or lower than the applicable Federal marginal tax rate, then the total amount of taxes paid by the employee to both jurisdictions is equal to the employee's total Federal income tax liability. The Puerto Rico marginal tax rate, therefore, is of no consequence in such cases and will be disregarded. The CMTR will be computed using the formula in paragraphs (e)(5) (i) and (ii) of this section. This formula will include the Federal marginal tax rate as determined under paragraph (e)(1) of this section, the State marginal tax rate as determined under paragraph (e)(2) of this section (when applicable), and the local marginal tax rate as determined under paragraph (e)(3) of this section.

The State marginal tax rate will be applicable if one or more States impose tax on the moving expense reimbursement.

(ii) *The Commonwealth of the Northern Mariana Islands and the U.S. possessions.* A Federal employee who is relocated to or from a point, or between points, in the Commonwealth of the Northern Mariana Islands or the U.S. possessions (Guam, American Samoa, and the U.S. Virgin Islands) is subject to both Federal income tax and income tax assessed by the Commonwealth of the Northern Mariana Islands or the U.S. possession, as applicable. However, the income tax system and rates for the Commonwealth of the Northern Mariana Islands and for the U.S. possessions are identical to the U.S. Federal income tax system and rates. This constitutes a "mirror tax" system. A tax credit or exclusion is provided by one of the taxing jurisdictions (either the U.S., the Commonwealth of the Northern Mariana Islands, or the U.S. possession, as appropriate) to prevent double taxation. The marginal tax rate for the Commonwealth of the Northern Mariana Islands or the U.S. possession, therefore, is of no consequence since it is identical to the Federal marginal income tax rate and is completely offset by a corresponding credit or exclusion. Thus, the Commonwealth's or the possession's tax rate will not be factored into the CMTR formula. The CMTR will be computed as provided in paragraphs (e)(5) (i) and (ii) based solely on the Federal marginal tax rate; when applicable, the State(s) marginal tax rate; and the local marginal tax rate.

(5) * * *

(iii) *Calculation of CMTR's for Puerto Rico.* The following formula shall be used to calculate the CMTR for transfers to, from, or between points in Puerto Rico. (This formula is different from the formulas provided in paragraphs (e)(5) (i) and (ii) of this section since the Federal marginal tax rate is disregarded.)

CMTR Formula: X = P + S + L

Where:

X = CMTR for Year 1 and Year 2

P = Puerto Rico tax rate for Year 1

S = State tax rate for Year 1, when applicable (See § 302–11.8(e)(4)(i)(B).)

L = Local tax rate for Year 1

5. Part 302–11 is amended by adding appendix D to read as follows:

APPENDIX D TO PART 302–11—PUERTO RICO TAX TABLES FOR RIT ALLOWANCE

PUERTO RICO MARGINAL TAX RATES BY EARNED INCOME LEVEL—TAX YEAR 1987

The following table is to be used to determine the Puerto Rico marginal tax rate for computation of the RIT allowance as prescribed in § 302–11.8(e)(4)(i).

Marginal tax rate (percent)	Single filing status		Any other filing status	
	Over	But not over	Over	But not over
25.66		$25,000		
33.35				$25,000
47.03	$25,000	50,000		
50.00	50,000		$25,000	

PUERTO RICO MARGINAL TAX RATES BY EARNED INCOME LEVEL—TAX YEAR 1988

The following table is to be used to determine the Puerto Rico marginal tax rate for computation of the RIT allowance as prescribed in § 302–11.8(e)(4)(i).

Marginal tax rate (percent)	Single filing status		Any other filing status	
	Over	But not over	Over	But not over
15		$25,000		
25				$25,000
41	$25,000		$25,000	

PUERTO RICO MARGINAL TAX RATES BY EARNED INCOME LEVEL—TAX YEAR 1989

The following table is to be used to determine the Puerto Rico marginal tax rate for computation of the RIT allowance as prescribed in § 302–11.8(e)(4)(i).

Marginal tax rate (percent)	Single filing status		Any other filing status	
	Over	But not over	Over	But not over
15		$25,000		
25				$25,000
38	$25,000		$25,000	

PUERTO RICO MARGINAL TAX RATES BY EARNED INCOME LEVEL—TAX YEAR 1990

The following table is to be used to determine the Puerto Rico marginal tax rate for computation of the RIT allowance as prescribed in § 302–11.8(e)(4)(i).

Marginal tax rate (percent)	Single filing status		Any other filing status	
	Over	But not over	Over	But not over
15		$25,000		
25				$25,000
41	$25,000		$25,000	

PUERTO RICO MARGINAL TAX RATES BY EARNED INCOME LEVEL—TAX YEAR 1991

The following table is to be used to determine the Puerto Rico marginal tax rate for computation of the RIT allowance as prescribed in § 302–11.8(e)(4)(i).

Marginal tax rate (percent)	Single filing status		Any other filing status	
	Over	But not over	Over	But not over
15		$25,000		
25				$25,000
36	$25,000		$25,000	

PUERTO RICO MARGINAL TAX RATES BY EARNED INCOME LEVEL—TAX YEAR 1992

The following table is to be used to determine the Puerto Rico marginal tax rate for computation of the RIT allowance as prescribed in § 302–11.8(e)(4)(i).

Marginal tax rate (percent)	Single filing status		Any other filing status	
	Over	But not over	Over	But not over
15		$25,000		
25				$25,000
33	$25,000		$25,000	

Dated: February 11, 1993.

Dennis J. Fischer,

Acting Administrator of General Services.

[FR Doc. 93–6462 Filed 3–22–93; 8:45 am]

BILLING CODE 6820–24–F

FEDERAL COMMUNICATIONS COMMISSION

47 CFR Part 73

[MM Docket No. 91–181; RM–7696 and RM–7817]

Radio Broadcasting Services; Ashland, CA, Rolla and Monroe City, MO

AGENCY: Federal Communications Commission.

ACTION: Final rule.

SUMMARY: This document substitutes Channel 232C2 for Channel 232A at California, Missouri, and modifies the license for Station KZMO–FM to specify operation on Channel 232C2, in response to a petition filed by Town and Country Communications, Inc. See 56 FR 30525, July 3, 1991. The coordinates for Channel 232C2 at California are 38–26–00 and 92–26–00. We also substitute Channel 292A for Channel 232A at Rolla, Missouri, and modify the license for Station KQMX(FM) to specify operation on Channel 292A to accommodate the upgrade at California. The coordinates for Channel 292A at Rolla are 37–57–50 and 91–45–54. We deny the counterproposal filed by Sobocomo Radio, Inc. to substitute Channel 291C1 for Channel 291C2 at Ashland, Missouri, and substitute Channel 298A for Channel 292A at Monroe City, Missouri. With this action, this proceeding is terminated.

EFFECTIVE DATE: April 30, 1993.

FOR FURTHER INFORMATION CONTACT: Kathleen Scheuerle, Mass Media Bureau, (202) 634–6530.

SUPPLEMENTARY INFORMATION: This is a summary of the Commission's Report and Order, MM Docket No. 91–181, adopted February 25, 1993, and released March 17, 1993. The full text of this Commission decision is available for inspection and copying during normal business hours in the FCC Dockets Branch (Room 230), 1919 M Street, NW., Washington, DC. The complete text of this decision may also be purchased form the Commission's copy contractors, International Transcription Services, Inc., 2100 M Street, NW., suite 140, Washington, DC 20037, (202) 857–3800.

List of Subjects in 47 CFR Part 73

Radio broadcasting.

PART 73—[AMENDED]

1. The authority citation for part 73 continues to read as follows.

Authority: 47 U.S.C. 154, 303.

§ 73.202 [Amended]

2. Section 73.202(b), the Table of FM Allotments under Missouri, is amended by removing Channel 232A and adding Channel 232C2 at California and by removing Channel 232A and adding Channel 292A at Rolla.

Federal Communications Commission.

Michael C. Ruger,

Chief, Allocations Branch, Policy and Rules Division, Mass Media Bureau.

[FR Doc. 93–6534 Filed 3–22–93; 8:45 am]

BILLING CODE 6712–01–M

47 CFR Part 73

[MM Docket No. 92–218; RM–8053, RM–8054 and RM–8143]

Radio Broadcasting Services; Olathe, Silver Lake and Topeka, KS

AGENCY: Federal Communications Commission.

ACTION: Final rule.

SUMMARY: This document substitutes Channel 222C3 for Channel 222A at Olathe, Kansas, and modifies the construction permit for Station KCCV–FM to specify operation on Channel 222C3 in response to a petition filed by Bott Broadcasting Company. See 57 FR 46367, October 8, 1992. The coordinates for Channel 222C3 are 38–58–46 and 94–50–44. To accommodate the upgrade at Olathe, we shall substitute Channel 257A for Channel 223A at Topeka, Kansas, and modify the construction permit for Channel 223A accordingly. The coordinates for Channel 257A are 39–02–56 and 95–40–32. Margaret Escriva, the permittee for Channel 223A at Topeka, has withdrawn her proposal to upgrade to Channel 223C3 (RM–8054). In response to a counterproposal filed by New Horizons Foundation, Incorporated, we shall allot Channel 223A to Silver Lake, Kansas, as that community's first local service. The coordinates for Channel 223A at Silver Lake are 39–06–12 and 95–51–36. With this action, this proceeding is terminated.

DATES: Effective April 30, 1993. The window period for filing applications for Channel 223A at Silver Lake, Kansas, will open on May 3, 1993, and close on June 1, 1993.

FOR FURTHER INFORMATION CONTACT: Kathleen Scheuerle, Mass Media Bureau, (202) 634–6530.

SUPPLEMENTARY INFORMATION: This is a summary of the Commission's Report and Order, MM Docket No. 92–218, adopted February 19, 1993, and released March 17, 1993. The full text of this Commission decision is available for inspection and copying during normal business hours in the FCC Dockets Branch (Room 230), 1919 M Street, NW., Washington, DC. The complete text of this decision may also be purchased from the Commission's copy contractors, International Transcription Services, Inc., 2100 M Street, NW., suite 140, Washington, DC 20037, (202) 857–3800.

List of Subjects in 47 CFR Part 73

Radio broadcasting.

PART 73—[AMENDED]

1. The authority citation for part 73 continues to read as follows:

Authority: 47 U.S.C. 154, 303.

§ 73.202 [Amended]

2. Section 73.202(b), the Table of FM Allotments under Kansas, is amended by removing Channel 222A and adding Channel 222C3 at Olathe, by adding Channel 223A, Silver Lake, and by removing Channel 223A and adding Channel 257A at Topeka.

Federal Communications Commission.

Michael C. Ruger,

Chief, Allocations Branch, Policy and Rules Division, Mass Media Bureau.

[FR Doc. 93–6535 Filed 3–22–93; 8:45 am]

BILLING CODE 6712–01–M

---

47 CFR Part 73

[MM Docket No. 91–362; RM–7873]

Radio Broadcasting Services; Jourdanton, TX

AGENCY: Federal Communications Commission.

ACTION: Final rule.

SUMMARY: The Commission, at the request of Seventh Day Christian Group, allots Channel 239A to Jourdanton, Texas. See 57 FR 00867, January 9, 1992. Channel 239A can be allotted to Jourdanton in compliance with the Commission's minimum distance separation requirements without the imposition of a site restriction. The coordinates for Channel 239A are 28–54–48 and 98–32–36. Mexican concurrence has been obtained for the allotment of Channel 239A at Jourdanton, Texas. With this action, this proceeding is terminated.

DATES: Effective April 30, 1993. The window period for filing applications will open on May 3, 1993, and close on June 1, 1993.

FOR FURTHER INFORMATION CONTACT: Pamela Blumenthal, Mass Media Bureau, (202) 634–6530.

SUPPLEMENTARY INFORMATION: This is a synopsis of the Commission's Report and Order, MM Docket No. 91–362, adopted February 23, 1993, and released March 17, 1993. The full text of this Commission decision is available for inspection and copying during normal business hours in the FCC Dockets Branch (Room 230), 1919 M Street, NW., Washington, DC. The complete text of this decision may also be purchased from the Commission's copy contractor, ITS, Inc., (202) 857–3800, 2100 M Street, NW., suite 140, Washington, DC 20037.

List of Subjects in 47 CFR Part 73

Radio broadcasting.

PART 73—[AMENDED]

1. The authority citation for part 73 continues to read as follows:

Authority: 47 U.S.C. 154, 303.

§ 73.202 [Amended]

2. Section 73.202(b), the Table of FM Allotments under Texas, is amended by adding Jourdanton, Channel 239A.

Federal Communications Commission.

Michael C. Ruger,

Chief, Allocations Branch, Policy and Rules Division, Mass Media Bureau.

[FR Doc. 93–6537 Filed 3–22–93; 8:45 am]

BILLING CODE 6712–01–M

---

47 CFR Part 73

[MM Docket No. 92–241; RM–8084]

Radio Broadcasting Services; Camas, WA and Seaside, OR

AGENCY: Federal Communications Commission.

ACTION: Final rule.

SUMMARY: The Commission, at the request of Pacific Northwest Broadcasting Corporation, substitutes Channel 234C2 for Channel 234C3 at Camas, Washington, and modifies Station KMUZ–FM's construction permit accordingly. See 57 FR 49160, October 30, 1992. To accommodate the upgrade, we also substitute Channel 251A for Channel 234A at Seaside, Oregon, and modify Station KQEM (FM)'s construction permit accordingly. Channel 234C2 can be allotted to Camas, Washington, in compliance with the Commission's minimum distance separation requirements at petitioner's specified site with a site restriction of 28.7 kilometers (17.8 miles) east. The coordinates for Channel 234C2 at Camas are North Latitude 45–32–20 and West Longitude 122–02–24. *See* Supplementary Information, *infra*.

EFFECTIVE DATE: April 30, 1993.

FOR FURTHER INFORMATION CONTACT: Sharon P. McDonald, Mass Media Bureau, (202) 634–6530.

SUPPLEMENTARY INFORMATION: This is a synopsis of the Commission's Report and Order, MM Docket No. 92–241, adopted February 18, 1993, and released March 17, 1993. The full text of this Commission decision is available for inspection and copying during normal business hours in the FCC Dockets Branch (Room 230), 1919 M Street, NW., Washington, DC. The complete text of this decision may also be purchased from the Commission's copy contractors, International Transcription Service, Inc. (202) 857–3800, 2100 M Street, NW., suite 140, Washington, DC 20037.

Additionally, Channel 251A can be allotted to Seaside, Oregon, with a site restriction of 10.1 kilometers (6.3 miles) south. The coordinates for Channel 251A at Seaside are North Latitude 45–54–35 and West Longitude 123–56–07. Since Camas, Washington, and Seaside, Oregon, are located within 320 kilometers (200 miles) of the U.S.-Canadian border, concurrence by the Canadian government has been obtained. With this action, this proceeding is terminated.

List of Subjects in 47 CFR Part 73

Radio broadcasting.

PART 73—[AMENDED]

1. The authority citation for part 73 continues to read as follows:

Authority: 47 U.S.C. 154, 303.

§ 73.202 [Amended]

2. Section 73.202(b), the Table of FM Allotments under Washington, is amended by removing Channel 234C3 and adding Channel 234C2 at Camas.

3. Section 73.202(b), the Table of FM Allotments under Oregon, is amended by removing Channel 234A and adding Channel 251A at Seaside.

Federal Communications Commission.

Michael C. Ruger,

Chief, Allocations Branch, Policy and Rules Division, Mass Media Bureau.

[FR Doc. 93–6536 Filed 3–22–93; 8:45 am]

BILLING CODE 6712–01–M

Proposed Rules

Federal Register
Vol. 58, No. 54
Tuesday, March 23, 1993

This section of the FEDERAL REGISTER contains notices to the public of the proposed issuance of rules and regulations. The purpose of these notices is to give interested persons an opportunity to participate in the rule making prior to the adoption of the final rules.

DEPARTMENT OF ENERGY

10 CFR Part 810

Assistance to Foreign Atomic Energy Activities; Correction

AGENCY: Office of Arms Control and Nonproliferation, Department of Energy.

ACTION: Correction to proposed rulemaking.

SUMMARY: This document contains corrections to proposed amendments to the Department of Energy's (DOE) regulations 10 CFR part 810 which were published Thursday, March 11, 1993 (58 FR 13427). The regulations related to assistance to foreign atomic energy activities.

FOR FURTHER INFORMATION CONTACT: Mr. Zander Hollander, Export Control Specialist, Export Control Operations Division, Office of Export Control and International Safeguards, AN-30, U.S. Department of Energy. Telephone (202) 586-2125.

SUPPLEMENTARY INFORMATION:

Need for Correction

As published, the proposed rulemaking erroneously lists two countries on the list of countries in the amended § 810.8. The two countries, Estonia and Latvia, actually should have been deleted from the list.

Correction of Publication

Accordingly, the publication on March 11, 1993, of the proposed amendments, which were the subject of FR Doc. 93-5488, is corrected as follows:

On Page 13429, third column, § 810.8(a) would be correctly revised to read as follows:

§ 810.8 Activities requiring specific authorization.

* * * * *

(a) Engaging directly or indirectly in the production of special nuclear material in any of the countries listed below:

Afghanistan
Albania
Algeria
Andorra
Angola
Argentina
Armenia
Azerbaijan
Bahrain
Belarus
Brazil
Burma (Myanmar)
Cambodia
Chile
China, People's Republic of
Comoros
Cuba
Djibouti
Georgia
Guyana
India
Iran
Iraq
Israel
Kazakhstan
Korea, People's Democratic Republic of
Kuwait
Kyrgyzstan
Laos
Libya
Mauritania
Moldova
Monaco
Mongolian People's Democratic Republic
Mozambique
Niger
Oman
Pakistan
Oatar
Russia
Saudi Arabia
South Africa
Syria
Tajikistan
Turkmenistan
Ukraine
United Arab Emirates
Uzbekistan
Vanuatu
Vietnam
Zambia
Zimbabwe

Countries may be removed from or added to this list by amendments published in the **Federal Register**.

* * * * *

Victor E. Alessi,

Director, Office of Arms Control and Nonproliferation, Office of the Secretary.

[FR Doc. 93-6615 Filed 3-22-93; 8:45 am]

BILLING CODE 6450-01-M

DEPARTMENT OF TRANSPORTATION

Federal Aviation Administration

14 CFR Part 39

[Docket No. 93-NM-06-AD]

Airworthiness Directives; Aerospatiale Model ATR72-100 and -200 Series Airplanes

AGENCY: Federal Aviation Administration, DOT.

ACTION: Notice of proposed rulemaking (NPRM).

SUMMARY: This document proposes the adoption of a new airworthiness directive (AD) that is applicable to certain Aerospatiale Model ATR72-100 and -200 series airplanes. This proposal would require an initial inspection of a floor beam and pressure plate to detect cracks; and repetitive inspections or modification or repair of the floor beam area, as necessary. This proposal would also require eventual repair or modification of the floor beam area; when accomplished, this repair or modification would terminate the need for the proposed repetitive inspections. This proposal is prompted by in-service and full-scale test reports of cracks in a floor beam and pressure plate. The actions specified by the proposed AD are intended to prevent loss of structural strength of a floor beam and pressure plate, or loss of cabin pressurization.

DATES: Comments must be received by May 17, 1993.

ADDRESSES: Submit comments in triplicate to the Federal Aviation Administration (FAA), Transport Airplane Directorate, ANM-103, Attention: Rules Docket No. 93-NM-06-AD, 1601 Lind Avenue, SW., Renton, Washington 98055-4056. Comments may be inspected at this location between 9 a.m. and 3 p.m., Monday through Friday, except Federal holidays.

The service information referenced in the proposed rule may be obtained from Aerospatiale, 316 Route de Bayonne, 31060 Toulouse, Cedex 03, France. This information may be examined at the FAA, Transport Airplane Directorate, 1601 Lind Avenue, SW., Renton, Washington.

FOR FURTHER INFORMATION CONTACT: Gary Lium, Aerospace Engineer, Standardization Branch, ANM-113,

FAA, Transport Airplane Directorate, 1601 Lind Avenue, SW., Renton, Washington 98055–4056; telephone (206) 227–1112; fax (206) 227–1320.

SUPPLEMENTARY INFORMATION:

Comments Invited

Interested persons are invited to participate in the making of the proposed rule by submitting such written data, views, or arguments as they may desire. Communications shall identify the Rules Docket number and be submitted in triplicate to the address specified above. All communications received on or before the closing date for comments, specified above, will be considered before taking action on the proposed rule. The proposals contained in this notice may be changed in light of the comments received.

Comments are specifically invited on the overall regulatory, economic, environmental, and energy aspects of the proposed rule. All comments submitted will be available, both before and after the closing date for comments, in the Rules Docket for examination by interested persons. A report summarizing each FAA-public contact concerned with the substance of this proposal will be filed in the Rules Docket.

Commenters wishing the FAA to acknowledge receipt of their comments submitted in response to this notice must submit a self-addressed, stamped postcard on which the following statement is made: "Comments to Docket Number 93–NM–06–AD." The postcard will be date stamped and returned to the commenter.

Availability of NPRMs

Any person may obtain a copy of this NPRM by submitting a request to the FAA, Transport Airplane Directorate, ANM–103, Attention: Rules Docket No. 93–NM–06–AD, 1601 Lind Avenue, SW., Renton, Washington 98055–4056.

Discussion

The Direction Générale de l'Aviation Civile (DGAC), which is the airworthiness authority for France, recently notified the FAA that an unsafe condition may exist on certain Aerospatiale Model ATR72–100 and –200 series airplanes. The DGAC advises that cracks have been discovered in the floor beam and pressure plate at frame 26 on seven in-service airplanes, as well as during full-scale fatigue testing. The origin of this problem has been traced to an alignment problem in the floor beam area that occurred during production. This condition, if not corrected, could result in loss of structural strength of the floor beam and pressure plate, or loss of cabin pressurization.

Aerospatiale has issued Service Bulletin ATR72–53–1026, Revision 1, dated January 22, 1993, that describes procedures for repetitive detailed visual inspections to detect cracks in the floor beam in the buttock line 0 area and repetitive high frequency eddy current inspections (HFEC) of the pressure plate forward and aft of the floor beam at frame 26 of the fuselage at buttock line 0.

Aerospatiale has also issued Service Bulletin ATR72–53–1027, dated December 18, 1992, that describes procedures for accomplishment of Modification 3616, which entails reinforcement of the floor beam at frame 26 of the fuselage at buttock line 0.

Aerospatiale has also issued Service Bulletin ATR72–53–1028, dated January 18, 1993, that describes procedures for installation of a doubler at frame 26 of the fuselage at buttock line 0.

The DGAC classified these service bulletins as mandatory and issued French Airworthiness Directives 92–272–017(B), dated December 23, 1992, and 92–272–017(B)R1, dated February 3, 1993, in order to assure the continued airworthiness of these airplanes in France.

This airplane model is manufactured in France and is type certificated for operation in the United States under the provisions of section 21.29 of the Federal Aviation Regulations and the applicable bilateral airworthiness agreement. Pursuant to this bilateral airworthiness agreement, the DGAC has kept the FAA informed of the situation described above. The FAA has examined the findings of the DGAC, reviewed all available information, and determined that AD action is necessary for products of this type design that are certificated for operation in the United States.

Since an unsafe condition has been identified that is likely to exist or develop on other airplanes of the same type design registered in the United States, the proposed AD would require an initial inspection of a floor beam and pressure plate to detect cracks; and repetitive inspections or modification or repair of the floor beam area, as necessary. This proposal would also require eventual repair or modification of the floor beam area; when accomplished, this repair or modification would terminate the need for the proposed inspections. (If any crack is present, the repair would be required to be performed. If no crack is present, Modification 3616 would be required to be installed.) The actions would be required to be accomplished in accordance with the service bulletins described previously.

The applicability of the proposed AD excludes those airplanes on which Modification 3616 or 3584 has been accomplished. Airplanes so modified are not subject to the unsafe condition addressed by this proposed AD.

The FAA has determined that the circumstances related to the cracking problem addressed by this AD action are such that continued operation of Model ATR72–100 and –200 series airplanes may be permitted when cracks of certain limited lengths are present in either the floor beam or the pressure plate at frame 26 of the fuselage at buttock line 0. In many areas of the airplane, fatigue cracks may exist or develop simultaneously at multiple sites. When multiple site damage is involved, historical in-service experience demonstrates that undetected damage, in conjunction with known damage, may weaken the structure beyond acceptable limits. In such cases, the FAA will not usually permit continued flight with known cracks. For the purposes of this proposed AD, however, investigations by both the manufacturer and the DGAC have shown that damage is due to an alignment problem occurring during production, and is not subject to multiple site damage. Further, the manufacturer has shown that the structure will continue to carry ultimate loads with cracks longer than those identified in this proposed AD. The FAA has reviewed the crack growth data and has determined that the specified proposed inspection intervals are appropriate to ensure the continued operational safety of these airplanes. Finally, the inspections required by this AD are not considered tedious and involve only one localized site; therefore, there is a high probability that any crack would be easily detected. For all of these reasons, the FAA has determined that the progressive inspection and repair schedule, as proposed in this AD, is appropriate.

The FAA estimates that 11 airplanes of U.S. registry would be affected by this proposed AD, that it would take approximately 4 work hours per airplane to accomplish the inspections, and that the average labor rate is $55 per work hour. Based on these figures, the total cost impact of the proposed AD on U.S. operators is estimated to be $2,420, or $220 per airplane.

The FAA has been advised that 9 U.S.-registered airplanes have been modified previously in accordance with the proposed requirements of this AD. Therefore, the future economic cost impact of this proposed rule on U.S. operators is now only $440.

The regulations proposed herein would not have substantial direct effects on the States, on the relationship between the national government and the States, or on the distribution of power and responsibilities among the various levels of government. Therefore, in accordance with Executive Order 12612, it is determined that this proposal would not have sufficient federalism implications to warrant the preparation of a Federalism Assessment.

For the reasons discussed above, I certify that this proposed regulation (1) is not a "major rule" under Executive Order 12291; (2) is not a "significant rule" under the DOT Regulatory Policies and Procedures (44 FR 11034, February 26, 1979); and (3) if promulgated, will not have a significant economic impact, positive or negative, on a substantial number of small entities under the criteria of the Regulatory Flexibility Act. A copy of the draft regulatory evaluation prepared for this action is contained in the Rules Docket. A copy of it may be obtained by contacting the Rules Docket at the location provided under the caption "**ADDRESSES.**"

List of Subjects in 14 CFR Part 39

Air transportation, Aircraft, Aviation safety, Safety.

The Proposed Amendment

Accordingly, pursuant to the authority delegated to me by the Administrator, the Federal Aviation Administration proposes to amend 14 CFR part 39 of the Federal Aviation Regulations as follows:

PART 39—AIRWORTHINESS DIRECTIVES

1. The authority citation for part 39 continues to read as follows:

Authority: 49 U.S.C. App. 1354(a), 1421 and 1423; 49 U.S.C. 106(g); and 14 CFR 11.89.

§ 39.13 [Amended]

2. Section 39.13 is amended by adding the following new airworthiness directive:

Aerospatiale: Docket 93–NM–06–AD.

Applicability: Model ATR72–100 and –200 series airplanes; on which either Modification 3616, as described in Aerospatiale Service Bulletin ATR72–53–1027, dated December 18, 1992, or Modification 3584 have not been accomplished; certificated in any category.

Compliance: Required as indicated, unless accomplished previously.

To prevent loss of structural strength of the floor beam and pressure plate, or loss of cabin pressurization, accomplish the following:

(a) Prior to the accumulation of 1,000 total flight cycles, or within the next 30 days after the effective date of this AD, whichever occurs later, perform a detailed visual inspection to detect cracks of the floor beam at frame 26 of the fuselage in the buttock line 0 area, in accordance with Aerospatiale Service Bulletin ATR72–53–1026, Revision 1, dated January 22, 1993.

(1) If no crack is found, accomplish either paragraph (a)(1)(i) or (a)(1)(ii) of this AD:

(i) Thereafter, at intervals not to exceed 1,000 flight cycles, repeat the detailed visual inspection.

(ii) Within the next 1,000 flight cycles, install Modification 3616 in accordance with Aerospatiale Service Bulletin ATR72–53–1027, dated December 18, 1992. No further action is required by this AD.

(2) If a single crack is found that is less than 65 millimeters (mm) in length, accomplish either paragraph (a)(2)(i) or (a)(2)(ii) of this AD.

(i) Thereafter, at intervals not to exceed 750 flight cycles, repeat the detailed visual inspection.

(ii) Within the next 750 flight cycles after crack discovery, repair the crack in accordance with Aerospatiale Service Bulletin ATR72–53–1028, dated January 18, 1993. No further action is required by this AD.

(3) If a single crack is found that is equal to or greater than 65 mm but less than 80 mm in length: Within the next 250 flight cycles after crack discovery, repair the crack in accordance with Aerospatiale Service Bulletin ATR72–53–1028, dated January 18, 1993. No further action is required by this AD.

(4) If a single crack is found that is equal to or greater than 80 mm in length: Prior to further flight, repair the crack in accordance with Aerospatiale Service Bulletin ATR72–53–1028, dated January 18, 1993. No further action is required by this AD.

(5) If two or more cracks are found: Prior to further flight, repair the cracks in accordance with Aerospatiale Service Bulletin ATR72–53–1028, dated January 18, 1993. No further action is required by this AD.

(b) Prior to the accumulation of 1,000 total flight cycles, or within the next 30 days after the effective date of this AD, whichever occurs later, perform a high frequency eddy current (HFEC) inspection of the pressure plate forward and aft of the floor beam at frame 26 of the fuselage at buttock line 0, in accordance with Aerospatiale Service Bulletin ATR72–53–1026, Revision 1, dated January 22, 1993.

(1) If no crack is found, accomplish either paragraph (b)(1)(i) or (b)(1)(ii) of this AD:

(i) Thereafter, at intervals not to exceed 1,000 flight cycles, repeat the HFEC inspection.

(ii) Within the next 1,000 flight cycles, install Modification 3616 in accordance with Aerospatiale Service Bulletin ATR72–53–1027, dated December 18, 1992. No further action is required by this AD.

(2) If a single crack is found that is less than 65 millimeters (mm) in length, accomplish either paragraph (b)(2)(i) or (b)(2)(ii) of this AD:

(i) Thereafter, at intervals not to exceed 500 flight cycles, repeat the HFEC inspection.

(ii) Within the next 500 flight cycles after crack discovery, repair the crack in accordance with Aerospatiale Service Bulletin ATR72–53–1028, dated January 18, 1993. No further action is required by this AD.

(3) If a single crack is found that is equal to or greater than 65 mm but less than 80 mm in length: Within the next 250 flight cycles after crack discovery, repair the crack in accordance with Aerospatiale Service Bulletin ATR72–53–1028, dated January 18, 1993. No further action is required by this AD.

(4) If a single crack is found that is equal to or greater than 80 mm in length: Prior to further flight, repair the crack in accordance with Aerospatiale Service Bulletin ATR72–53–1028, dated January 18, 1993. No further action is required by this AD.

(5) If two or more cracks are found: Prior to further flight, repair the cracks in accordance with Aerospatiale Service Bulletin ATR72–53–1028, dated January 18, 1993. No further action is required by this AD.

(c) Within 6 months after the effective date of this AD, if no crack is present, install Modification 3616 in accordance with Aerospatiale Service Bulletin ATR72–53–1027, dated December 18, 1992; or, if any crack is present, repair in accordance with Aerospatiale Service Bulletin ATR72–53–1028, dated January 18, 1993.

(d) Installation of Modification 3616 in accordance with Aerospatiale Service Bulletin ATR72–53–1027, dated December 18, 1992; or repair in accordance with Aerospatiale Service Bulletin ATR72–53–1028, dated January 18, 1993; constitutes terminating action for the repetitive detailed visual inspections of the floor beam and repetitive HFEC inspections of the pressure plate required by this AD.

(e) An alternative method of compliance or adjustment of the compliance time that provides an acceptable level of safety may be used if approved by the Manager, Standardization Branch, ANM–113, FAA, Transport Airplane Directorate. Operators shall submit their requests through an appropriate FAA Principal Maintenance Inspector, who may add comments and then send it to the Manager, Standardization Branch, ANM–113.

Note: Information concerning the existence of approved alternative methods of compliance with this AD, if any, may be obtained from the Standardization Branch, ANM–113.

(f) Special flight permits may be issued in accordance with FAR 21.197 and 21.199 to operate the airplane to a location where the requirements of this AD can be accomplished.

Issued in Renton, Washington, on March 17, 1993.

Darrell M. Pederson,

Acting Manager, Transport Airplane Directorate, Aircraft Certification Service.

[FR Doc. 93–6567 Filed 3–22–93; 8:45 am]

BILLING CODE 4910–13–M

14 CFR Part 39

[Docket No. 92-ASW-49]

Airworthiness Directives; Bell Helicopter Textron, Inc., Model 204B, 205A, 205A-1, 205B, 212, and 412 Helicopters

AGENCY: Federal Aviation Administration, DOT.

ACTION: Notice of proposed rulemaking (NPRM).

SUMMARY: This document proposes the supersedure of an existing airworthiness directive (AD), applicable to Bell Helicopter Textron, Inc. (BHTI) Model 205B, 212, and 412 helicopters, that currently requires a repetitive magnetic particle inspection of the main transmission lower planetary spider. This action would require the repetitive magnetic particle inspection of the main transmission lower planetary spider to additionally apply to the BHTI Model 204B, 205A, and 205A-1 helicopters. This proposal is prompted by the need to apply the magnetic particle inspections to additional BHTI model helicopters as well as more clearly state the applicable compliance times for these inspections. The actions specified by the proposed AD are intended to prevent a fatigue failure of the main transmission lower planetary spider, which could result in failure of the main transmission and subsequent loss of control of the helicopter.

DATES: Comments must be received by May 24, 1993.

ADDRESSES: Submit comments in triplicate to the Federal Aviation Administration (FAA), Office of the Assistant Chief Counsel, Attention: Rules Docket No. 92-ASW-49, 4400 Blue Mound Road, Fort Worth, Texas 76106. Comments may be inspected at this location between 9 a.m. and 3 p.m., Monday through Friday, except Federal holidays.

The service information referenced in the proposed rule may be obtained from Bell Helicopter Textron, Inc. (BHTI), P.O. Box 482, Fort Worth, Texas 76101. This information may be examined at the FAA, Office of the Assistant Chief Counsel, Rules Docket, 4400 Blue Mound Road, Bldg. 3B, room 158, Fort Worth, Texas.

FOR FURTHER INFORMATION CONTACT: Mr. Scott Horn, Aerospace Engineer, Aircraft Certification Office, FAA, Rotorcraft Directorate, 4400 Blue Mound Road, Fort Worth, Texas 76106, telephone (817) 624-5177, fax (817) 740-3394.

SUPPLEMENTARY INFORMATION:

Comments Invited

Interested persons are invited to participate in the making of the proposed rule by submitting such written data, views, or arguments as they may desire. Communications should identify the Rules Docket number and be submitted in triplicate to the address specified above. All communications received on or before the closing date for comments, specified above, will be considered before taking action on the proposed rule. The proposals contained in this notice may be changed in light of the comments received.

Comments are specifically invited on the overall regulatory, economic, environmental, and energy aspects of the proposed rule. All comments submitted will be available, both before and after the closing date for comments, in the Rules Docket for examination by interested persons. A report summarizing each FAA-public contact concerned with the substance of this proposal will be filed in the Rules Docket.

Commenters wishing the FAA to acknowledge receipt of their comments submitted in response to this notice must submit a self-addressed, stamped postcard on which the following statement is made: "Comments to Docket Number 92-ASW-49." The postcard will be date stamped and returned to the commenter.

Availability of NPRMs

Any person may obtain a copy of this NPRM by submitting a request to the FAA, Office of the Assistant Chief Counsel, Attention: Rules Docket No. 92-ASW-49, 4400 Blue Mound Road, Fort Worth, Texas 76106.

Discussion

On April 28, 1992, the FAA issued AD 92-11-07, Amendment 39-8257 (57 FR 30392, July 9, 1992), to require a repetitive magnetic particle inspection of the main transmission lower planetary spider (spider) in the BHTI Model 205B, 212 and 412 helicopters. That action was prompted by the results of a crack growth analysis conducted by the manufacturer on a planetary spider that had recently cracked in service and two additional fatigue tests conducted on spiders. These test data and analyses show that, over time and under normal operating conditions, a crack can appear in the spider and spread to a critical length causing it to fail. The requirements of that AD are intended to prevent failure of the spider that could result in failure of the main transmission and subsequent loss of control of the helicopter.

Since the issuance of that AD, the FAA has determined that three additional BHTI Models, 204B, 205A, and 205A-1 are equipped with the same spider and operate in comparable environments and should be subjected to the same inspections. Additionally, there have been questions raised about the required compliance times stated in AD 92-11-07. Paragraph (a) of that AD requires the magnetic particle inspection within the next 600 hours time in service after the effective date of the AD, or prior to the accumulation of 3,100 hours time in service from the last magnetic particle inspection. Paragraph (b) requires the inspection be conducted at intervals not to exceed 3,100 hours time in service from the last inspection. This proposal would require the inspection within the next 600 hours time in service after the effective date of the AD, unless an inspection has already been accomplished within the last 2,500 hours time in service, and thereafter at intervals not to exceed 3,100 hours time in service from the last inspection.

Since an unsafe condition has been identified that is likely to exist or develop on other products of this same type design, the proposed AD would supersede AD 92-11-07 to require the magnetic particle inspection on three additional BHTI model helicopters and to clarify the compliance times. This proposal would apply to BHTI Model 204B, 205A, 205A-1, 205B, 212, and 412 helicopters and would require, within 600 hours time in service after the effective date of the AD, unless previously accomplished within the last 2,500 hours time in service, a magnetic particle inspection of the spider in accordance with the applicable maintenance, repair, and overhaul manuals. Repetitive inspections would be required at intervals not to exceed 3,100 hours time in service.

The FAA estimates that 1,207 helicopters of U.S. registry would be affected by this proposed AD, that it would take approximately 6 work hours per helicopter if accomplished during overhaul, or 32 workhours per helicopter if not accomplished during overhaul, to accomplish the proposed actions, and that the average labor rate is $55 per work hour. It is estimated that one-half of the affected helicopter fleet may be effected each year by the requirements of this AD. Based on these figures, the total cost impact of the proposed AD on U.S. operators is estimated to range from $199,155 to $1,062,160.

The regulations proposed herein would not have substantial direct effects on the States, on the relationship between the national government and the States, or on the distribution of power and responsibilities among the various levels of government. Therefore, in accordance with Executive Order 12612, it is determined that this proposal would not have sufficient federalism implications to warrant the preparation of a Federalism Assessment.

For the reasons discussed above, I certify that this proposed regulation (1) is not a "major rule" under Executive Order 12291; (2) is not a "significant rule" under the DOT Regulatory Policies and Procedures (44 FR 11034, February 26, 1979); and (3) if promulgated, will not have a significant economic impact, positive or negative, on a substantial number of small entities under the criteria of the Regulatory Flexibility Act. A copy of the draft regulatory evaluation prepared for this action is contained in the Rules Docket. A copy of it may be obtained by contacting the Rules Docket at the location provided under the caption "ADDRESSES."

List of Subjects in 14 CFR Part 39

Air transportation, Aircraft, Aviation safety, Safety.

The Proposed Amendment

Accordingly, pursuant to the authority delegated to me by the Administrator, the Federal Aviation Administration proposes to amend 14 CFR part 39 of the Federal Aviation Regulations as follows:

PART 39—AIRWORTHINESS DIRECTIVES

1. The authority citation for part 39 continues to read as follows:

Authority: 49 U.S.C. App. 1354(a), 1421 and 1423; 49 U.S.C. 106(g); and 14 CFR 11.89.

§ 39.13 [Amended]

2. Section 39.13 is amended by removing amendment 39–8257 (57 FR 30392, July 9, 1992), and by adding a new airworthiness directive (AD), to read as follows:

Bell Helicopter Textron, Inc. (BHTI): Docket No. 92–ASW–49. Supersedes AD 92–11–07, Amendment 39–8257, Docket No. 91–ASW–17.

Applicability: BHTI Model 204B, 205A, 205A–1, 205B, 212, and 412 helicopters, certificated in any category, with main rotor transmission lower planetary spider, part number (P/N) 204–040–785–003, installed.

Compliance: Required as indicated, unless accomplished previously.

To prevent possible fatigue failure of the main transmission lower planetary spider, P/N 204–040–785–003, which could result in failure of the main transmission and subsequent loss of control of the helicopter, accomplish the following:

(a) Within the next 600 hours time in service after the effective date of this AD, unless previously accomplished within the last 2,500 hours time in service, and thereafter at intervals not to exceed 3,100 hours time in service from the last inspection, remove the lower planetary spider and perform a magnetic particle inspection for cracks in accordance with the pertinent BHTI maintenance, repair, and overhaul manuals.

(b) Remove spiders with cracks and replace with an airworthy part prior to further flight.

(c) An alternative method of compliance or adjustment of the compliance time, which provides an acceptable level of safety, may be used when approved by the Manager, Rotorcraft Certification Office, FAA, Rotorcraft Directorate, 4400 Blue Mound Road, Fort Worth, Texas 76106. Operators shall submit their requests through an FAA Principal Maintenance Inspector, who may concur or comment and then send it to the Manager, Rotorcraft Certification Office.

Note: Information concerning the existence of approved alternative methods of compliance with this AD, if any, may be obtained from the Manager, Rotorcraft Certification Office.

(d) Special flight permits may be issued in accordance with FAR 21.197 and 21.199 to operate the helicopter to a location where the requirements of this AD can be accomplished.

Issued in Fort Worth, Texas, on March 10, 1993.

Henry A. Armstrong,

Acting Manager, Rotorcraft Directorate, Aircraft Certification Service.

[FR Doc. 93–6610 Filed 3–22–93; 8:45 am]

BILLING CODE 4910–13–P

---

14 CFR Part 39

[Docket No. 92–ASW–33]

Airworthiness Directives; McDonnell Douglas Helicopter Company and Hughes Helicopters, Inc. Model 369 Series Helicopters

AGENCY: Federal Aviation Administration, DOT.

ACTION: Notice of proposed rulemaking (NPRM).

SUMMARY: This document proposes the adoption of a new airworthiness directive (AD) that is applicable to McDonnell Douglas Helicopter Company (MDHC) and Hughes Helicopters, Inc. Model 369 series helicopters. This proposal would require initial and repetitive inspections of the fuel vent line emergency shutoff valve assembly and replacement of that assembly upon either discovering a closed or otherwise obstructed vent tube, or upon the rotorcraft attaining 3,000 hours time in service. This proposal is prompted by several reports of erroneously high fuel quantity indications and that condition led to inflight engine fuel exhaustion. The actions specified by the proposed AD are intended to prevent erroneous inflight fuel quantity indications that could lead to engine fuel exhaustion and a subsequent power-off landing.

DATES: Comments must be received by May 7, 1993.

ADDRESSES: Submit comments in triplicate to the Federal Aviation Administration (FAA), Office of the Assistant Chief Counsel, Attention: Rules Docket No. 92–ASW–33, 4400 Blue Mound Road, Fort Worth, Texas 76106. Comments may be inspected at this location between 9 a.m. and 3 p.m., Monday through Friday, except Federal holidays.

The service information referenced in the proposed rule may be obtained from McDonnell Douglas Helicopter Company, 5000 East McDowell Road, Mesa, Arizona 85205–9797, Attention: Field Service Department. This information may be examined at the FAA, Office of the Assistant Chief Counsel, 4400 Blue Mound Rd., Bldg. 3B, room 158, Fort Worth, Texas.

FOR FURTHER INFORMATION CONTACT: Bruce Conze, Aerospace Engineer, Propulsion Branch, Los Angeles Aircraft Certification Office, ANM–143L, FAA, Northwest Mountain Region, 3229 E. Spring Street, Long Beach, California, 90806–2425, telephone (310) 988–5261, FAX (310) 988–5210.

SUPPLEMENTARY INFORMATION:

Comments Invited

Interested persons are invited to participate in the making of the proposed rule by submitting such written data, views, or arguments as they may desire. Communications should identify the Rules Docket number and be submitted in triplicate to the address specified above. All communications received on or before the closing date for comments, specified above, will be considered before taking action on the proposed rule. The proposals contained in this notice may be changed in light of the comments received.

Comments are specifically invited on the overall regulatory, economic, environmental, and energy aspects of the proposed rule. All comments submitted will be available, both before and after the closing date for comments, in the Rules Docket for examination by interested persons. A report summarizing each FAA-public contact

concerned with the substance of this proposal will be filed in the Rules Docket.

Commenters wishing the FAA to acknowledge receipt of their comments submitted in response to this notice must submit a self-addressed, stamped postcard on which the following statement is made: "Comments to Docket Number 92-ASW-33." The postcard will be date stamped and returned to the commenter.

Availability of NPRM

Any person may obtain a copy of this NPRM by submitting a request to the FAA, Office of the Assistant Chief Counsel, Attention: Rules Docket No. 92-ASW-33, 4400 Blue Mound Road, Fort Worth, Texas 76106.

Discussion: Several incidences of engine flameout, involving these Model 369 series helicopters have been reported. These flameouts have been attributed to fuel exhaustion. These events reportedly occurred even though the fuel quantity gage indicated that there was fuel remaining in the tank. Further investigation of these incidents revealed that the lead weight on the fuel vent line emergency shutoff valve assembly (valve assembly), part number (P/N) 369H8108, -501, or -503, had eroded and loosened from its support shaft. This allowed the weight to slide down the shaft and block the vent line, thereby closing the valve. These investigations revealed that as fuel is used, a vacuum develops in the fuel tank bladder causing it to collapse and contact the fuel quantity sensor. This contact prevents the fuel quantity sensor from moving as fuel is used, and causes an erroneous indication on the pilot's fuel quantity gage. This condition, if not corrected, could result in fuel exhaustion, and a subsequent power-off landing.

The FAA has reviewed and approved MDHC Service Information Notice HN-234/DN-181/EN-73/FN-60, dated January 17, 1992, that describes the procedures for inspection of the fuel vent line system and replacement, if necessary, of defective valve assemblies. These inspection procedures are included in the proposed AD. The proposed AD would require the installation of improved valve assemblies on helicopters before reaching 3,000 hours' time in service, or as otherwise specified.

Since an unsafe condition has been identified that is likely to exist or develop on other products of this same type design, the proposed AD would require inspection of the valve assembly, replacement of defective valve assemblies, and eventual replacement of all original valve assemblies with an improved valve assembly.

The FAA estimates that 2,800 helicopters of U.S. registry would be affected by this proposed AD, that it would take approximately 8 work hours per helicopter to accomplish the proposed actions, and that the average labor rate is $55 per work hour. Required parts would cost approximately $2,320 per helicopter. Based on these figures, the total cost impact of the proposed AD on U.S. operators is estimated to be $7,728,000.

The regulations proposed herein would not have substantial direct effects on the States, on the relationship between the national government and the States, or on the distribution of power and responsibilities among the various levels of government. Therefore, in accordance with Executive Order 12612, it is determined that this proposal would not have sufficient federalism implications to warrant the preparation of a Federalism Assessment.

For the reasons discussed above, I certify that this proposed regulation (1) is not a "major rule" under Executive Order 12291; (2) is not a "significant rule" under the DOT Regulatory Policies and Procedures (44 FR 11034, February 26, 1979); and (3) if promulgated, will not have a significant economic impact, positive or negative, on a substantial number of small entities under the criteria of the Regulatory Flexibility Act. A copy of the draft regulatory evaluation prepared for this action is contained in the Rules Docket. A copy of it may be obtained by contacting the Rules Docket at the location provided under the caption **ADDRESSES**.

List of Subjects in 14 CFR Part 39

Air transportation, Aircraft, Aviation safety, Safety.

The Proposed Amendment

Accordingly, pursuant to the authority delegated to me by the Administrator, the Federal Aviation Administration proposes to amend 14 CFR part 39 of the Federal Aviation Regulations as follows:

PART 39—AIRWORTHINESS DIRECTIVES

1. The authority citation for part 39 continues to read as follows:

Authority: 49 U.S.C. App. 1354(a), 1421 and 1423; 49 U.S.C. 106(g); and 14 CFR 11.89.

§ 39.13 [Amended]

2. Section 39.13 is amended by adding the following new airworthiness directive:

McDonnell Douglas Helicopter Company and Hughes Helicopters, Inc.: Docket No. 92-ASW-33.

Applicability: MDHC and Hughes Model 369H, 369D, 369E (Serial No. 0001E thru 0508E), and 369F/FF (Serial No. 0003 thru 0091) series helicopters, equipped with fuel vent line emergency shutoff valve assemblies, part number (P/N) 369H8108, 369H8108-501 or 369H8108-503, certificated in any category.

Compliance: Helicopters with less than 2,400 hours time in service on the effective date of this AD shall be inspected on or before attaining 2,500 hours time in service, and thereafter, at an interval not to exceed 100 hours time in service from the last inspection until an improved fuel vent line emergency shutoff valve assembly (assembly) is installed in accordance with paragraph (d) of this AD. Helicopters with 2,400 hours or more time in service on the effective date of this AD shall be inspected in accordance with this AD within the next 100 hours time in service, and thereafter, at an interval not to exceed 100 hours time in service from the last inspection until an improved assembly is installed in accordance with paragraph (d) of this AD.

To prevent erroneously high inflight fuel quantity indications due to a blocked fuel vent line in the assembly, accomplish the following:

(a) Remove the assembly from the helicopter as required by the appropriate Model 369 maintenance manual.

(b) Inspect the valve in the following sequence:

(1) Hold the assembly vertically. Blow air into the assembly to determine if the valve is open. Visually inspect the vent tube for obstructions using a pen-light or equivalent light. (See Figure 1)

BILLING CODE 4910-13-M

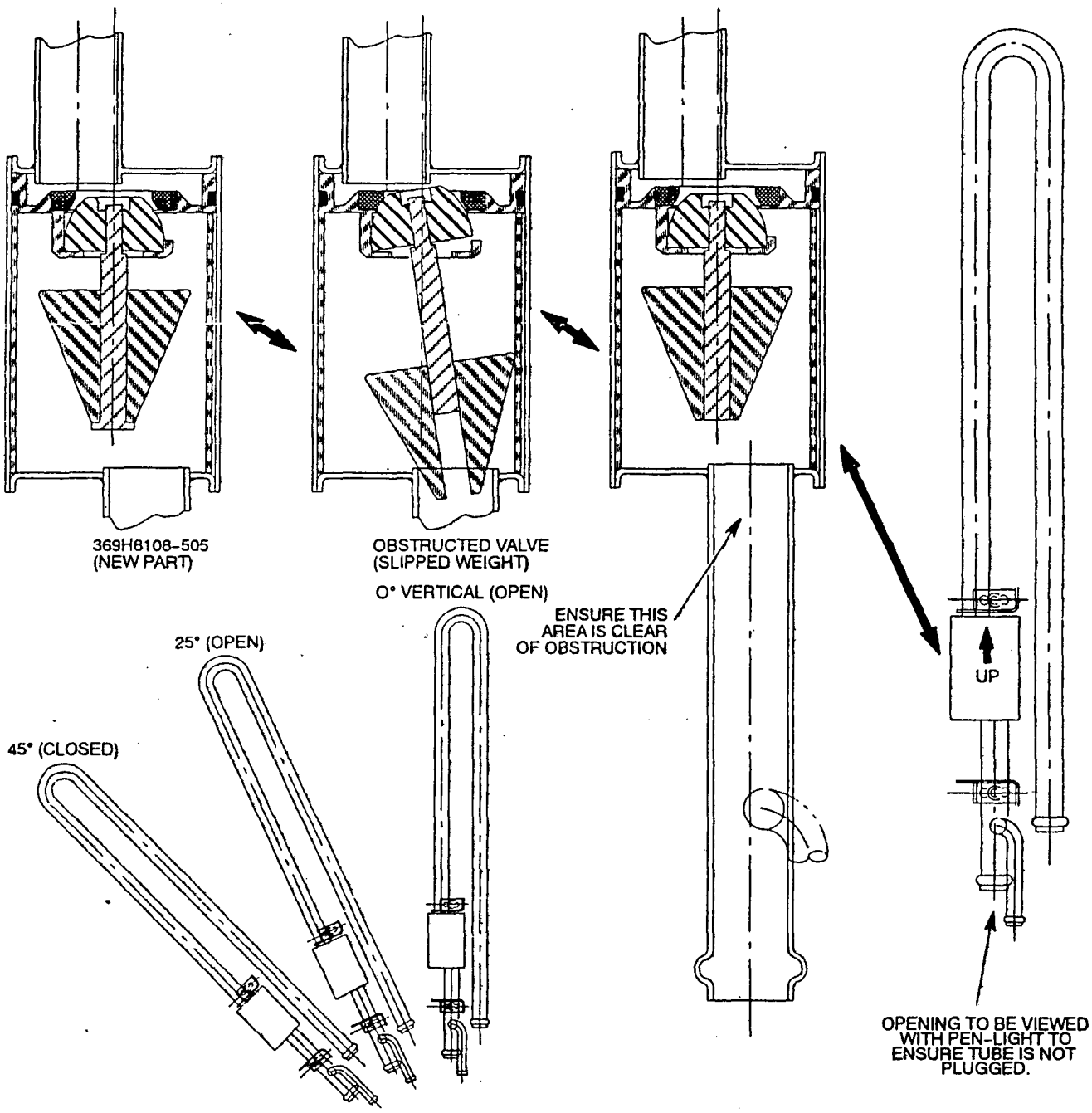

Figure 1. Inspection/Rework of Fuel Vent System.

BILLING CODE 4910-13-C

(2) Hold the assembly approximately 45 degrees from vertical. Blow air into the assembly to determine if the valve is correctly closed and thus blocks all air passage. (See Figure 1)

(3) Hold the assembly approximately 25 degrees from vertical. Blow air into the assembly to determine if the valve is open. (See Figure 1)

(4) Do not use compressed air in conducting these inspections.

(c) If the inspections conducted in accordance with the requirements of paragraph (b) uncover an incorrectly closed or obstructed valve, before further flight install assembly, P/N 369H8108-505 or higher dash number, or other airworthy assemblies in accordance with the appropriate Model 369 maintenance manual.

(d) Install assembly, P/N 369H8108-505 or higher dash number, as follows, unless already accomplished:

(1) For helicopters with 2,400 hours or more time in service on the effective date of this AD, install the assembly on or before attaining the next 600 hours time in service.

(2) For helicopters with less than 2,400 hours time in service on the effective date of this AD, install the assembly before attaining 3,000 hours time in service.

(e) An alternative method of compliance or adjustment of the compliance time, which provides an acceptable level of safety, may be used when approved by the Manager, Propulsion Branch, Los Angeles Aircraft Certification Office, 3229 E. Spring Street, Long Beach, California 90806-2425. Operators shall submit their request through an FAA Principal Maintenance Inspector, who may concur or comment and then send it to the Manager, Propulsion Branch, Los Angeles Aircraft Certification Office.

Note: Information concerning the existence of approved alternative methods of compliance with this AD, if any, may be obtained from the Manager, Los Angeles Aircraft Certification Office.

(f) Special flight permits may be issued in accordance with FAR 21.197 and 21.199 to operate the helicopter to a location where the requirements of this AD can be accomplished.

Issued in Fort Worth, Texas, on March 3, 1993.

James D. Erickson,

Manager, Rotorcraft Directorate, Aircraft Certification Service.

[FR Doc. 93-6612 Filed 3-22-93; 8:45 am]

BILLING CODE 4910-13-M

---

14 CFR Part 39

[Docket No. 91-ASW-11]

Airworthiness Directives; Schweizer Aircraft Corporation and Hughes Helicopters, Inc. Model 269A, 269A-1, 269B, and TH-55A Series Helicopters

AGENCY: Federal Aviation Administration, DOT.

ACTION: Supplemental notice of proposed rulemaking; reopening of comment period.

SUMMARY: This document revises an earlier proposed airworthiness directive (AD), applicable to Schweizer Aircraft Corporation and Hughes Helicopters, Inc. Model 269A, 269A-1, 269B, and TH-55A series helicopters, that would have required a new repetitive dye penetrant inspection of the tailboom center attachment (saddle) fitting. That proposal was prompted by reports of cracks in the fitting. This action revises the proposed rule by adding a proposal to replace the magnesium tailboom center attachment (saddle) fitting with a new aluminum fitting as a required terminating action. The actions specified by this proposed AD are intended to prevent fatigue failure of the magnesium tailboom center attachment (saddle) fitting that could result in loss of the tailboom and subsequent loss of control of the helicopter.

DATES: Comments must be received by May 7, 1993.

ADDRESSES: Submit comments in triplicate to the Federal Aviation Administration (FAA), Office of the Assistant Chief Counsel, Attention: Rules Docket No. 91-ASW-11, 4400 Blue Mound Road, Fort Worth, Texas 76106. Comments may be inspected at this location between 9 a.m. and 3 p.m., Monday through Friday, except Federal holidays.

The service information referenced in the proposed rule may be obtained from Schweizer Aircraft Corporation, P.O. Box 147, Elmira, New York 14902. This information may be examined at the FAA, Office of the Assistant Chief Counsel, 4400 Blue Mound Road, Bldg 3B, room 158, Fort Worth, Texas.

FOR FURTHER INFORMATION CONTACT: Mr. Anthony Socias, Aerospace Engineer, FAA, New York Aircraft Certification Office, Airframe Branch, ANE-172, New England Region, 181 S. Franklin Avenue, Valley Stream, New York 11581; telephone (516) 791-6220.

SUPPLEMENTARY INFORMATION:

Comments Invited

Interested persons are invited to participate in the making of the proposed rule by submitting such written data, views, or arguments as they may desire. Communications should identify the Rules Docket number and be submitted in triplicate to the address specified above. All communications received on or before the closing date for comments, specified above, will be considered before taking action on the proposed rule. The proposals contained in this notice may be changed in light of the comments received.

Comments are specifically invited on the overall regulatory, economic, environmental, and energy aspects of the proposed rule. All comments submitted will be available, both before and after the closing date for comments, in the Rules Docket for examination by interested persons. A report summarizing each FAA-public contact concerned with the substance of this proposal will be filed in the Rules Docket.

Commenters wishing the FAA to acknowledge receipt of their comments submitted in response to this notice must submit a self-addressed, stamped postcard on which the following statement is made: "Comments to Docket Number 91-ASW-11." The postcard will be date stamped and returned to the commenter.

Availability of Supplemental Notice of Proposed Rulemaking (SNPRM)

Any person may obtain a copy of this notice by submitting a request to the FAA, Office of the Assistant Chief Counsel, Attention: Rules Docket No. 91-ASW-11, 4400 Blue Mound Road, Fort Worth, Texas 76106.

Discussion: A proposal to amend part 39 of the Federal Aviation Regulations by superseding Airworthiness Directive (AD) 80-05-05, Amendment 39-3707 (45 FR 14540, March 6, 1980), applicable to Schweizer Aircraft Corporation and Hughes Helicopters, Inc. Model 269A, 269A-1, 269B, and TH-55A was published as a notice of proposed rulemaking (NPRM) in the **Federal Register** on June 26, 1991 (56 FR 29199). That NPRM proposed to retain the existing requirement for the initial and repetitive visual inspections required by AD 80-05-05 and to add a new requirement for a repetitive dye penetrant inspection. That NPRM was prompted by reports of cracks; these reports indicate that cracks may not be detected in a timely manner solely by visual inspection. That condition, if not corrected, could result in fatigue failure of the tailboom center attachment (saddle) fittings, loss of the tailboom, and subsequent loss of control of the helicopter.

Since the issuance of that NPRM, Schweizer Aircraft Corporation, the only commenter on the NPRM, has submitted additional information gained from an accident investigation involving a Model TH-55A helicopter. The investigation report states that the magnesium tail boom center attachment (saddle) fitting contained several cracks that resulted in complete separation of

the left and right lugs of the fitting. Some of the cracks may have been undetected for a significant period of time prior to separation of the fitting. Extensive evidence of fretting and corrosion was found on the fitting. Fretting and corrosion have been reported previously on Models 269A, 269A-1, 269B, and TH-55A saddle fittings.

Schweizer Aircraft Corporation has since issued Service Bulletin B-238.1, dated November 7, 1991, which describes procedures for an initial dye penetrant inspection, repetitive visual and dye penetrant inspection for cracks, and a terminating action for the inspections. The bulletin also describes procedures for the replacement of the magnesium tailboom center attachment (saddle) fitting, P/N 269A2324 (BSC) or 269A2324-7, with new aluminum fittings for Model 269A, 269A-1, 269B, and TH-55A helicopters.

Because of the extensive fretting and corrosion that were found on the accident aircraft, the FAA proposes that all magnesium tailboom center attachment (saddle) fittings continue to be inspected using a 10-power magnifying glass but further proposes a repetitive dye penetrant inspection of these fittings until they are removed from service. Based on these safety concerns and upon further review, the FAA has determined that it is necessary to revise the notice to propose a terminating modification. Also, the FAA has reordered the paragraphs of this proposed rule by inserting the replacement instructions proposed by paragraph (c) of the NPRM into paragraphs (a) and (b), and renumbering all paragraphs accordingly.

Since these changes expand the scope of the originally proposed rule, the FAA has determined that it is necessary to reopen the comment period to provide additional opportunity for public comment.

The FAA estimates that 512 helicopters of U.S. registry would be affected by this proposed AD, that it would take approximately 18 work hours per helicopter to accomplish the proposed actions, and that the average labor cost is $55 per work hour. Required parts would cost approximately $852 per helicopter. Based on these figures, the total cost impact of the proposed AD on U.S. operators is estimated to be $943,104.

The regulations proposed herein would not have substantial direct effects on the States, on the relationship between the national government and the States, or on the distribution of power and responsibilities among the various levels of government. Therefore, in accordance with Executive Order 12612, it is determined that this proposal would not have sufficient federalism implications to warrant the preparation of a Federalism Assessment.

For the reasons discussed above, I certify that this proposed regulation (1) is not a "major rule" under Executive Order 12291; (2) is not a "significant rule" under DOT Regulatory Policies and Procedures (44 FR 11034, February 26, 1979); and (3) if promulgated, will not have a significant economic impact, positive or negative, on a substantial number of small entities under the criteria of the Regulatory Flexibility Act. A copy of the draft regulatory evaluation prepared for this action is contained in the Rules Docket. A copy of it may be obtained by contacting the Rules Docket at the location provided under the caption **ADDRESSES**.

List of Subjects in 14 CFR Part 39

Air transportation, Aircraft, Aviation safety, Safety.

The Proposed Amendment

Accordingly, pursuant to the authority delegated to me by the Administrator, the Federal Aviation Administration proposes to amend 14 CFR part 39 of the Federal Aviation Regulations as follows:

PART 39—AIRWORTHINESS DIRECTIVES

1. The authority citation for part 39 continues to read as follows:

Authority: 49 U.S.C. App. 1354(a), 1421, and 1423; 49 U.S.C. 106(g); and 14 CFR 11.89.

§ 39.13 [Amended]

2. Section 39.13 is amended by removing Amendment 39-3707 (45 FR 14540, March 6, 1980), AD 80-05-05, and adding the following new airworthiness directive:

Schweizer Aircraft Corporation and Hughes Helicopters, Inc.: Docket No. 91-ASW-11.

Applicability: All Model 269A, 269A-1, 269B, and TH-55A series helicopters, certificated in any category.

Compliance: Required as indicated, unless already accomplished.

To prevent fatigue failure of the magnesium tailboom center attachment (saddle) fitting that could result in loss of the tailboom of the helicopter, accomplish the following:

(a) For each helicopter with a magnesium tailboom center attachment (saddle) fitting, part number (P/N) 269A2324 (BSC) or 269A2324-7, with 4,000 or less hours time in service on the effective date of this AD, perform the following in accordance with the 269 Series Basic Handbook of Maintenance Information, as revised by Temporary Revision No. R-42, dated October 8, 1990 (HMI):

(1) Prior to further flight and thereafter at intervals not to exceed 50 hours time in service from the last inspection, visually inspect for fretting, corrosion, and cracks the magnesium tailboom center attachment (saddle) fitting and tailboom assembly using a 10-power or higher magnifying glass.

(2) Within the next 25 hours time in service after the effective date of this AD and thereafter at intervals not to exceed 100 hours time in service from the last inspection, inspect for cracks the magnesium tailboom center attachment (saddle) fitting using a dye penetrant inspection.

(3) If the magnesium tailboom center attachment (saddle) fitting, P/N 269A2324 (BSC) or 269A2324-7, is found unairworthy by the inspections required by this paragraph, before further flight remove and replace it with an airworthy aluminum tailboom center attachment (saddle) fitting, P/N 269A2324-13 (undrilled).

(4) Prior to accumulating 4,100 hours time in service, replace the magnesium tailboom center attachment (saddle) fitting, P/N 269A2324 (BSC) or P/N 269A2324-7, with an airworthy aluminum tailboom center attachment (saddle) fitting, P/N 269A2324-13 (undrilled).

(b) For each helicopter with a magnesium tailboom center attachment (saddle) fitting, P/N 269A2324 (BSC) or P/N 269A2324-7, with more than 4,000 hours time in service on the effective date of the AD, perform the following in accordance with the HMI:

(1) Before the first flight of each day, visually inspect for fretting, corrosion and cracks the tailboom center attachment (saddle) fitting and tailboom using a 10-power or higher magnifying glass.

(2) Prior to further flight after the effective date of this AD and thereafter at an interval not to exceed 50 hours time in service from the last inspection, inspect for cracks the tailboom center attachment (saddle) fitting using a dye penetrant inspection.

(3) If the magnesium tailboom center attachment (saddle) fitting, P/N 269A2324 (BSC) or 269A2324-7, is found unairworthy by the inspections required by this paragraph, before further flight, remove and replace it with an airworthy aluminum tailboom center attachment (saddle) fitting, P/N 269A2324-13 (undrilled).

(4) Within the next 100 hours time in service, replace the magnesium tailboom center attachment (saddle) fitting, P/N 269A2324 (BSC) or 269A2324-7, with an airworthy aluminum tailboom center attachment (saddle) fitting, P/N 269A2324-13 (undrilled).

(c) Installation of an aluminum tailboom center attachment (saddle) fitting, P/N 269A2324-13 (undrilled), constitutes terminating action for the requirements of this AD.

Note: Schweizer Aircraft Corporation Service Bulletin B-238.1 pertains to this AD.

(d) An alternative method of compliance or adjustment of the compliance time, which provides an acceptable level of safety, may be used when approved by the Manager, New York Aircraft Certification Office, 181 S. Franklin Avenue, Room 202, Valley Stream,

New York 11581–1145. Operators shall submit their requests through an FAA Principal Maintenance Inspector, who may concur or comment and then send it to the Manager, New York Aircraft Certification Office.

Note: Information concerning the existance of approved alternative methods of compliance with this AD, if any, may be obtained from the Manager, New York Aircraft Certification Office.

(e) Special flight permits may be issued in accordance with FAR 21.197 and 21.199 to operate the helicopter to a location where the requirements of this AD can be accomplished.

Issued in Fort Worth, Texas, on March 3, 1993.

James D. Erickson,

Manager, Rotorcraft Directorate, Aircraft Certification Service.

[FR Doc. 93–6611 Filed 3–22–93; 8:45 am]

BILLING CODE 4910–13–M

---

14 CFR Part 39

[Docket No. 92–NM–213–AD]

Airworthiness Directives; Short Brothers Model SD3–30 Series Airplanes

AGENCY: Federal Aviation Administration, DOT.

ACTION: Notice of proposed rulemaking (NPRM).

SUMMARY: This document proposes the adoption of a new airworthiness directive (AD) that is applicable to all Short Brothers Model SD3–30 series airplanes. This proposal would require rework of certain life-limited main landing gear (MLG) beam sub-assemblies to achieve a full service life; would establish a life limit on certain other MLG beam sub-assemblies; and would require subsequent replacement of certain life-limited MLG beam sub-assemblies. This proposal is prompted by fatigue testing, which revealed that certain MLG beam sub-assemblies have a specific life limit. The actions specified by the proposed AD are intended to prevent MLG failure, which could damage the airplane or reduce controllability of the airplane during takeoff or landing.

DATES: Comments must be received by May 17, 1993.

ADDRESSES: Submit comments in triplicate to the Federal Aviation Administration (FAA), Transport Airplane Directorate, ANM–103, Attention: Rules Docket No. 92–NM–213–AD, 1601 Lind Avenue, SW., Renton, Washington 98055–4056. Comments may be inspected at this location between 9 a.m. and 3 p.m., Monday through Friday, except Federal holidays.

The service information referenced in the proposed rule may be obtained from Short Brothers, PLC, 2011 Crystal Drive, suite 713, Arlington, Virginia 22202–3719. This information may be examined at the FAA, Transport Airplane Directorate, 1601 Lind Avenue, SW., Renton, Washington.

FOR FURTHER INFORMATION CONTACT: Mr. William Schroeder, Aerospace Engineer, Standardization Branch, ANM–113, FAA, Transport Airplane Directorate, 1601 Lind Avenue, SW., Renton, Washington 98055–4056; telephone (206) 227–2148; fax (206) 227–1320.

SUPPLEMENTARY INFORMATION:

Comments Invited

Interested persons are invited to participate in the making of the proposed rule by submitting such written data, views, or arguments as they may desire. Communications shall identify the Rules Docket number and be submitted in triplicate to the address specified above. All communications received on or before the closing date for comments, specified above, will be considered before taking action on the proposed rule. The proposals contained in this notice may be changed in light of the comments received.

Comments are specifically invited on the overall regulatory, economic, environmental, and energy aspects of the proposed rule. All comments submitted will be available, both before and after the closing date for comments, in the Rules Docket for examination by interested persons. A report summarizing each FAA-public contact concerned with the substance of this proposal will be filed in the Rules Docket.

Commenters wishing the FAA to acknowledge receipt of their comments submitted in response to this notice must submit a self-addressed, stamped postcard on which the following statement is made: "Comments to Docket Number 92–NM–213–AD." The postcard will be date stamped and returned to the commenter.

Availability of NPRMs

Any person may obtain a copy of this NPRM by submitting a request to the FAA, Transport Airplane Directorate, ANM–103, Attention: Rules Docket No. 92–NM–213–AD, 1601 Lind Avenue, SW., Renton, Washington 98055–4056.

Discussion

The Civil Aviation Authority (CAA), which is the airworthiness authority for the United Kingdom, recently notified the FAA that an unsafe condition may exist on all Short Brothers Model SD3–30 series airplanes. The CAA advises that fatigue testing of the main landing gear (MLG) on Short Brothers Model SD3–30 series airplanes revealed that certain MLG beam sub-assemblies, part numbers 17604–9, –13, and –13A/14A, have a limited service life of 20,000 landings. In order to achieve this service life of 20,000 landings, these MLG beam sub-assemblies, part numbers 17604–9 and –13 need to be reworked prior to the accumulation of 13,500 total landings. In addition, the same fatigue testing revealed that certain other MLG beam sub-assemblies, part numbers 17604–15/16 and –17/18, can achieve a full service life if they are reworked in a certain manner. Main landing gear beam sub-assemblies with fatigue damage, if not detected and reworked or replaced, could lead to MLG failure, which could damage the airplane or reduce controllability of the airplane during takeoff or landing.

Short Brothers, PLC, has issued Shorts SD3–30 Service Bulletin SD3–32–90, Revision 2, dated June 29, 1992, which describes procedures for replacement of certain MLG beam sub-assemblies. This service bulletin refers to Menasco Service Bulletin 32–65, Revision 2, dated October 13, 1982, for additional service information. (Menasco Manufacturing of Canada, Limited, is the manufacturer of the MLG beam sub-assemblies.) The Menasco service bulletin describes procedures for rework of certain MLG beam sub-assemblies, and establishes a life limit of 20,000 landings on certain other MLG beam sub-assemblies. The CAA classified the Shorts service bulletin as mandatory.

This airplane model is manufactured in the United Kingdom and is type certificated for operation in the United States under the provisions of Section 21.29 of the Federal Aviation Regulations and the applicable bilateral airworthiness agreement. Pursuant to this bilateral airworthiness agreement, the CAA has kept the FAA informed of the situation described above. The FAA has examined the findings of the CAA, reviewed all available information, and determined that AD action is necessary for products of this type design that are certificated for operation in the United States.

Since an unsafe condition has been identified that is likely to exist or develop on other airplanes of the same type design registered in the United States, the proposed AD would require rework of certain life-limited MLG beam sub-assemblies to achieve a full service life; would establish a life limit on certain other MLG beam sub-assemblies;

and would require subsequent replacement of certain life-limited MLG beam sub-assemblies. The actions would be required to be accomplished in accordance with the Short Brothers service bulletin described previously.

This proposed AD would establish a "grace period" of up to 2,300 landings after the effective date of the final rule to allow operators to accomplish rework and replacement of certain MLG beam sub-assemblies. This "grace period" is necessary to prevent the grounding of airplanes that would accumulate 13,500 total landings prior to or soon after the effective date of the final rule. This "grace period" would allow operators the opportunity to plan for modification of the affected fleet. Modification would entail removal of the MLG beam sub-assemblies for rework, shipment to the manufacturer of the MLG beam sub-assemblies, and reinstallation; this may be a lengthy process. Operators who utilize all or part of this "grace period" prior to accomplishing the requirements of this proposed AD should note that the ultimate life limit may be reduced on those MLG beam sub-assemblies that are not modified prior to the accumulation of 13,500 total landings.

The FAA estimates that 55 airplanes of U.S. registry would be affected by this proposed AD. Of these airplanes, 49 would be required to accomplish the proposed rework only; 3 would be required to accomplish the proposed replacement only; and 3 would be required to accomplish the proposed replacement and rework.

The FAA estimates that it would take approximately 14 work hours per airplane to accomplish the proposed rework, and that the average labor rate is $55 per work hour. Rework (performed by the MLG beam sub-assembly manufacturer) would cost approximately $12,402 per airplane. The total cost impact of this AD for the 49 airplanes requiring the proposed rework is estimated to be $645,428, or $13,172 per airplane.

The FAA estimates that it would take approximately 14 work hours per airplane to accomplish the proposed replacement, and that the average labor rate is $55 per work hour. Parts cost to accomplish the proposed replacement would cost approximately $70,196 per airplane. The total cost impact of this AD for the 3 airplanes requiring the proposed replacement is estimated to be approximately $212,898, or $70,966 per airplane.

The FAA estimates that it would take approximately 28 work hours per airplane to accomplish the proposed replacement and rework, and that the average labor rate is $55 per work hour. Parts cost to accomplish the proposed replacement would cost approximately $70,196 per airplane, and rework (performed by the MLG beam sub-assembly manufacturer) would cost approximately $12,402 per airplane. The total cost impact of this AD for the 3 airplanes requiring the proposed replacement and rework is estimated to be $252,414, or $84,138 per airplane.

Based on these figures, the total cost impact of the proposed AD on U.S. operators is estimated to be $1,110,740. This total cost figure assumes that no operator has yet accomplished the proposed requirements of this AD action.

The regulations proposed herein would not have substantial direct effects on the States, on the relationship between the national government and the States, or on the distribution of power and responsibilities among the various levels of government. Therefore, in accordance with Executive Order 12612, it is determined that this proposal would not have sufficient federalism implications to warrant the preparation of a Federalism Assessment.

For the reasons discussed above, I certify that this proposed regulation: (1) Is not a "major rule" under Executive Order 12291; (2) is not a "significant rule" under the DOT Regulatory Policies and Procedures (44 FR 11034, February 26, 1979); and (3) if promulgated, will not have a significant economic impact, positive or negative, on a substantial number of small entities under the criteria of the Regulatory Flexibility Act. A copy of the draft regulatory evaluation prepared for this action is contained in the Rules Docket. A copy of it may be obtained by contacting the Rules Docket at the location provided under the caption "ADDRESSES."

List of Subjects in 14 CFR Part 39

Air transportation, Aircraft, Aviation safety, Safety.

The Proposed Amendment

Accordingly, pursuant to the authority delegated to me by the Administrator, the Federal Aviation Administration proposes to amend 14 CFR part 39 of the Federal Aviation Regulations as follows:

PART 39—AIRWORTHINESS DIRECTIVES

1. The authority citation for part 39 continues to read as follows:

Authority: 49 U.S.C. App. 1354(a), 1421 and 1423; 49 U.S.C. 106(g); and 14 CFR 11.89.

§ 39.13 [Amended]

2. Section 39.13 is amended by adding the following new airworthiness directive:

Short Brothers, PLC: Docket 92–NM–213–AD.

Applicability: All Model SD3–30 series airplanes, certificated in any category.

Compliance: Required as indicated, unless accomplished previously.

To prevent main landing gear (MLG) failure, which could damage the airplane or reduce controllability of the airplane during takeoff or landing, accomplish the following:

(a) For airplanes equipped with MLG beam sub-assembly part numbers 17604–9, –13, –15/16, or –17/18: Prior to the accumulation of 13,500 total landings or within 2,300 landings after the effective date of this AD, whichever occurs later, rework the MLG beam sub-assembly, in accordance with Shorts SD3–30 Service Bulletin SD3–32–90, Revision 2, dated June 29, 1992.

Note: Shorts SD3–30 Service Bulletin SD3–32–90, Revision 2, dated June 29, 1992, references Menasco Service Bulletin 32–65, Revision 2, dated October 13, 1982, for additional service information.

(b) For airplanes equipped with MLG beam sub-assembly part numbers 17604–9, –13, or –13A/14A: Prior to the accumulation of 20,000 total landings or within 2,300 landings after the effective date of this AD, whichever occurs later, and thereafter prior to the accumulation of 20,000 landings on any MLG beam sub-assembly, replace it with a serviceable unit, in accordance with Shorts SD3–30 Service Bulletin SD3–32–90, Revision 2, dated June 29, 1992.

(c) An alternative method of compliance or adjustment of the compliance time that provides an acceptable level of safety may be used if approved by the Manager, Standardization Branch, ANM–113, FAA, Transport Airplane Directorate. Operators shall submit their requests through an appropriate FAA Principal Maintenance Inspector, who may add comments and then send it to the Manager, Standardization Branch, ANM–113.

Note: Information concerning the existence of approved alternative methods of compliance with this AD, if any, may be obtained from the Standardization Branch, ANM–113.

(d) Special flight permits may be issued in accordance with FAR 21.197 and 21.199 to operate the airplane to a location where the requirements of this AD can be accomplished.

Issued in Renton, Washington, on March 17, 1993.

Darrell M. Pederson,

Acting Manager, Transport Airplane Directorate, Aircraft Certification Service.

[FR Doc. 93–6568 Filed 3–22–93; 8:45 am]

BILLING CODE 4910–13–M

DEPARTMENT OF HEALTH AND HUMAN SERVICES

Food and Drug Administration

21 CFR Part 350

[Docket No. 78N-0064]

RIN 0905-AA06

Antiperspirant Drug Products for Over-the-Counter Human Use

AGENCY: Food and Drug Administration, HHS.

ACTION: Request for comments.

SUMMARY: The Food and Drug Administration (FDA) is announcing an opportunity for public comment on two citizen petitions and a response that disagreed with one of the petitions. The citizen petitions request that the rulemaking for antiperspirant drug products for over-the-counter (OTC) human use be reopened to include new information, all aluminum compounds proposed for use in OTC antiperspirant drug products be reclassified as Category III (more data needed) until further studies are done to determine the amount absorbed following topical application and inhalational exposure, and the safety of these aluminum compounds be reevaluated, particularly their potential for skin absorption or toxic effects with long-term use.

DATES: Written comments by July 21, 1993.

ADDRESSES: Submit written requests for single copies of the citizen petitions and the response to one of the citizen petitions to the Freedom of Information Staff (HFI-35), Food and Drug Administration, 5600 Fishers Lane, Rockville, MD 20857. These three documents are available at a cost of $94.30 and contain 943 pages. Alternatively, a copy of the citizen petitions containing a bibliography without copies of the cited references, plus a copy of the response to one citizen petition, are available at a cost of $9.70 and contain 97 pages. Submit written comments or new data on OTC aluminum-containing antiperspirant drug products to the Dockets Management Branch (HFA-305), Food and Drug Administration, rm. 1-23, 12420 Parklawn Dr., Rockville, MD 20857. Requests and comments should be identified with the docket number found in brackets in the heading of this document.

FOR FURTHER INFORMATION CONTACT: William E. Gilbertson, Center for Drug Evaluation and Research (HFD-810), Food and Drug Administration, 5600 Fishers Lane, Rockville, MD 20857, 301-295-8000.

SUPPLEMENTARY INFORMATION: In the **Federal Register** of October 10, 1978 (43 FR 46694), FDA published, under § 330.10(a)(6) (21 CFR 330.10(a)(6)), an advance notice of proposed rulemaking to establish a monograph for OTC antiperspirant drug products, together with the recommendations of the Advisory Review Panel on OTC Antiperspirant Drug Products (the Panel), which was the advisory review panel responsible for evaluating data on the active ingredients in this drug class. The agency's proposed regulation, in the form of a tentative final monograph, for OTC antiperspirant drug products was published in the **Federal Register** of August 20, 1982 (47 FR 36492). A final regulation has not been published to date.

The Panel classified the ingredients it reviewed into three categories: (1) "Category I" (generally recognized as safe and effective and not misbranded), (2) "Category II" (not generally recognized as safe and effective or misbranded), and (3) "Category III" (available data are insufficient to classify as safe and effective, and further testing is required). The OTC drug procedural regulations (21 CFR 330.10) provide that any testing necessary to resolve the safety or effectiveness issues resulting from a Category III classification, and submission to FDA of the results of that testing or any other data, must be done during the OTC drug rulemaking process before the establishment of a final monograph.

The Panel considered aluminum-containing antiperspirant ingredients applied directly to the skin in nonaerosol dosage forms (e.g., lotion, cream, stick, or roll-on) to be safe (43 FR 46694 at 46707 and 46708). However, the Panel had safety concerns about long-term use of aerosol dosage forms and recommended Category III status until further safety studies were conducted (43 FR 46708 to 46711). The agency adopted the Panel's Category I recommendations for nonaerosol dosage forms (47 FR 36492 at 36502) and, based on new data, proposed Category I status for aerosol dosage forms of the various aluminum chlorohydrate antiperspirant ingredients (47 FR 36498).

FDA has been petitioned (Ref. 1) under the provisions of § 10.30 (21 CFR 10.30) to reclassify all aluminum compounds proposed for use in OTC antiperspirant drug products from Category I to Category III until further absorption studies are done to determine the amount of aluminum absorbed following topical application and inhalation exposure. (The petition also requested FDA to amend its regulations to revoke the use of aluminum compounds as food substances; however, this notice addresses only the uses of aluminum compounds in OTC antiperspirant drug products.) Subsequently, the agency received a comment (Ref. 2) that objected to the conclusions of the petition. The comment argued that current scientific information does not support the need to reclassify the safety of aluminum-containing materials, such as foods and antiperspirants. Subsequently, FDA received a second petition (Ref. 3) under the provisions of § 10.30 to reopen the rulemaking to include new information, revoke the Category I classification of aerosol dosage forms, reclassify nonaerosol aluminum-containing dosage forms as Category III, and require reevaluation of their potential for skin absorption or toxic effects with long-term use. Both petitions and the response to the first petition are on public display in the Dockets Management Branch.

I. Current Regulatory Status of Aluminum-Containing OTC Antiperspirant Drug Products

Both the Panel, in its advance notice of proposed rulemaking (43 FR 46694 at 46718), and the agency, in its tentative final monograph (47 FR 36492 at 36502), proposed Category I status for aluminum-containing and aluminum zirconium-containing antiperspirant active ingredients in topical nonaerosol dosage formulations. The Panel discussed the safety of antiperspirants and stated (43 FR 46707):

> * * * Because of the relatively impermeable properties of the skin to metallic salts and complexes, there is no evidence to suggest that the direct application of antiperspirant products to intact skin has been associated with systemic toxic effects.
>
> Percutaneous dermal toxicity tests have been performed on animals for a great number of antiperspirants. The reported results indicated no ill effects on the animals.

The Panel questioned the safety of the long-term use of these ingredients when applied in an aerosol form (43 FR 46707) and classified all aluminum-containing aerosol antiperspirant products in Category III (43 FR 46725). The Panel stated that the decision to require added testing for aerosol products reflected the fact that damage to the lung, by occurring more insidiously, carries a greater potential for serious illness than damage to the skin (43 FR 46718).

New data were submitted after publication of the Panel's report and were discussed by the agency in the tentative final monograph (43 FR 36492

at 36498). The agency tentatively concluded that the data appeared to be adequate to establish the safe and effective use of OTC aerosol antiperspirants by consumers (47 FR 36498). The agency also proposed the following additional label warning for aerosol antiperspirants in § 350.50(c): "Avoid excessive inhalation." (See comment 22, 47 FR 36498.) However, this warning is not required to appear in product labeling until the effective date of a final monograph. In the interim, OTC aluminum-containing aerosol and aluminum and zirconium-containing nonaerosol antiperspirant drug products currently included in the pending rulemaking for OTC antiperspirant drug products may remain in the marketplace while the agency considers the comments received in response to this notice and develops a final rule for these OTC drug products.

II. Summary of First Petitioner's Views

The following narrative summarizes the information and arguments presented by the first petitioner. The material included in the narrative does not necessarily represent the views of the agency.

The petitioner contended that the use of aluminum in antiperspirants needs to be further studied, particularly the amount absorbed following both inhalational exposure and topical application to the skin. The petitioner mentioned that many published articles that were not discussed by the Panel or by the agency discuss the systemic toxicity and neurotoxicity of aluminum. The petitioner noted that, since the antiperspirant tentative final monograph was issued in 1982, many new studies of aluminum toxicology have been conducted and a growing number of studies show that aluminum is a powerful neurotoxin (Refs. 4 and 5).The petitioner claimed that when taken orally or when inhaled, aluminum can be absorbed and get into the blood; a fraction of aluminum in the blood enters the brain, where it remains and accumulates (Ref. 5). Once in the brain, the petitioner stated, the aluminum can disrupt many normal cellular activities. The petitioner mentioned that animal experiments show that aluminum causes a variety of neurotoxic effects on the brain (Refs. 6 through 11) and in vitro studies show neurotoxic effects on human neurons (Refs. 12 and 13). The comment also stated that human epidemiology studies associate aluminum with neurotoxicity.

The petitioner noted that Perl and Good (Ref. 14) have proposed that inhaled aluminum compounds may be taken directly into the brain by a nasal-olfactory pathway, and this is supported by studies by Pearson et al., who found that olfactory areas of the brain are invariably severely involved (Ref. 15). The petitioner suggested that this may be a mechanism by which aerosolized aluminum compounds in antiperspirants cause Alzheimer's disease. The petitioner stated that a case control study showed epidemiologic evidence of a relationship between aluminum-containing antiperspirants and Alzheimer's disease (Ref. 16).

The petitioner stated that studies show that aluminum can be absorbed when aluminum compounds are inhaled (Refs. 17 through 21). The petitioner contended that there have been no studies measuring the amount of aluminum absorbed systemically by inhalation of aerosolized antiperspirants, and that there has only been consideration of whether aerosolized antiperspirants would cause accumulation of aluminum compounds in the lung, and whether that would cause lung damage (43 FR 46694 at 46708 to 46711). The petitioner also contended that there have been no studies measuring the amount of aluminum absorbed systemically through the skin when antiperspirants are applied on the skin. The petitioner stated that the Panel only mentioned the "relatively impermeable properties of the skin to metallic salts and complexes" (43 FR 46707), but did not quantify the term "relatively impermeable." The petitioner concluded that the use of aluminum in antiperspirants needs to be further studied because it is not known how much aluminum is absorbed, or whether the amounts absorbed are unsafe. The comment added that measurement of absorption is crucial for risk assessment, and that such measurements should be performed before the use of aluminum in antiperspirants receives final monograph approval.

Accordingly, the petitioner requested that: (1) The rulemaking for OTC antiperspirant drug products be reopened, (2) all aluminum compounds proposed for use in OTC antiperspirant drug products be reclassified as Category III until further studies are done to determine the amount absorbed following topical application and inhalational exposure, and (3) the safety of these aluminum compounds, based on the new absorption data, be reevaluated after these studies are done and the compounds then reclassified as Category I or Category II.

III. Summary of the Comment on the First Petition

The comment stated that it had reviewed the published data, including the references cited by the petitioner, and concluded that the data do not support the petitioner's conclusion that the concentration of aluminum in products such as foods and antiperspirants poses a potentially significant neurotoxic risk. The comment contended that the majority of the references cited by the petitioner describe findings from in vitro studies. According to the comment, the studies did not consider the blood-brain barrier, which is the brain's main defense against potentially toxic substances such as aluminum. The comment added that extraordinarily high concentrations of aluminum were used in these studies, and these levels are never approached under physiological conditions or even in pathological states, such as in dialysis encephalopathy. The comment stated that the doses of aluminum that cross the blood-brain barrier must be considered in the aphysiological range. The comment concluded that aluminum from food additives or antiperspirants would not enter the brain in biologically significant concentrations.

The comment also objected to the petitioner's contention that the inhalation of aluminum antiperspirants poses a special risk because this route of delivery bypasses the blood-brain barrier. The comment calculated that an inhalation study (Ref. 19) cited by the petitioner, in which rabbits were exposed to aluminum oxide inhalation for 8 hours per day, 5 days per week for 5 months, would be equivalent to a person using spray deodorants for approximately 10 seconds daily for 789 years. The comment concluded that generalization from this rabbit inhalation study to humans was strained at best.

The comment also disagreed with the petitioner's statement that "aluminum plays a role in Alzheimer's disease * * *." The comment felt that the majority of researchers investigating the etiology of Alzheimer's disease probably would not agree with the petitioner's position. The comment stated that aluminum encephalopathy dialysis patients do not exhibit neurofibrillary tangles or plaques in their brains as do patients with Alzheimer's disease. The comment also stated that neurofibrillary tangles in experimental animals with aluminum injected into their brains differ from the tangles seen in Alzheimer's disease. The comment concluded that current scientific information does not support the need to reclassify the safety of

aluminum-containing materials such as antiperspirants.

IV. Summary of Second Petitioner's Views

The following narrative summarizes the information and arguments presented by the second petitioner. The material included in the narrative does not necessarily represent the views of the agency.

The petitioner agreed with the position taken by the first petitioner that aluminum compounds that are proposed for use in antiperspirant drug products for OTC use need to be reconsidered for safety in view of recent concerns about aluminum neurotoxicity and systemic toxicity. The petitioner also contended that there is a lack of adequate data on the absorption of aluminum from topical or inhaled antiperspirants.

The petitioner requested that FDA revoke its decision in the tentative final monograph to reclassify aerosol dosage forms of aluminum chlorohydrate antiperspirants from Category III to Category I (47 FR 36492 at 36498) because the long-term lung inhalation studies in rats used to support this decision show that aluminum absorption occurs at the peribronchial lymph nodes, and increased aluminum levels are detected in the rat brain and adrenal glands after 12 and 24 months.

The petitioner requested that FDA reclassify non-aerosol dosage forms of aluminum-containing antiperspirants to Category III in order to permit a re-evaluation of their potential for skin absorption or toxic systemic effects following long-term use. The petitioner pointed out that the Panel concluded that because of the relatively impermeable properties of the skin to metallic salts and complexes, there is no evidence to suggest that direct application of antiperspirant products to intact skin has been associated with systemic toxic effects. The petitioner stated that reports show that metal ions do absorb through the skin, and aluminum ions in antiperspirant formulations theoretically appear especially likely to be absorbed. The petitioner further stated that experimental evidence is accumulating to indicate that chronic exposure to low levels of aluminum may lead to neurological disorders, and that there is a reported association between Alzheimer's disease and the exposure to aluminum through lifetime use of antiperspirants.

The petitioner also requested that FDA revise and expand the proposed warning for aluminum-containing aerosols in § 350.50(c)(2), which states "avoid excessive inhalation," to better clarify the safety concern.

V. The Agency's Consideration of Aluminum-Containing Drugs in Other OTC Drug Rulemakings

Since publication of the tentative final monograph for OTC antiperspirant drug products on August 20, 1982, the agency has evaluated substantial additional data on the safety of aluminum compounds used in other categories of OTC drug products. These safety evaluations have some bearing on the issues raised by the petitioners.

A. Topical OTC Drug Products Containing Aluminum

Several other OTC advisory review panels have concluded that various aluminum salts are safe for topical use in other OTC drug products: e.g., acne (March 23, 1982, 47 FR 12430 at 12450), antifungal (March 23, 1982, 47 FR 12480 at 12525), astringent (September 7, 1982, 47 FR 39412 at 39427), and skin protectant (August 4, 1978, 43 FR 34628 at 34634). These conclusions were generally based on the following considerations: (1) Metals are not generally absorbed through the skin. (2) Aluminum salts precipitate protein and may form a superficial protective layer on mucous membranes or damaged skin (Refs. 22, 23, and 24). The Antimicrobial II Panel stated that with protein precipitates, absorption through the skin is probably minimal (47 FR 12430 at 12450). (3) There is an absence of aluminum toxicity reported in the current literature and in standard references (Refs. 24 through 27). (4) There has been a wide clinical usage of aluminum salts topically. (5) There has also been a wide clinical usage of oral aluminum as an antacid, with a minimal degree of absorption of ingested aluminum (Ref. 28).

B. OTC Antacid Drug Products

The agency has evaluated the involvement of aluminum with dialysis encephalopathy and osteomalacia in the **Federal Register** of January 15, 1985 (50 FR 2160 at 2165) and May 11, 1990. In the May 11, 1990 publication (55 FR 19852 at 19856), the agency stated:

> When the agency last evaluated this issue prior to publishing the proposed antacid monograph amendment to add professional labeling warnings for OTC aluminum-containing antacids (50 FR 2160 at 2165), the relationship of aluminum to bone disease was not established. There was even some doubt about the relationship of aluminum to encephalopathy (a toxic degeneration of the brain) at that time. Subsequently it has become clear that both encephalopathy and osteomalacia (softening of the bones) can be caused by long-term use of aluminum in renal dialysis patients * * *. Long-term use of aluminum-containing antacids contributes to dialysis osteomalacia * * *. Although only a small fraction of ingested aluminum is absorbed, that amount must be removed by functioning kidneys, bile secretion, or dialysis, or else it will accumulate. Dialysis does not remove aluminum well because the aluminum is bound to albumin and transferrin, which do not cross dialysis membranes. When aluminum accumulates, it tends to be deposited in bone * * * at the mineralization front, blocking mineralization of newly formed bone, increasing calcium loss from bone into serum, and producing osteomalacia * * *. The agency believes that the role of aluminum is significant and that attempts should be made to reduce its contribution to renal osteodystrophy.

The agency further noted that the dialysis encephalopathy, discussed in this section, that was due to aluminum resulted from two factors: (1) Oral aluminum-containing antacids taken as phosphate binders, and (2) aluminum-containing dialysis fluids. Subsequently, in the **Federal Register** of May 11, 1990 (55 FR 19852 at 19859), the agency added the following warning to the monograph for OTC antacid drug products under § 331.80(a)(4)(i):

> Prolonged use of aluminum-containing antacids in patients with renal failure may result in or worsen dialysis osteomalacia. Elevated tissue aluminum levels contribute to the development of the dialysis encephalopathy and osteomalacia syndromes. Small amounts of aluminum are absorbed from the gastrointestinal tract and renal excretion of aluminum is impaired in renal failure. Aluminum is not well removed by dialysis because it is bound to albumin and transferrin, which do not cross dialysis membranes. As a result, aluminum is deposited in bone, and dialysis osteomalacia may develop when large amounts of aluminum are ingested orally by patients with impaired renal function.

The Panel and the agency did not discuss Alzheimer's disease or other neurological disorders in prior publications in the antiperspirant rulemaking. However, the agency did discuss Alzheimer's disease in the **Federal Register** of January 15, 1985 (50 FR 2160 and 2161), covering OTC hypophosphatemia drug products. The agency reviewed the literature available up to 1981, which included some of the early articles submitted by the first petitioner. The agency also noted that Perl and Brody (Ref. 29) studied the aluminum content within individual neurons of brain tissue from three cases of Alzheimer's disease and three nondemented controls. They found that aluminum is frequently present in the nuclei of neurons with neurofibrillary tangles both in the presence and absence of Alzheimer's disease, although neurons with neurofibrillary tangles were found more often in the

Alzheimer's patients. However, the agency pointed out that other investigators found no significant difference in the aluminum content of Alzheimer's patients and normal controls and found no correlation between neurofibrillary tangle formations and aluminum content (50 FR 2161).

The agency noted that aluminum can produce some of the histopathological and clinical features of Alzheimer's disease in certain animal species when aluminum salts are injected into different areas of the brain. However, the agency questioned the relationship of changes induced in these animals to humans, particularly in view of the unphysiological route of administration of the aluminum in the studies (50 FR 2161). The agency quoted a 1980 editorial on Alzheimer's disease in the *British Medical Journal* that "Despite the plethora of hypotheses, however, objective analysis of all the data--immunological, genetic, virological, pathological, and biochemical--shows that we still have no idea of the aetiology of Alzheimer's disease," (50 FR 2161). The agency concluded at that time that a role for aluminum in the pathogenesis of Alzheimer's disease cannot be ruled out, but the evidence supporting such a role is very weak (50 FR 2162).

VI. Request for Comments

The petitions and the comment discussed above raise issues that need to be considered before FDA makes a final decision on the safety of aluminum-containing and aluminum zirconium-containing antiperspirant drug products. At this time, the agency has not decided whether it should grant the petitioners' requests. In an effort to determine whether further study should be required to assess the safety of aluminum antiperspirants before issuing a final monograph, FDA is seeking public comments. In accordance with § 10.30(h)(3) (21 CFR 10.30(h)(3)), FDA is seeking public comments on the following questions before reaching any decision on the petitions:

(1) As described above, there is already a considerable amount of safety data concerning aluminum toxicity. Are these data sufficient to retain aluminum-containing and aluminum zirconium-containing OTC antiperspirants in Category I?

(2) If more data are needed to support safety, what data are needed and what testing should be required? What kind of absorption studies should be conducted to determine the level, if any, of aluminum that is absorbed through the skin and deposited in organs, such as the lungs and brain, from direct application of antiperspirant drug products? What levels of aluminum absorption would be considered low enough to be safe?

(3) If aluminum-containing and aluminum zirconium-containing antiperspirants were found to be unsafe, there would no longer be any ingredients in the OTC antiperspirant drug products monograph. FDA is seeking public comment on whether any ingredients that do not contain aluminum may be suitable for review as OTC antiperspirant drug products.

The agency is currently developing the final rule for OTC antiperspirant drug products. The agency will consider the comments received in response to this notice and then decide whether to grant the petitioners' requests or proceed to publish the final rule.

The complete petitions are on public display between 9 a.m. and 4 p.m., Monday through Friday, in the Dockets Management Branch. Requests for single copies of the petitions may be submitted to the Freedom of Information Staff (address above).

Interested persons may, on or before July 21, 1993, submit to the Dockets Management Branch (HFA-305) (address above) written comments regarding this petition and the comment on the petition. Three copies of any comments are to be submitted except that individuals may submit one copy. Comments are to be identified with the docket number found in brackets in the heading of this document and may be accompanied by a supporting memorandum or brief. The petitions, the comment, other information discussed above, and any comments received in response to this request for comments may be seen in the office above between 9 a.m. and 4 p.m., Monday through Friday. After reviewing the comments and other information received, FDA will respond to the petitions.

VII. References

(1) Citizen Petition CP2, Docket No. 78N-0064, Dockets Management Branch.

(2) Comment C42, Docket No. 78N-0064, Dockets Management Branch.

(3) Citizen Petition CP3, Docket No. 78N-0064, Dockets Management Branch.

(4) Boegman, R. J., and L. A. Bates, "Neurotoxicity of Aluminum," *Canadian Journal of Physiology and Pharmacology*, 62:1010–1014, 1984.

(5) Ganrot, P. O., "Metabolism and Possible Health Effects of Aluminum," *Environmental Health Perspectives*, 65:363–441, 1986.

(6) Crapper, D. R., and A. J. Dalton, "Alterations in Short-term Retention, Conditioned Avoidance Response Acquisition and Motivation Following Aluminum Induced Neurofibrillary Degeneration," *Physiology and Behavior*, 10:925–933, 1973.

(7) Klatzo, I., H. Wisniewski, and E. Streicher, "Experimental Production of Neurofibrillary Degeneration. I. Light Microscopic Observations," *Journal of Neuropathology and Experimental Neurology*, 24:187–199, 1965.

(8) Lipman, J. J. et al., "Studies of Aluminum in Rat Brain," *Biological Trace Element Research*, 13:43–53, 1987.

(9) Petit, T. L., G. B. Biederman, and P. A. McMullen, "Neurofibrillary Degeneration, Dendritic Dying Back, and Learning-memory Deficits After Aluminum Administration: Implications for Brain Aging," *Experimental Neurology*, 67:152–162, 1980.

(10) Petit, T. L. et al., "Neurobehavioral Development Following Aluminum Administration in Infant Rabbits," *Experimental Neurology*, 88:640–651, 1985.

(11) Solomon, P. R. et al., "Disrupted Retention of the Classically Conditioned Nictitating Membrane Response in Rabbits With Aluminum-induced Neurofibrillary Degeneration," *NeuroToxicology*, 9:209–222, 1988.

(12) De Boni, U., M. Seger, and D. R. Crapper-McLachlan, "Functional Consequences of Chromatin Bound Aluminum in Cultured Human Cells," *Neurotoxicology*, 1:65–81, 1980.

(13) Nixon, R. A. et al., "Aluminum Inhibits Calpain-mediated Proteolysis and Induces Human Neurofilament Proteins to Form Protease-Resistant High Molecular Weight Complexes," *Journal of Neurochemistry*, 55:1950–1959, 1990.

(14) Perl, D. P., and P. F. Good, "Uptake of Aluminum Into Central Nervous System Along Nasal-olfactory Pathways," *Lancet*, i:1028, May 2, 1987.

(15) Pearson, R. C. et al., "Anatomical Correlates of the Distribution of the Pathological Changes in the Neocortex in Alzheimer Disease," *Proceedings of the National Academy of Sciences, USA*, 82:4531–4534, 1985.

(16) Graves, A. B. et al., "The Association Between Aluminum-containing Products and Alzheimer's Disease," *Journal of Clinical Epidemiology*, 43:35–55, 1990.

(17) Elinder, C. et al., "Evidence of Aluminum Accumulation in Aluminum Welders," *British Journal of Industrial Medicine*, 48:735–738, 1991.

(18) Mussi, I. et al., "Behaviour of Plasma and Urinary Aluminum Levels in Occupationally Exposed Subjects," *International Archives of Occupational and Environmental Health*, 54:155–161, 1984.

(19) Rollin, H. B., P. Theodorou, and T. A. Kilroe-Smith, "Deposition of Aluminum in Tissues of Rabbits Exposed to Inhalation of Low Concentrations of Al203 Dust," *British Journal of Industrial Medicine*, 48:389–391, 1991.

(20) Sjogren, B., I. Lundberg, and V. Lidums, "Aluminum in the Blood and Urine of Industrially Exposed Workers," *British Journal of Industrial Medicine*, 40:301–304, 1983.

(21) Sjogren, B. et al., "Exposure and Urinary Excretion of Aluminum During Welding," *Scandinavian Journal of Work and Environmental Health*, 11:39–43, 1985.

(22) Leyden, J., and A. Kligman, "Aluminum Chloride in the Treatment of Symptomatic Athlete's Foot," *Archives of Dermatology*, 111:1004–1010, 1975.

(23) Blank, I. H., J. L. Jones, and E. Gould, "A Study of the Penetration of Aluminum Salts into Excised Skin," *Proceedings of the Science Section Toilet Goods Association*, 29:32–35, 1958.

(24) Blacow, N. W., "Martindale. The Extra Pharmacopeia," 26th Ed., The Pharmaceutical Press, London, p. 260, 1972.

(25) Gosselin, R. E. et al., "Clinical Toxicology of Commercial Products," 4th Ed., The Williams and Wilkins Co., Baltimore, p. 89, 1976.

(26) Dreisbach, R. H., "Handbook of Poisoning: Diagnosis and Treatment," 8th Ed., Lange Medical Publications, Los Altos, CA, p. 371, 1974.

(27) Sax, N. I., "Dangerous Properties of Industrial Materials," 3d Ed., Reinhold Book Corp., New York, p. 391, 1968.

(28) Casarett, L. J., and J. Doull, editors, "Toxicology. The Basic Science of Poisons," Macmillan Publishing Co., Inc., New York, p. 463, 1975.

(29) Perl, D. P., and A. R. Brody, "Alzheimer's Disease: X-ray Spectrometric Evidence of Aluminum Accumulation in Neurofibrillary Tangle-bearing Neurons," Science, 208:297–299, 1980.

Dated: March 3, 1993.

Michael R. Taylor,

Deputy Commissioner for Policy.

[FR Doc. 93–6530 Filed 3–22–93; 8:45 am]

BILLING CODE 4160–01–F

DEPARTMENT OF THE INTERIOR

Office of Surface Mining Reclamation and Enforcement

30 CFR Part 938

Pennsylvania Abandoned Mine Lands Reclamation Plan

AGENCY: Office of Surface Mining Reclamation and Enforcement (OSM), Interior.

ACTION: Proposed rule.

SUMMARY: OSM is announcing receipt and requesting comments on a proposed amendment to the Pennsylvania Abandoned Mine Lands Reclamation Plan (hereinafter referred to as the Pennsylvania Plan) under the Surface Mining Control and Reclamation Act of 1977 (SMCRA). The proposed amendment provides for changes to the approved Pennsylvania Plan to allow for the initiation of a State administered emergency reclamation program.

This document sets forth the times and locations that the Pennsylvania plan and the proposed amendment to that plan are available for public inspection, the comment period during which interested persons may submit written comments on the amendment and the procedures that will be followed regarding the public hearing, if one is requested.

DATES: Written comments must be received on or before 4 p.m. on April 22, 1993 to ensure consideration in the rulemaking process. If requested, a public hearing on the amendment will be held at 9 a.m. on April 19, 1993. Requests to present testimony at the hearing must be received on or before 4 p.m. on April 7, 1993.

ADDRESSES: Written comments and requests to testify at the hearing should be mailed or hand delivered to Robert J. Biggi, Director, Harrisburg Field Office at the address listed below. Copies of the Pennsylvania plan, the proposed amendment, and all written comments received in response to this document will be available for public review at the addresses listed below during normal business hours, Monday through Friday, excluding holidays. Each requestor may receive, free of charge, one copy of the proposed amendment by contacting OSM's Harrisburg Field Office.

Office of Surface Mining Reclamation and Enforcement, Harrisburg Field Office, Harrisburg Transportation Center, Third Floor, Suite 3C, 4th and Market Streets, Harrisburg, Pennsylvania 17101, telephone: (717) 782–4036

Pennsylvania Department of Environmental Resources, Bureau of Abandoned Mine Reclamation, P.O. Box 1467, Harrisburg, Pennsylvania 17105, telephone: (717) 783–2156

A public hearing, if held, will be at the Penn Harris Motor Inn and Convention Center at the Camp Hill Bypass and U.S. Routes 11 and 15, Camp Hill, Pennsylvania.

FOR FURTHER INFORMATION CONTACT: Robert J. Biggi, Director, Harrisburg Field Office, (717) 782–4036.

SUPPLEMENTARY INFORMATION:

I. Background on the Pennsylvania Program

The Secretary of the Interior approved the Pennsylvania plan effective July 31, 1982. Information on the background of the Pennsylvania plan including the Secretary's findings, and the disposition of comments can be found in the July 30, 1982, **Federal Register** (47 FR 33079). Effective October 30, 1992, the Pennsylvania Plan was amended to update existing policies and procedures, and to allow for the new initiatives provided under the Abandoned Mine Reclamation Act of 1990 (Public Law 101–508). The Secretary's findings and the disposition of comments relative to the Plan amendment can be found in the October 30, 1992 **Federal Register** (57 FR 49135–49138).

II. Discussion of the Proposed Amendment

By notice dated September 29, 1982 (47 FR 42729–42730), the Secretary extended an opportunity to the States and Tribes to amend their AML Reclamation Plans to allow for a self-administered emergency reclamation program. Until that time, projects declared in emergency pursuant to section 410 of the SMCRA had been administered solely by OSM. To ensure that State/Tribal reclamation plan amendments submitted in response to the notice were consistent and adequately addressed necessary program requirements, OSM established guidelines on March 7, 1983. These guidelines for submission of amendments to State reclamation plans to conduct emergency reclamation contain specific authorizations, policies, and procedures that should be addressed as part of the amendment request. In addition, the March 7, 1983 guidance also contains information on the administration of State emergency reclamation programs.

By letter dated December 30, 1992, the Pennsylvania Department of Environmental Resources (PADER) submitted to OSM a proposed amendment to revise the Pennsylvania Plan to assume responsibility for a State administered emergency reclamation program. The amendment, as submitted, proposes to add a new part F to the current Pennsylvania Plan. Part F is composed of six sections that address AML Reclamation Plan amendment requirements under 30 CFR 884.13. The following is a summary of each section under the new part F:

1. *Governor's Designation of the Department of Environmental Resources:* This section addressed the designation by the Governor of Pennsylvania that PADER is authorized to conduct the reclamation program.

2. *The Legal Opinion Authorizing PADER to Administer the Emergency Program*: PADER has submitted a revised legal opinion from the Assistant Counsel of the Bureau of Legal Services concerning its authorities for conducting an emergency program.

3. *Policies and Procedures in Conducting the Emergency Program*: This section of the amendment contains a discussion of the purpose of the emergency program, coordination activities with other State and Federal agencies, and procedures for entering onto private property and conducting lien evaluations. In addition, this

section addresses the planning and design of emergency projects, the determination of site eligibility, and the participation of the public in the development of the amendment.

4. *Administrative and Managerial Structure for the Emergency Program*: This section of the amendment provides information on the structure and staffing of the emergency program, assistance to be provided by OSM during the period of transition from a Federal to a State administered program, and on the overall funding of the Pennsylvania emergency program. In addition, this section discusses the procurement and accounting systems to be used for emergency projects.

5. *Emergency Problem Quantification*: This section provides information on the types of emergencies and where they may occur in the State.

6. *Emergency Program in Pennsylvania*: This section provides a statement on the objectives of the overall reclamation program and the emergency program in Pennsylvania.

III. Public Comment Procedures

In accordance with the provisions of 30 CFR 884.14, OSM is now seeking comments on whether the amendment proposed by Pennsylvania satisfies the applicable plan approval criteria of 30 CFR 884.13. If the amendment is deemed adequate, it will become part of the Pennsylvania Plan.

Written Comments

Written comments should be specific, pertain only to the issues proposed in this rulemaking, and include explanations in support of the commenter's recommendations. Comments received after the time indicated under "DATES" or at locations other than the Harrisburg Field Office will not necessarily be considered in the final rulemaking or included in the Administrative Record.

Public Hearing

Persons wishing to comment at the public hearing should contact the person listed under "FOR FURTHER INFORMATION CONTACT" by 4 p.m. on April 7, 1993. If no one requests an opportunity to comment at a public hearing, the hearing will not be held.

Filing of a written statement at the time of the hearing is requested as it will greatly assist the transcriber. Submission of written statements in advance of the hearing will allow OSM officials to prepare adequate responses and appropriate questions.

The public hearing will continue on the specific date until all persons scheduled to comment have been heard. Persons in the audience who have not been scheduled to comment, and who wish to do so, will be heard following those scheduled. The hearing will end after all persons scheduled to comment and persons present in the audience who wish to comment have been heard.

Public Meeting

If only one person requests an opportunity to comment at a hearing, a public meeting, rather than a public hearing, may be held.

Persons wishing to meet with OSM representatives to discuss the proposed amendments may request a meeting at the Harrisburg Field Office by contacting the person listed under "FOR FURTHER INFORMATION CONTACT." All such meetings will be open to the public and, if possible, notices of meetings will be posted at the locations listed under "ADDRESSES." A written summary of each meeting will be made part of the Administrative Record.

IV. Procedural Determinations

Executive Order 12291

On March 30, 1992, the Office of Management and Budget (OMB) granted the Office of Surface Mining Reclamation and Enforcement (OSM) an exemption from sections 3, 4, 7 and 8 of Executive Order 12291 for actions related to approval or disapproval of State and Tribal abandoned mine land reclamation plans and revisions thereof. Therefore, preparation of a regulatory impact analysis is not necessary and OMB regulatory review is not required.

Executive Order 12778

The Department of the Interior has conducted the reviews required by section 2 of Executive Order 12778 and has determined that, to the extent allowed by law, this rule meets the applicable standards of subsections (a) and (b) of that section. However, these standards are not applicable to the actual language of State and Tribal abandoned mine land reclamation plans and revisions thereof since each such plan is drafted and adopted by a specific State or Tribe, not by OSM. Decisions on proposed State and Tribal abandoned mine land reclamation plans and revisions thereof submitted by a State or Tribe are based on a determination of whether the submittal meets the requirements of title IV of the Surface Mining Control and Reclamation Act (SMCRA) (30 U.S.C. 1231–1243) and the Federal regulations at 30 CFR parts 884 and 888.

National Environmental Policy Act

No environmental impact statement is required for this rule since agency decisions on proposed State and Tribal abandoned mine land reclamation plans and revisions thereof are categorically excluded from compliance with the National Environmental Policy Act (42 U.S.C. 4332) by the Manual of the Department of the Interior [516 DM 6, appendix 8, paragraph 8.4B(29)].

Paperwork Reduction Act

This rule does not contain information collection requirements that require approval by the Office of Management and Budget under the Paperwork Reduction Act, 44 U.S.C. 3507 *et seq.*

Regulatory Flexibility Act

The Department of the Interior has determined that this rule will not have a significant economic impact on a substantial number of small entities under the Regulatory Flexibility Act (5 U.S.C. 601 *et seq.*). The State [or Tribal] submittal which is the subject of this rule is based upon Federal regulations for which an economic analysis was prepared and certification made that such regulations would not have a significant economic effect upon a substantial number of small entities. Hence, this rule will ensure that existing requirements established by SMCRA or previously promulgated by OSM will be implemented by the State [or Tribe]. In making the determination as to whether this rule would have a significant economic impact, the Department relied upon the data and assumptions in the analyses for the corresponding Federal regulations.

List of Subjects in 30 CFR Part 938

Intergovernmental relations, Surface mining, Underground mining.

Dated: January 15, 1993.

W. Hord Tipton,

Deputy Director, Operations and Technical Service.

[FR Doc. 93–1863 Filed 3–22–93; 8:45 am]

BILLING CODE 4310–05–M

ENVIRONMENTAL PROTECTION AGENCY

40 CFR Part 61

[AD–FRL–4607–5]

National Emission Standards for Hazardous Air Pollutants, Benzene Waste Operations

AGENCY: Environmental Protection Agency (EPA).

ACTION: Advance notice of proposed rulemaking (ANPR).

SUMMARY: The EPA is requesting comment on possible future rulemaking to propose an alternative compliance option to the national emission standards for hazardous air pollutants (NESHAP) for benzene waste operations. Sources affected by this NESHAP include chemical manufacturing plants, coke by-product recovery plants, petroleum refineries, and facilities at which waste management units are used to treat, store, or dispose of waste generated by chemical manufacturing plants, coke by-product recovery plants, or petroleum refineries. The alternative compliance option would be based on site-specific risk assessment. If the EPA decides to pursue such a rulemaking, it would further delineate the scope and rationale as well as solicit additional comments at the time of proposal. This ANPR, and any related rulemaking that may follow, do not affect the date by which facilities are required to comply with the NESHAP for benzene waste operations. The EPA may decide not to pursue additional rulemaking. Consequently, facilities must document compliance, as described in the preamble for the amendments to the NESHAP for benzene waste operations published in the **Federal Register** of January 7, 1993.

DATES: Comments. Comments concerning this ANPR must be received by the EPA on or before April 22, 1993.

ADDRESSES: Comments. Comments should be submitted (in duplicate if possible) to Air Docket section (LE-131), Attention, Docket A-92-58, U.S. Environmental Protection Agency, 401 M Street SW., Washington, DC 20460. Please also send a copy of the comments to Ms. Gail Lacy at the address below.

FOR FURTHER INFORMATION CONTACT: Gail K. Lacy, Office of Air Quality Planning and Standards, Standards Development Branch (MD-13), U.S. Environmental Protection Agency, Research Triangle Park, North Carolina 27711, telephone (919) 541-5261.

SUPPLEMENTARY INFORMATION:

I. Background

On March 7, 1990 (55 FR 8292), the EPA promulgated under section 112 of the Clean Air Act (Act), 42 U.S.C. 7412, the NESHAP to control emissions of benzene to ambient air from waste operations (subpart FF of 40 CFR part 61). Sources affected by subpart FF include chemical manufacturing plants, coke by-product recovery plants, petroleum refineries, and facilities at which waste management units are used to treat, store, or dispose of waste generated by chemical manufacturing plants, coke by-product recovery plants, or petroleum refineries.

Subsequent to promulgation, the EPA stayed the effectiveness of subpart FF (57 FR 8012, March 5, 1992), and proposed clarifying amendments to subpart FF (57 FR 8017, March 5, 1992). The EPA Administrator signed final clarifying amendments, which also removed the stay, December 1, 1992, the date specified in the settlement agreement filed in connection with litigation on subpart FF. See *American Petroleum Institute* v. *EPA*, No. 90-1238 (D.C. Circuit) (Settlement Agreement). The final amendments were published in the **Federal Register** on January 7, 1993 (58 FR 3072).

In the preamble to the proposed clarifying amendments (57 FR 8022), the EPA solicited suggestions and supporting information for alternative structures for the rule that would encourage reclamation and recycling without compromising the NESHAP risk protection goals (which are described later in this notice). Several commenters from the affected industry suggested that the EPA consider site-specific risk assessment as an alternative rule structure. They believe that, in some cases, the use of site-specific information in the risk modeling may result in estimated health risks that meet the EPA's NESHAP policy goals without implementing the full range of controls required by the NESHAP as promulgated.

Site-specific risk assessment was not included as an alternative structure in the final clarifying amendments for the following reasons. First, development of this alternative compliance option was not feasible under the time frame for signature of the final amendments of December 1, 1992. Second, the EPA specifically stated in the proposed rulemaking of March 5, 1992, that it was not soliciting suggestions for structures based on site-specific control or risk protection. The original benzene waste operations NESHAP, as well as other NESHAP regulating benzene from other source categories, was developed as a uniform national standard, under which all facilities are required to apply a certain level of control. Site-specific standards would be a departure from this policy. However, because some in the affected industry are strongly interested in site-specific risk assessment for this NESHAP, the EPA agreed to request public comment on such an option.

II. Authority and Applicability

The authority for the promulgation of the subpart FF NESHAP for benzene waste operations is section 112 of the Act prior to its amendment by the Clean Air Act as amended (the 1990 Amendments). Similarly, if a rulemaking is pursued, the EPA would propose the alternative compliance option being discussed today under the authority of the Act prior to the 1990 Amendments.

In subpart FF, facility applicability of the control requirements is based on the facility's total annual benzene quantity (TAB) in all aqueous waste streams, as determined under § 61.342(a) of the rule. At facilities with a TAB of less than 10 megagrams per year (Mg/yr), only the recordkeeping and reporting requirements of subpart FF apply. Facilities with a TAB of 10 Mg/yr or greater must manage and treat the facility wastes in accordance with the standards provided by the rule. The alternative compliance option would provide an additional way to comply with the control requirements of the rule. It would have no affect on facilities with a TAB of less than 10 Mg/yr.

An alternative compliance option based on site-specific risk considerations could be structured such that the emissions limitation at the facility would be determined by, or made conditional on, the ability of the owner or operator to remain below a target risk level. The site-specific risk alternative could be based on the health risks associated only with emissions from the emission sources affected by subpart FF (i.e., benzene waste operations). This scope would be consistent with the analysis underlying subpart FF, in which the emissions and risk from only the source category of waste operations (not the entire facility) were examined.

III. NESHAP Policy

The EPA's NESHAP policy for the protection of public health with an ample margin of safety, as implemented under section 112 before the 1990 Amendments, was used to set the original standard for the benzene waste operations source category (54 FR 38044, September 14, 1989). In protecting public health with an ample margin of safety under section 112, the EPA strives to provide maximum feasible protection against risks to health from hazardous air pollutants by: (1) Protecting the greatest number of persons possible to an individual lifetime risk level no higher than approximately 1 in 1 million and (2) limiting to no higher than approximately 1 in 10 thousand the estimated risk that a person living near a plant would have if he or she were exposed to the maximum pollutant concentrations for 70 years, called

maximum individual risk (MIR). The MIR is the estimated risk of contracting cancer following a lifetime of exposure at the maximum, modeled long-term ambient concentration of a pollutant.

Implementation of the policy goals is by means of a two-step, standard-setting approach, with an analytical first step to determine an "acceptable risk" that considers all health information, including uncertainties associated with the risk estimates, the estimated increased annual cancer incidence, and incorporates a presumptive limit on the MIR of approximately 1 in 10 thousand (1×10^{-4}). A second step follows in which the actual standard is set at a level that provides "an ample margin of safety." The second step includes consideration of all health information, including the number of persons at risk levels higher than approximately 1 in 1 million (1×10^{-6}), as well as other relevant factors including costs and economic impacts, and technological feasibility. A level that provides an ample margin of safety, as determined by the EPA, cannot be less stringent than the level that was judged to represent an acceptable risk in the first step.

An alternative compliance option based on site-specific risk assessment would need to provide an ample margin of safety consistent with the NESHAP policy.

IV. Factors in Risk Assessment and Industry's Suggested Approach

A. Parameter Targets

The members of industry who originally requested the site-specific risk compliance alternative submitted a plan specifically for the benzene waste operations NESHAP that they believe would achieve all of the risk goals of the EPA NESHAP policy. Their plan (included in full in Docket A-92-58) is based on examination of only one measure of risk, the individual lifetime risk to the most exposed person, with a target level not to be exceeded of 1 in 1 million (1×10^{-6}). In their plan, the maximum risk would be based on the most exposed person actually living near the facility. (This is different from the calculation of the MIR for the source category used in developing the NESHAP, which examined the risk at an assumed facility boundary.) Other exposure assumptions in the industry's plan include that the most exposed person would be assumed to be exposed continuously for a lifetime of 70 years to the estimated outdoor concentration of benzene from waste operations.

The EPA requests comments on this approach or other approaches that a commenter believes would satisfy the NESHAP risk policy. For example, do other parameters, such as incidence, cost and economic impact, need to be considered on a site-by-site basis when all members of the exposed population are at a risk level of 1×10^{-6} or less? In addition, the EPA would like comments on the focus on the most exposed person in the industry's approach, instead of the facility's boundary.

To ensure the protection goals are met and the NESHAP is implemented uniformly across the affected industry, the EPA believes that a rulemaking for a site-specific risk alternative compliance option, if pursued, would need to establish uniform guidelines or regulations for the site-specific inputs and the methodology for the risk analysis.

B. Benzene Emissions

A key component in the risk assessment that the EPA would particularly like comments on is the estimation of benzene emissions. For site-specific risk assessment, the goal would be to estimate the emissions from the specific facility, including the magnitude of benzene emissions, the nature of the release (e.g., temperature, flow rate) and the location of the release. There are many difficulties associated with estimating benzene emissions from a specific facility. One is that most affected facilities have a large number of waste streams and waste management units. A determination would have to be made as to whether to estimate emissions and dispersion from each unit separately or to group them in some manner. There is also variability in the magnitude of the waste streams and the benzene concentration. Some streams are generated occasionally, but with no particular schedule. Furthermore, there are many factors that affect the amount emitted, including wind and the configuration of the unit.

Several different approaches could be used to estimate benzene emissions; each presents its own problems. Four described below involve the use of the national emission factors developed by the EPA. A fifth discussed below is to allow a facility to test emissions from waste management units. These approaches span a range of possibilities. The EPA is requesting comments on these approaches or other approaches.

The EPA has developed emission factors that are representative of the industry average for the purpose of developing national standards. For each type of waste management unit, there is a "fraction emitted" factor, i.e., the fraction of benzene in a waste that is estimated to be emitted when it is managed in that unit. For typical sequences of waste management units ("waste management trains"), the EPA has developed overall fractions emitted based on model scenarios. With the overall fraction emitted estimates, one can estimate the amount of benzene emitted from the whole management train based on the amount of benzene in the waste at its point of generation. There are three different control scenarios for the EPA's overall fraction emitted estimates: all units in the train are uncontrolled for benzene air emissions; all units are uncontrolled except for the separator, which has a cover; and all units are fully controlled according to the NESHAP requirements.

One of the approaches for using the emission factors is to allow each facility to use the emission factor for each waste management unit and then to model the emission units separately, rather than to use an overall fraction emitted for the train. Some of the difficulties with this approach are that, to correctly calculate the mass of benzene emitted, it is necessary to have a good estimate of the amount of benzene in the waste in the unit. As noted above, this may vary significantly as different waste streams are managed in the unit. This method could become very cumbersome with the number of different waste streams and management units. For example, there may be hundreds of streams and waste management units.

Another potential problem is that some of the air pollution controls suppress emissions, keeping the benzene in the waste. Therefore, the waste has the same emission potential until it is treated to remove or destroy the benzene. It is important that the whole waste management train be considered so that credit is not inappropriately given for emission reductions when the emissions are really emitted at another unit in the waste management sequence.

The other three approaches involving the EPA's factors use the overall fractions emitted for a waste management train and then estimate the emissions for each waste stream managed in that train. This could be less cumbersome than modelling each unit individually as described in the previous paragraph. One of the three approaches is for a facility to use the EPA's overall fraction emitted based on nationally representative model trains. However, particular facilities may have very different configurations or numbers of waste management units than the models on which the EPA's estimates were based.

Another approach is to develop new overall fraction emitted factors for

additional representatives scenarios. For example, the industry included a new overall fraction emitted in their risk assessment plan. This approach may require more data collection or analysis.

The third approach would be to allow a facility to use the EPA's waste management unit emission factors along with site-specific information on the waste management train and develop a more site-specific overall fraction emitted for the train. If the train or some units in it are only partially controlled, it may be necessary to assume that the whole train is uncontrolled. The reason is that it would be very difficult to make sure that the emissions from interrelated units are not underestimated. An example is a wastewater system where an uncontrolled sewer leg and a controlled sewer leg meet in a controlled junction box. Unless the junction box were fully controlled, including a mechanism (such as a water seal) to prevent flow of gases back into the uncontrolled sewer leg, benzene in the waste in the controlled sewer leg could escape into the uncontrolled sewer leg.

All of the approaches using an overall fraction emitted for a waste management train pose the problem of determining the other parameters needed for modeling emissions from the train, such as physical location of the emissions (because a waste management train may span a large area), and the characteristics of the emissions, such as flow and stack height.

The last approach for estimating emissions is to allow facilities to test their own emissions. In theory, the development of site-specific emission factors is reasonable and desirable. However, in the case of many waste management units, such as units in a wastewater treatment system, the measurement of emissions is very difficult. The emissions are fugitive by nature; therefore, it is difficult to get a representative measurement. The units may be open area sources whose emissions are greatly dependent on ambient effects, such as wind. Furthermore, the systems tend to be quite complex, with interdependent components (e.g., many drains and junction boxes). In addition, there is the previously mentioned problem of variability in the waste streams, both in magnitude and benzene concentration. Therefore, the development of site-specific emission estimates and their review by the EPA or delegated State or local agency would be costly and burdensome.

C. Dispersion and Exposure

Other types of guidelines or requirements to be established include how the dispersion modeling is to be performed (e.g., characterization of the emission points, their location, and the site's meteorological conditions), and how the exposure assessment is to be performed (e.g., how to locate the most exposed individual, what period of exposure should be assumed, and how to link the dispersion results to the exposed population around the plant). In developing the guidance or requirements, the EPA would have to determine for which parameters the industry would be allowed to use site-specific information and estimates (e.g., meteorology input based on data collected by the facility), and what analytical methods and amount of documentation the enforcement agency would need to evaluate the facility's risk assessment.

The industry's site-specific risk plan included a tiered risk analysis protocol similar to that described in the EPA's document entitled "A Tiered Modeling Approach for Assessing the Risks due to Sources of Hazardous Air Pollutants" (EPA–450/4–92–001, March 1992). Additional information on both the EPA's and the industry's tiered approach to risk analysis can be found in the rulemaking docket. Essentially, a tiered approach would provide the opportunity for a facility to show it meets the risk target using a very conservative screening analysis, which would require fewer site-specific inputs or data than an actual rigorous site-specific risk assessment would require. If the screening analysis indicates that the risk using conservative assumptions is not lower than the target, the facility owner or operator would then be able to perform a more comprehensive site-specific risk assessment using detailed site-specific inputs to EPA-approved dispersion models. Both the industry's and the EPA's approaches include details on methodology for the comprehensive modeling. The EPA would like comments on these details. The EPA would also like comments on the need for the screening analysis (i.e., the first tier). The first tier, by nature, should be conservative to ensure that no high risk facilities have results from the first tier analysis that are below the target. However, if the first tier is so conservative that almost all facilities would need to do the comprehensive site-specific risk modeling, then the first tier may not be useful.

V. Enforcement and Implementation

If this compliance alternative based on site-specific risk were proposed, the EPA would also address how a compliance approach would be implemented and enforced. One possible approach that could be considered is to develop an emission limitation from the risk analysis that will ensure that the risk goals are met, and then to focus on ways to verify that the emission limitation is met on a continuing basis. Other considerations include whether the inputs into the risk analysis become enforceable requirements in and of themselves, whether a new risk analysis would be required if the values of these inputs change, and whether these parameters (and perhaps others) should be monitored to ensure continued compliance. Any alternative compliance option based on site-specific risk must ensure that the facility continues to meet the risk protection goals of the NESHAP. Consequently, records would be required to document all inputs used in the assessment and the details of the analytical methods.

The industry plan included provisions for annual certification and recordkeeping that would be used in the implementation of this alternative compliance option. Under their plan, the Administrator may request that the owner or operator provide a certification of the site-specific risk assessment and/or provide for an annual review by an independent contractor. Records would be kept for input parameters used in the analysis, including the results of measurements and calculations, as well as documentation of the analytical methods that were used. Records associated with each affected waste management unit would be maintained to provide the basic information needed to evaluate compliance, such as the type of unit, air emission controls, type of waste, waste quantity, benzene concentration, and annual benzene emissions.

Under section 112(d) of the Act, the EPA may authorize qualified States to administer and enforce the NESHAP program within the State. Therefore, this alternative compliance option could be carried out by the delegated State or local agency. If the NESHAP for benzene waste operations has not been delegated to the State, the alternative would be implemented by the EPA regional office.

VI. Compliance Deadline and Requirements for Waiver Applicants Awaiting Development of a Site-Specific Risk Assessment Compliance Option

The compliance deadline and special requirements for waiver applicants awaiting development of an alternative compliance option based on site-specific risk assessment are summarized below. The EPA policy related to granting compliance waivers under an alternative compliance option was presented in section VIII (C) of the preamble to the final rule amendments (58 FR 3091, January 7, 1993). The EPA is not soliciting comments on the compliance deadline or the waiver policy as a part of this notice.

Facilities will have 90 days from January 7, 1993, the effective date of the final rule amendments, in which to comply with all provisions of the rule. Any facility unable to comply with the rule as amended on January 7, 1993, within the 90-day period (i.e., by April 7, 1993) is eligible to apply for a waiver of compliance for a maximum period of up to 2 years beyond January 7, 1993, following the procedures described in the General Provisions to 40 CFR part 61, § 61.10.

Owners or operators who are not meeting the provisions of subpart FF by April 7, 1993, and are considering use of the site-specific risk alternative compliance option, if it becomes available, must apply for waivers of compliance. Facilities that would use the alternative compliance option if EPA proceeds with such an option are not allowed additional time beyond the waiver period. As prescribed in section 112 of the Act, once the maximum 2-year waiver period expires on January 7, 1995, the EPA requires that the source be in compliance with subpart FF, regardless of whether or not the alternative compliance option has been incorporated into subpart FF.

Mitigation goals and credits under the waiver policy must be calculated based on a plan to comply with subpart FF, as amended, and not based on using the possible alternative compliance option discussed above.

The details of this policy are discussed in the preamble to the amendments to subpart FF (58 FR 3091).

Waiver applications by facility owners or operators awaiting the development of an additional compliance option based on site-specific risk assessment should reflect a two-phase compliance path. The first phase would outline how compliance will be achieved with a site-specific risk assessment-based compliance option. In the first phase of the waiver application, the applicant shall demonstrate how, and on what schedule, compliance under this option, should it become available, would be expeditiously achieved. This phase of the compliance path would not have to show installation of control equipment necessary for compliance with §§ 61.343 through 61.349 of subpart FF, if that control equipment would not be required under a compliance option based on site-specific risk assessment.

The second phase of the compliance plan shall document how the applicant will comply with §§ 61.343 through 61.349 of subpart FF, as amended on January 7, 1993 (58 FR 3072). This compliance path would then be implemented by the applicant if the EPA decides not to proceed with the alternative compliance option based on site-specific risk assessment.

Finally, as noted earlier, applicants awaiting development of an additional alternative compliance option for subpart FF should recognize that they will not receive additional time beyond the waiver period for compliance, and that the waiver period shall not extend more than 2 years beyond January 7, 1993.

The waiver policy is further discussed in a guidance document prepared by the EPA, "Benzene Waste Operations NESHAP—Waiver Guidance Document" (EPA-453/R-93-010). This document will facilitate the application and review process for waivers of compliance for the benzene waste operations NESHAP.

VII. Request for Comments

The EPA is soliciting public comments on this advance notice of proposed rulemaking. The EPA is especially interested in receiving information related to: (1) The legal authority for implementing an alternative compliance option based on site-specific risk; (2) how such an option could fulfill the goals of the NESHAP policy; (3) the methodology for the risk assessment, including estimating emissions, dispersion and exposure; and (4) the enforcement and implementation aspects of the alternative compliance option.

List of Subjects in 40 CFR Part 61

Air pollution control, Arsenic, Asbestos, Benzene, Beryllium, Coke oven emission, Hazardous substances, Intergovernmental relations, Mercury, Radionuclides, Reporting and recordkeeping requirements, Vinyl chloride, Volatile hazardous air pollutants.

Dated: March 16, 1993.

Michael Shapiro,

Acting Assistant Administrator, Office of Air and Radiation.

[FR Doc. 93-6601 Filed 3-22-93; 8:45 am]

BILLING CODE 6560-50-P

FEDERAL COMMUNICATIONS COMMISSION

47 CFR Chapter I

[CC Docket No. 92-166; DA 93-295]

MSS Above 1 GHz Negotiated Rulemaking Committee

AGENCY: Federal Communications Commission.

ACTION: Notice of cancellation of public meetings.

SUMMARY: In accordance with the Federal Advisory Committee Act, this notice advises interested persons that the meetings of the MSS Above 1 GHz Negotiated Rulemaking Committee ("Committee") scheduled for Tuesday, March 18, 1993 and Wednesday, March 24, 1993 have been cancelled. These meetings were announced in Public Notices, DA 93-163 (58 FR 8927 (February 18, 1993)) and DA 93-252 (58 FR 13041 (March 9, 1993)), respectively.

FOR FURTHER INFORMATION CONTACT: Kathleen Campbell, Administrative Assistant to the Committee, at (202) 634-1952.

SUPPLEMENTARY INFORMATION: Subsequent Full Committee meetings are currently scheduled for Thursday March 25; Tuesday, March 30; Wednesday, March 31, Friday, April 2; and Monday, April 5.

Federal Communications Commission.

Donna R. Searcy,

Secretary.

[FR Doc. 93-6539 Filed 3-22-93; 8:45 am]

BILLING CODE 6712-01-M

---

47 CFR Part 73

[MM Docket No. 93-45, RM-8186]

Radio Broadcasting Services; Kealakekua, HI

AGENCY: Federal Communications Commission.

ACTION: Proposed rule.

SUMMARY: This document requests comments on a petition by Visionary Related Entertainment, Inc., requesting the substitution of Channel 268C1 for Channel 268C3 at Kealakekua, Hawaii, and the modification of Station KAOY(FM)'s construction permit to

specify operation on Channel 268C1. The proposed coordinates for Channel 268C1 at Kealakekua are North Latitude 19–42–56 and West Longitude 155–55–00.

DATES: Comments must be filed on or before May 7, 1993, and reply comments on or before May 24, 1993.

ADDRESSES: Federal Communications Commission, Washington, DC 20554. In addition to filing comments with the FCC, interested parties should serve the petitioner, or its counsel or consultant, as follows: Peter A. Casciato, 1500 Sansome Street, Suite 201, San Francisco, CA 94111 (Attorney for petitioner).

FOR FURTHER INFORMATION CONTACT: Nancy J. Walls, Mass Media Bureau, (202) 634–6530.

SUPPLEMENTARY INFORMATION: This is a synopsis of the Commission's Notice of Proposed Rule Making, MM Docket No. 93–45, adopted February 22, 1993, and released March 17, 1993. The full text of this Commission decision is available for inspection and copying during normal business hours in the FCC Dockets Branch (Room 230), 1919 M Street, NW., Washington, DC. The complete text of this decision may also be purchased from the Commission's copy contractors, International Transcription Service, Inc. (202) 857–3800, 1919 M Street, NW., room 246, or 2100 M Street, NW., suite 140, Washington, DC 20037.

Provisions of the Regulatory Flexibility Act of 1980 do not apply to this proceeding.

Members of the public should note that from the time a Notice of Proposed Rule Making is issued until the matter is no longer subject to Commission consideration or court review, all *ex parte* contracts are prohibited in Commission proceedings, such as this one, which involve channel allotments. See 47 CFR 1.1204(b) for rules governing permissible *ex parte* contacts.

For information regarding proper filing procedures for comments, see 47 CFR 1.415 and 1.420.

List of Subjects in 47 CFR Part 73

Radio broadcasting.

Federal Communications Commission.

Michael C. Ruger,

Chief, Allocations Branch, Policy and Rules Division, Mass Media Bureau.

[FR Doc. 93–6540 Filed 3–22–93; 8:45 am]

BILLING CODE 6712–01–M

47 CFR Part 73

[MM Docket No. 93–46, RM–8187]

Radio Broadcasting Services; American Falls, ID

AGENCY: Federal Communications Commission.

ACTION: Proposed rule.

SUMMARY: This document requests comments on a petition by Dobson, Goss, Rones & Dahl, requesting the substitution of Channel 281C1 for Channel 281A at American Falls, Idaho, and the modification of Station KOUU (FM)'s construction permit to specify operation on Channel 281C1. The proposed coordinates for Channel 281C1 at American Falls are North Latitude 42°45′24″ and West Longitude 112°48′38″.

DATES: Comments must be filed on or before May 7, 1993, and reply comments on or before May 24, 1993.

ADDRESSES: Federal Communications Commission, Washington, DC 20554. In addition to filing comments with the FCC, interested parties should serve the petitioner, or its counsel or consultant, as follows: Jerome J. Dobson, Dobson, Goss, Rones & Dahl, 7121 Maryland, St. Louis, MO 63130 (petitioner).

FOR FURTHER INFORMATION CONTACT: Nancy J. Walls, Mass Media Bureau, (202) 634–6530.

SUPPLEMENTARY INFORMATION: This is a synopsis of the Commission's Notice of Proposed Rule Making, MM Docket No. 93–46, adopted February 22, 1993, and released March 17, 1993. The full text of this Commission decision is available for inspection and copying during normal business hours in the FCC Dockets Branch (Room 230), 1919 M Street, NW., Washington, DC. The complete text of this decision may also be purchased from the Commission's copy contractors, International Transcription Service, Inc., (202) 857–3800, 1919 M Street, NW., room 246, or 2100 M Street, NW., suite 140, Washington, DC 20037.

Provisions of the Regulatory Flexibility Act of 1980 do not apply to this proceeding.

Members of the public should note that from the time a Notice of Proposed Rule Making is issued until the matter is no longer subject to Commission consideration or court review, all *ex parte* contacts are prohibited in Commission proceedings, such as this one, which involve channel allotments. See 47 CFR 1.1204(b) for rules governing permissible *ex parte* contacts.

For information regarding proper filing procedures for comments, see 47 CFR 1.415 and 1.420.

List of Subjects in 47 CFR Part 73

Radio broadcasting.

Federal Communications Commission.

Michael C. Ruger,

Chief, Allocations Branch, Policy and Rules Division, Mass Media Bureau.

[FR Doc. 93–6541 Filed 3–22–93; 8:45 am]

BILLING CODE 6712–01–M

47 CFR Part 73

[MM Docket No. 93–28, RM–8172]

Radio Broadcasting Services; Colonial Heights, TN

AGENCY: Federal Communications Commission.

ACTION: Proposed rule.

SUMMARY: The Commission requests comments on a petition filed by Murray Communications, permittee of Channel 290A, Colonial Heights, Tennessee, proposing the substitution of Channel 290C3 for Channel 290A at Colonial Heights and modification of Murray's authorization to specify operation in the higher powered channel. Channel 290C3 can be allotted to Colonial Heights in compliance with the Commission's minimum distance separation requirements with a site restriction 16.7 kilometers (10.4 miles) southwest to accommodate Murray's desired site. The coordinates for Channel 290C3 are 36–21–11 and 82–35–24. In accordance with § 1.420(g) of the Commission's Rules, we will not accept competing expressions of interest for use of Channel 290C3 at Colonial Heights or require petitioner to demonstrate the availability of an additional equivalent class channel for use by such parties.

DATES: Comments must be filed on or before May 7, 1993, and reply comments on or before May 24, 1993.

ADDRESSES: Federal Communications Commission, Washington, DC 20554. In addition to filing comments with the FCC, interested parties should serve the petitioner, or its counsel or consultant, as follows: Timothy K. Brady, Esq. P.O. Box 986, Brentwood, Tennessee 37027–0986 (Counsel for petitioner).

FOR FURTHER INFORMATION CONTACT: Pamela Blumenthal, Mass Media Bureau, (202) 634–6530.

SUPPLEMENTARY INFORMATION: This is a synopsis of the Commission's Notice of Proposed Rule Making, MM Docket No. 93–28, adopted February 16, 1993, and released March 17, 1993. The full text of this Commission decision is available for inspection and copying during normal business hours in the FCC

Dockets Branch (Room 230), 1919 M Street, NW, Washington, DC. The complete text of this decision may also be purchased from the Commission's copy contractor, ITS, Inc., (202) 857-3800, 2100 M Street, NW, Suite 140, Washington, DC 20037.

Provisions of the Regulatory Flexibility Act of 1980 do not apply to this proceeding.

Members of the public should note that from the time a Notice of Proposed Rule Making is issued until the matter is no longer subject to Commission consideration or court review, all *ex parte* contacts are prohibited in Commission proceedings, such as this one, which involve channel allotments. See 47 CFR 1.1204(b) for rules governing permissible *ex parte* contacts.

For information regarding proper filing procedures for comments, see 47 CFR 1.415 and 1.420.

List of Subjects in 47 CFR Part 73

Radio broadcasting.

Federal Communications Commission.

Michael C. Ruger,

Chief, Allocations Branch, Policy and Rules Division, Mass Media Bureau.

[FR Doc. 93-6542 Filed 3-22-93; 8:45 am]

BILLING CODE 6712-01-M

DEPARTMENT OF TRANSPORTATION

National Highway Traffic Safety Administration

49 CFR Part 571

[Docket No. 93-02; Notice 2]

Federal Motor Vehicle Safety Standards; Compressed Natural Gas Fuel System and Fuel Tank Integrity

AGENCY: National Highway Traffic Safety Administration (NHTSA), DOT.

ACTION: Notice of proposed rulemaking; notice to extend comment period.

SUMMARY: In response to petitions submitted by the American Gas Association, the National Gas Vehicle Coalition, the Compressed Gas Association, and the American Automobile Manufacturers Association, this notice extends the comment period for a proposal to establish a new Federal Motor Vehicle Safety Standard (FMVSS) for compressed natural gas (CNG) fuel tanks and vehicles using CNG as a fuel. NHTSA believes that commenters need more time to formulate their responses given the complexity of the issues and the need for the associations to consult with their members. Accordingly, the agency has decided to extend the comment period from March 22, 1993 to May 6, 1993.

DATES: Comments on the notice of proposed rulemaking, Docket 93-02, Notice 1, must be received on or before May 6, 1993.

ADDRESSES: Comments should refer to Docket No. 93-02, Notice 1 and be submitted to: Docket Section, NHTSA, 400 Seventh Street SW., Washington, DC 20590. Docket hours are 9:30 a.m. to 4 p.m. Monday through Friday.

FOR FURTHER INFORMATION CONTACT: Mr. Gary Woodford, Office of Rulemaking, NHTSA, 400 Seventh Street, SW., Washington, DC 20590 (202-366-4931).

SUPPLEMENTARY INFORMATION: On January 21, 1993, NHTSA published a notice of proposed rulemaking (NPRM) in the **Federal Register** proposing to establish a new Federal Motor Vehicle Safety Standard (FMVSS) specifying performance requirements for compressed natural gas (CNG) fuel tanks and vehicles using CNG as a fuel. The notice requested comments on the proposed standard and on whether to apply the proposed requirements to other vehicles designed to be powered by a gaseous fuel, such as liquefied petroleum gas. The notice specified that comments had to be submitted on or before March 22, 1993.

The American Gas Association (AGA), the National Gas Vehicle Coalition (NGVC), the Compressed Gas Association (CGA), and the American Automobile Manufacturers Association (AAMA) petitioned the agency to extend the comment period an additional 60 days. AGA and the NGVC stated that they needed additional time to coordinate their response with their member companies. They stated that their comments would add greatly to the formulation of an acceptable rule because they represent the majority of companies involved in building and servicing natural gas vehicles. Similarly, CGA and AAMA needed more time to coordinate their response with their members about this complex rulemaking.

After reviewing the petitions, NHTSA agrees with the petitioners that extending the comment closing date is desirable given that the proposal to promulgate a new safety standard for CNG vehicles raises a variety of complex issues. In addition, the agency believes that these associations need more time to consult with their members. An extension of the comment period will therefore allow the petitioners and other commenters more time to better address the issues covered in the NPRM. However, the agency believes that the extension should only be for 45 days given the need to formulate a final rule as soon as practicable. Based on the above considerations, the agency believes that there is good cause to extend the comment period an additional 45 days and that this decision is consistent with the public interest.

Accordingly, the agency has decided to extend the comment period until May 6, 1993.

Issued on: March 16, 1993.

Barry Felrice,

Associate Administrator for Rulemaking.

[FR Doc. 93-6551 Filed 3-22-93; 8:45 am]

BILLING CODE 4910-59-M

DEPARTMENT OF COMMERCE

National Oceanic and Atmospheric Administration

50 CFR Part 625

[Docket No. 920543-3056]

RIN 0648-AE21

Summer Flounder Fishery

AGENCY: National Marine Fisheries Service (NMFS), NOAA, Commerce.

ACTION: Proposed rule; request for comments.

SUMMARY: NOAA issues this proposed rule to implement a resubmitted portion of Amendment 2 to the Summer Flounder Fishery Management Plan (Amendment 2). This proposed rule would implement, by January 1, 1994, a mandatory reporting requirement for owners of vessels landing summer flounder. The intent of this revision is to replace a measure proposed in the earlier submission of Amendment 2 that was disapproved by the Secretary of Commerce (Secretary).

DATES: Comments are invited through April 7, 1993.

ADDRESSES: Comments on the proposed revision may be sent to Mr. Richard Roe, Regional Director, National Marine Fisheries Service, 1 Blackburn Drive, Gloucester, Massachusetts 01930-3799. Copies of the revised Amendment and the environmental impact statement/regulatory impact review may be obtained from John C. Bryson, Director, Mid-Atlantic Fishery Management Council, room 2115 Federal Building, 300 S. New Street, Dover, DE 19901-6790.

Comments regarding the burden-hour estimates or any other aspect of the collection-of-information requirements contained in this proposed rule should

be sent to the Northeast Regional Director (address listed above) and the Office of Management and Budget (Attention: NOAA Desk Officer), Washington, DC 20503.

FOR FURTHER INFORMATION CONTACT: Kathi L. Rodrigues, Resource Policy Analyst, (508) 281–9324.

SUPPLEMENTARY INFORMATION: Amendment 2 was prepared by the Mid-Atlantic Fishery Management Council (Council) in consultation with the Atlantic States Marine Fisheries Commission. The Council submitted Amendment 2 to the Secretary for review under section 304(b) of the Magnuson Fishery Conservation and Management Act (Magnuson Act). The Magnuson Act requires the Secretary to approve, disapprove or partially disapprove Fishery Management Plans or amendments based upon a determination of consistency with national standards and other applicable law. The Secretary announced disapproval of a provision of Amendment 2 that would have implemented a mandatory vessel logbook requirement for the 1993 fishing season. This disapproval was announced in the final rule to Amendment 2 (57 FR 57358, December 4, 1992).

The mandatory vessel logbook requirement in Amendment 2 was disapproved because NMFS had determined that the logbook requirement, if implemented solely for the summer flounder fishery, would be duplicative of existing reporting requirements and impose unnecessary costs. Instead, NMFS determined that the summer flounder logbook requirement should be consolidated into a coastwide mandatory vessel reporting system for fishing off the Mid-Atlantic and New England coasts, targeted for implementation in 1994. To be consistent with NMFS's plans to implement a coastwide vessel reporting system, the Council resubmitted the summer flounder logbook requirement to the Secretary for review under § 304(b)(3) with the proviso that implementation is to occur by January 1, 1994.

The specific information elements the Council requested to be collected are: (1) The vessel name; (2) the vessel permit number; (3) date sailed; (4) date landed; (5) port landed; (6) area fished; (7) number of tows; (8) duration of fishing time or days actually fished; (9) the total amount in pounds/numbers of each species harvested; (10) the total amount in pounds/numbers discarded by species; (11) crew size; (12) date sold; (13) buyer (dealer); (14) number of anglers per trip for party/charter vessels; (15) and other items required by the Regional Director, Northeast Region (Regional Director).

Although the Council is specific regarding the information it wishes to have collected, by including item 15 above it is clear the Council intends to provide for the collection of additional information that may be required by the Regional Director. Because the mandatory logbook requirement will partially supplant some existing voluntary information collections, the Regional Director proposes to collect the following additional information on the logbook: (1) Gear fished; (2) size/quantity of gear; (3) mesh size; (4) depth range fished; (5) average tow/set time; (6) Loran coordinates; and (7) dealer permit number. This information is necessary for scientific assessments of the stocks and other analyses.

Classification

Section 304(b)(3)(B)(iii) of the Magnuson Act, as amended, requires the Secretary of Commerce to publish immediately revised proposed regulations together with an explanation of substantive changes. At this time, the Secretary has not determined that the revised amendment these rules would implement is consistent with the national standards, other provisions of the Magnuson Act, and other applicable law. The Secretary, in making that determination, will take into account the information, views, and comments received during the comment period.

The Council prepared an environmental impact statement (EIS) for Amendment 2 outlining the possible impacts of management measures of Amendment 2 on the human and biological environments. This revision would not affect the scope or alter the analysis prepared in the EIS for Amendment 2. A copy of the EIS may be obtained from the Council (see **ADDRESSES**).

The Assistant Administrator for Fisheries, NOAA, initially determined that this proposed rule is not a "major rule" requiring a regulatory impact analysis under Executive Order 12291. This determination is based on the regulatory impact review (RIR) prepared for Amendment 2 that demonstrates negative net short-term economic benefits, but positive long-term economic benefits to the fishery under the management measures. This proposed rule containing a revision to the Amendment does not alter the economic impacts analyzed in the RIR for Amendment 2. This action is not expected to have: (1) An annual effect on the economy of $100 million or more; (2) a major increase in costs or prices for consumers, individual industries, Federal, State, or local government agencies, or geographic regions; or (3) significant adverse effects on competition, employment, investment, productivity, innovation, or the ability of U.S. based enterprises to compete with foreign-based enterprises in domestic or export markets. A copy of the RIR may be obtained from the Council (see **ADDRESSES**).

Before the provision to make vessel logbooks mandatory for 1993 was disapproved by the Secretary, the reporting requirements were reviewed and approved under the Paperwork Reduction Act, OMB Approval No. 0648–0212 (Vessel Logbooks). This proposed rule revises the existing requirement, and a request for approval of this revision has been submitted to the Office of Management and Budget. The revision does not change the reporting burden of 5 minutes/response, which includes the time necessary for reviewing instructions, searching existing data sources, gathering and maintaining the data needed, and completing and reviewing the collection-of-information requirements.

Send comments regarding these burden-hour estimates or any other aspect of these collection-of-information requirements, including suggestions for reducing the burden hours, to Richard Roe, NMFS, and to the Office of Management and Budget (Attention NOAA Desk Officer) (see **ADDRESSES**).

The General Counsel of the Department of Commerce certified to the Small Business Administration that this proposed rule, if adopted, will not have a significant economic impact on a substantial number of small entities because the impacts of the mandatory vessel logbook requirements are minimal.

The Council determined that this rule, if adopted, would be implemented in a manner that is consistent to the maximum extent practicable with the approved coastal zone management programs of Maine, New Hampshire, Massachusetts, Rhode Island, Connecticut, New York, New Jersey, Pennsylvania, Delaware, Maryland, Virginia, and North Carolina. This determination was submitted for review by the responsible State agencies under section 307 of the Coastal Zone Management Act.

This proposed rule does not contain policies with federalism implications sufficient to warrant preparation of a federalism assessment under Executive Order 12612.

List of Subjects in 50 CFR Part 625

Fisheries, Reporting and recordkeeping requirements.

Dated: March 18, 1993.

Samuel W. McKeen,

Program Management Officer, National Marine Fisheries Service.

For the reasons set forth in the preamble, 50 CFR part 625 is proposed to be amended as follows:

PART 625—SUMMER FLOUNDER FISHERY

1. The authority citation for part 625 continues to read as follows:

Authority: 16 U.S.C. 1801 *et seq.*

2. Section 625.6 is amended by adding the text of paragraphs (b) and (c) to read as follows:

§ 625.6 Recordkeeping and reporting requirements.

* * * * *

(b) * * * (1) *Daily fishing log.* The owners of a vessel issued a moratorium permit that is not fishing as a vessel for hire, shall maintain, on board the vessel, an accurate daily fishing log for each fishing trip, on forms supplied by, or approved by, the Regional Director, showing at least:

(i) Vessel name;
(ii) Vessel permit number;
(iii) Date sailed;
(iv) Date landed;
(v) Port landed;
(vi) Gear fished;
(vii) Size/quantity of gear;
(viii) Mesh size;
(ix) Area fished;
(x) Depth range fished;
(xi) Number of tows or sets;
(xii) Days fished;
(xiii) Average tow/set time;
(xiv) Loran coordinates;
(xv) Pounds kept by species;
(xvi) Pounds discarded by species;
(xvii) Crew size;
(xviii) Date sold;
(xix) Dealer name;
(xx) Dealer permit number; and
(xxi) Any other information required by the Regional Director.

(2) *When to fill in log.* Vessel owners shall ensure that such logbooks are filled in, except for information that is not yet known, before landing any summer flounder at the end of a fishing trip. All logbook information required in paragraph (b)(1) of this section must be filled in for each fishing trip before starting the next fishing trip.

(3) *Inspection.* The owner or operator shall, immediately upon request, make the logbook available for inspection by an authorized officer, or by an employee of NMFS designated by the Regional Director to make such inspections, at any time during or after a trip.

(4) *Record retention.* For 1 year after the date of the last entry in the log, the owner shall retain a copy of each logbook at the owner's principal place of business.

(5) *Trip reports.* The owner shall submit trip reports to the Regional Director or an official designee, on forms supplied by, or approved by the Regional Director postmarked within 72 hours of the last calendar day of the month during which the trip is landed. Each owner will be sent forms and instructions, including the address to which to submit reports, shortly after receipt of a fishing permit. If no fishing trip is made during a month, a report so stating must be submitted postmarked within 72 hours after the last calendar date of the month.

(c) * * * (1) *Daily fishing log.* The owner of any party or charter boat issued a permit under § 625.4 and carrying passengers for hire shall maintain, on board the vessel, an accurate daily fishing log for each charter or party fishing trip, on forms supplied by or approved by the Regional Director, showing at least:

(i) Vessel name;
(ii) Vessel permit number;
(iii) Date sailed;
(iv) Date landed;
(v) Port landed;
(vi) Gear fished;
(vii) Size/quantity of gear;
(viii) Area fished;
(ix) Depth range fished;
(x) Days fished;
(xi) Number and pounds kept by species;
(xii) Number and pounds discarded by species;
(xiii) Crew size;
(xiv) Number of anglers; and
(xv) Any other information required by the Regional Director;

(2) *When to fill in log.* Vessel owners shall ensure that such logbooks are filled in at the end of each fishing trip. All logbook information required in paragraph (c)(1) of this section must be filled in for each fishing trip before starting the next fishing trip.

(3) *Inspection.* The owner shall, immediately upon request, make the logbook available for inspection by an authorized officer, or by an employee of NMFS designated by the Regional Director to make such inspections, at any time during or after a trip.

(4) *Record retention.* For 1 year after the date of the last entry in the log, the owner shall retain a copy of each logbook at the owner's principal place of business.

(5) *Trip reports.* The owner shall submit trip reports to the Regional Director or an official designee, on forms supplied by, or approved by the Regional Director postmarked within 72 hours of the last calendar day of the month during which the trip is landed. Each owner will be sent forms and instructions, including the address to which to submit reports shortly after receipt of a fishing permit. If no fishing trip is made during a month, a report so stating must be submitted postmarked within 72 hours after the last calendar date of the month. If no fishing trip is made during a month, a report so stating must be submitted.

[FR Doc. 93-6613 Filed 3-18-93; 5:09 pm]

BILLING CODE 3510-22-M

Notices

Federal Register
Vol. 58, No. 54
Tuesday, March 23, 1993

This section of the FEDERAL REGISTER contains documents other than rules or proposed rules that are applicable to the public. Notices of hearings and investigations, committee meetings, agency decisions and rulings, delegations of authority, filing of petitions and applications and agency statements of organization and functions are examples of documents appearing in this section.

DEPARTMENT OF AGRICULTURE

Animal and Plant Health Inspection Service

[Docket No. 93-027-1]

Availability of List of U.S. Veterinary Biological Product and Establishment Licenses and U.S. Veterinary Biological Product Permits, Issued, Suspended, Revoked, or Terminated

AGENCY: Animal and Plant Health Inspection Service, USDA.

ACTION: Notice.

SUMMARY: This notice pertains to veterinary biological product and establishment licenses and veterinary biological product permits that were issued, suspended, revoked, or terminated by the Animal and Plant Health Inspection Service, during the month of January 1993. These actions have been taken in accordance with the regulations issued pursuant to the Virus-Serum-Toxin Act. The purpose of this notice is to inform interested persons of the availability of a list of these actions and advise interested persons that they may request to be placed on a mailing list to receive the list.

FOR FURTHER INFORMATION CONTACT: Ms. Maxine Kitto, Program Assistant, Veterinary Biologics, Biotechnology, Biologics, and Environmental Protection, APHIS, USDA, room 838, Federal Building, 6505 Belcrest Road, Hyattsville, MD 20782, (301) 436-8245. For copies of the list or to be placed on the mailing list, write to Ms. Kitto at the above address.

SUPPLEMENTARY INFORMATION: The regulations in 9 CFR part 102, "Licenses For Biological Products," require that every person who prepares certain biological products that are subject to the Virus-Serum-Toxin Act (21 U.S.C. 151 *et seq.*) shall hold an unexpired, unsuspended, and unrevoked U.S. Veterinary Biological Product License. The regulations set forth the procedures for applying for a license, the criteria for determining whether a license shall be issued, and the form of the license.

The regulations in 9 CFR part 102 also require that each person who prepares biological products that are subject to the Virus-Serum-Toxin Act (21 U.S.C. 151 *et seq.*) shall hold a U.S. Veterinary Biologics Establishment License. The regulations set forth the procedures for applying for a license, the criteria for determining whether a license shall be issued, and the form of the license.

The regulations in 9 CFR part 104, "Permits for Biological Products," require that each person importing biological products shall hold an unexpired, unsuspended, and unrevoked U.S. Veterinary Biological Product Permit. The regulations set forth the procedures for applying for a permit, the criteria for determining whether a permit shall be issued, and the form of the permit.

The regulations in 9 CFR parts 102 and 105 also contain provisions concerning the suspension, revocation, and termination of U.S. Veterinary Biological Product Licenses, U.S. Veterinary Biologics Establishment Licenses, and U.S. Veterinary Biological Product Permits.

Each month the Veterinary Biologics section of Biotechnology, Biologics and Environmental Protection prepares a list of licenses and permits that have been issued, suspended, revoked, or terminated. This notice announces the availability of the list for the month of January 1993. The monthly list is also mailed on a regular basis to interested persons. To be placed on the mailing list you may call or write the person designated under "FOR FURTHER INFORMATION CONTACT."

Done in Washington, DC, this 17th day of March 1993.

Lonnie J. King,

Acting Administrator, Animal and Plant Health Inspection Service.

[FR Doc. 93-6588 Filed 3-22-93; 8:45 am]

BILLING CODE 3410-34-M

Forest Service

Exempt Decision for Sharp Salvage Timber Sale From Appeal, Malheur National Forest, OR

AGENCY: Forest Service, USDA.

ACTION: Notice to exempt decisions from administrative appeal.

SUMMARY: This is a notification that the decision to implement the Sharp Salvage Timber Sale, located on the Long Creek Ranger District, Malheur National Forest is exempted from appeal. This is in conformance with provisions of 36 CFR 217.4(a)(11) as published in the **Federal Register** on January 23, 1989 (54 FR 3342).

EFFECTIVE DATE: March 23, 1993.

FOR FURTHER INFORMATION CONTACT: John L. Shoberg, District Ranger, or Carol Cushing, Timber Management Planner, Long Creek Ranger District, 528 E. Main Street, John Day, Oregon 97845, phone (503) 575-1731.

SUPPLEMENTARY INFORMATION: An epidemic infestation of western spruce budworm has been affecting major portions of the Malheur National Forest. Much of the infestation is in areas that support timber stands. In the Summer of 1992, interdisciplinary teams (IDT's) surveyed much of the infested area. The IDT's assessed the damage to the resources which included damage to vegetation, to soils, and to water.

A district IDT identified the need to salvage the timber, which is dead or dying, in as short a time as possible so the logs would remain merchantable. Merchantable timber in the area averages 11 inches in diameter at breast height. Rapid drying of insect-killed trees is resulting in cracking or "checking," especially in the smaller diameter trees. This will quickly reduce the value of sawlogs. It is also desirable to complete the logging quickly to begin regeneration as soon as possible, thus establishing new stands more quickly.

The environmental analysis of these actions began in June 1992. After public contact with individuals and State and federal agencies, the following major issues were identified: (1) Forest restoration and (2) visual management.

The Sharp IDT developed three alternatives to analyze, including the No-Action Alternative. The effects of these alternatives are disclosed in a project file which was prepared for the proposal. Since the harvest activity fits a category of action that may be categorically excluded from documentation in an environmental assessment or environmental impact statement, a Decision Memo will be

prepared (Forest Service Handbook 1909.15, section 31.2).

The selected alternative would harvest about 284 acres of heavily infested timber and produce about 800,000 board feet of timber. No new roads would be constructed. This alternative meets the visual management objectives for the harvest in the middle-ground of the Highway 395 visual corridor. This treatment will provide for long-term cover and move the area towards the desired future condition. These stands presently do not meet cover definitions due to recent timber harvest and continuous defoliation from the western spruce budworm.

Biological evaluations have been completed for all plant, wildlife and fish Proposed, Endangered, Threatened and Sensitive species within both project areas. The Biological Evaluation indicates that the project could proceed as planned.

This salvage timber sale and accompanying work is designed to accomplish the objectives as quickly as possible and minimize the amount of salvage volume lost. To expedite this salvage, it has been exempted from appeal (36 CFR part 217). Under this Regulation, the following is exempt from appeal:

Decisions related to rehabilitation of National Forest System lands and recovery of forest resources resulting from natural disasters or other natural phenomena, such as wildfires * * * when the Regional Forester * * * determines and gives notice in the **Federal Register** that good cause exists to exempt such decisions from review under this part.

After publication of this notice in the **Federal Register**, the Decision Memo for the Sharp Salvage Timber Sale may be signed by the Long Creek District Ranger. Therefore, this project will not be subject to review under 36 CFR part 217.

Dated: March 17, 1993.

Robert T. Jacobs,

Deputy Regional Forester.

[FR Doc. 93-6563 Filed 3-22-93; 8:45 am]

BILLING CODE 3410-11-M

Agricultural Marketing Service

[Docket No. TB-93-08]

National Advisory Committee for Tobacco Inspection Services; Meeting

In accordance with the Federal Advisory Committee Act (5 U.S.C. App.) announcement is made of the following committee meeting:

Name: National Advisory Committee for Tobacco Inspection Services.

Date: April 7, 1993.

Time: 1:30 p.m.

Place: Tobacco Division, Agricultural Marketing Service, U.S. Department of Agriculture, Flue-Cured Tobacco Cooperative Stabilization Corporation Building, 1306 Annapolis Drive, Raleigh, North Carolina 27608.

Purpose: To elect officers, review various regulations issued pursuant to the Tobacco Inspection Act (7 U.S.C. 511 *et seq.*) and to discuss the level of tobacco inspection and related services. In particular, the Committee will analyze the financial status of the inspection program and recommend the rate of the user fee for the 1993-94 selling season.

The meeting is open to the public. Persons, other than members, who wish to address the Committee at the meeting should contact the Director, Tobacco Division, AMS, U.S. Department of Agriculture, Room 502 Annex Building, P.O Box 96456, Washington, DC 20090-6456, (202) 205-0567, prior to the meeting. Written statements may be submitted to the Committee before, at, or after the meeting.

Dated: March 19, 1993.

L.P. Massaro,

Acting Administrator.

[FR Doc. 93-6800 Filed 3-22-93; 8:45 am]

BILLING CODE 3410-02-M

DEPARTMENT OF COMMERCE

International Trade Administration

[A-580-812]

Final Determination of Sales at Less Than Fair Value: Dynamic Random Access Memory Semiconductors of One Megabit and Above From the Republic of Korea

AGENCY: Import Administration, International Trade Administration, Department of Commerce.

EFFECTIVE DATE: March 23, 1993.

FOR FURTHER INFORMATION CONTACT: John Beck, Office of Antidumping Investigations, Import Administration, International Trade Administration, U.S. Department of Commerce, 14th Street and Constitution Avenue NW., Washington, DC 20230; telephone: (202) 482-3464.

FINAL DETERMINATION:

Background

Since publication of the affirmative preliminary determination on October 29, 1992 (57 FR 49006), the following events have occurred.

The respondents in this investigation, Samsung Electronics Co., Ltd., and Samsung Semiconductor, Inc. (Samsung), Hyundai Electronics Industries Co., Ltd., and Hyundai Electronics America (Hyundai), and Goldstar Electron Co., Ltd., and Goldstar Electron America (Goldstar), requested a public hearing on November 2, 6, and 9, 1992, respectively. On November 9, 1992, petitioner in this investigation, Micron Technology, Inc., requested to participate in the public hearing. We also received letters requesting to participate in the hearing from Apple Computer, Inc. (Apple), AST Research, Inc. (AST), Compaq Computer Corporation (Compaq), Digital Equipment Corporation (Digital), and the Korean Semiconductor Industry Association (KSIA).

We conducted verification of the cost portions of the questionnaire responses for the three respondents between November 4 and 23, 1992, in Korea, and on November 13 and 14, 1992, in Japan (for Samsung's related suppliers). We conducted verification of the sales portions of the questionnaire responses for the three respondents between November 9 and 18, 1992, in Korea, on November 13 and 14, 1992, in Singapore (for Hyundai's third-country sales), and between November 19 and 24, 1992, in California.

Interested parties submitted comments regarding the scope of this proceeding between October 13, 1992, and January 19, 1993. We received comments from petitioner, respondents, and the following interested parties: (1) AnTel; (2) Apple; (3) AST; (4) Compaq; (5) Digital; (6) Hewlett-Packard Company (Hewlett-Packard); (7) Motorola, Inc. (Motorola); and, (8) Texas Instruments Inc. (TI).

Case briefs were filed on January 26 and 27, 1993, by petitioner, respondents and the following interested parties: (1) Apple; (2) Compaq; (3) Digital; (4) Hewlett-Packard; and (5) Motorola. Rebuttal briefs were filed on February 2 and 3, 1993, by petitioner, respondents and the following interested parties: (1) Apple; (2) AST; (3) Compaq; and (4) Hewlett-Packard. A public hearing was held on February 2 and 3, 1993.

Hyundai and Goldstar submitted revised sales tapes that corrected clerical errors discovered at verification on January 26 and February 12, 1992, respectively. On February 22, 1992, Samsung submitted a revised sales and cost tape that corrected clerical errors discovered at verification.

Scope of Investigation

In our preliminary determination, we invited all interested parties to comment on the scope exclusion requests received prior to the preliminary determination. We received comments

on the scope of the investigation as noted in the "Background" section of this notice. The comments submitted by the parties concerned whether the following merchandise is included within the scope of the investigation: (1) Future generations of DRAMs; (2) memory boards containing Korean DRAMs; (3) removable, separable memory modules placed on motherboards; and, (4) the Korean DRAM content of defective memory products reimported into the United States for repair or replacement. We have determined that: (1) Future generations of DRAMs are within the scope; (2) memory boards are within the scope, while boards that have a function other than memory, such as video graphic adapter (VGA) boards/cards are outside the scope; (3) removable memory modules contained in motherboards are within the scope, unless the importer certifies that neither it, nor a party related to it or under contract to it, will remove the modules after importation into the United States; and, (4) merchandise reimported for repair or replacement is outside the scope. For a detailed discussion of our determinations regarding the scope issues, see a March 15, 1993, memorandum from Acting Deputy Assistant Secretary Moreland to Acting Assistant Secretary Spetrini.

The products covered by this investigation are dynamic random access memory semiconductors (DRAMs) of one megabit and above from the Republic of Korea. For purposes of this investigation, DRAMs are all one megabit and above dynamic random access memory semiconductors, whether assembled or unassembled. Assembled DRAMs include all package types. Unassembled DRAMs include processed wafers, uncut die and cut die. Processed wafers produced in Korea but packaged, or assembled into memory modules, in a third country are included in the scope; however, wafers produced in a third country and assembled or packaged in Korea are not included in the scope.

The scope of this investigation includes memory modules. A memory module is a collection of DRAMs the sole function of which is memory. Modules include single in-line processing modules (SIPs), single in-line memory modules (SIMMs), or other collections of DRAMs whether unmounted or mounted on a circuit board. Modules that contain other parts that are needed to support the function of memory are covered. Only those modules which contain additional items which alter the function of the module to something other than memory, such as video graphics adapter (VGA) boards and cards, are not included in the scope.

The scope of this investigation also includes video random access memory (VRAMs), as well as any future packaging and assembling of DRAMs.

The scope of this investigation also includes removable memory modules placed on motherboards, with or without a CPU, unless the importer of motherboards certifies with the Customs Service that neither it, nor a party related to it or under contract to it, will remove the modules from the motherboards after importation.

The scope of this investigation does not include DRAMs or memory modules that are reimported for repair or replacement.

The DRAMs subject to this investigation are classifiable under subheadings 8473.30.4000, 8542.11.0001, 8542.11.0024, 8542.11.0026 and 8542.11.0034 of the Harmonized Tariff Schedule of the United States (HTSUS). Although the HTSUS subheadings are provided for convenience and customs purposes, the written description of the scope of this investigation is dispositive.

Period of Investigation

The period of investigation (POI) is November 1, 1991, through April 30, 1992.

Such or Similar Comparisons

We have determined that the products covered by this investigation constitute three categories of such or similar merchandise: (1) Dynamic random access memory semiconductor chips of one megabit and above; (2) video random access memory semiconductor chips of one megabit and above; and (3) memory modules. Furthermore, in accordance with 19 CFR 353.58 of the Department's regulations, we compared U.S. sales to home market or third country sales made at the same level of trade. Where we were unable to match sales at the same level of trade, we made comparisons across levels of trade.

Fair Value Comparisons

To determine whether sales of DRAMs from Korea to the United States were made at less than fair value, we compared the United States price (USP) to the foreign market value (FMV), as specified in the "United States Price" and "Foreign Market Value" sections of this notice.

United States Price

For Goldstar, Hyundai and Samsung, we based USP on purchase price, in accordance with section 772(b) of the Tariff Act of 1930, as amended (the Act), when the subject merchandise was sold to unrelated purchasers in the United States prior to importation and when exporter's sale price (ESP) methodology was not otherwise indicated.

In addition, for Goldstar, Hyundai and Samsung, where certain sales to the first unrelated purchaser took place after importation into the United States, we based USP on ESP in accordance with section 772(c) of the Act.

For Goldstar and Samsung, because a value-added tax (VAT) was paid on home market sales but not on U.S. sales, we added to the U.S. selling price, for price-to-price comparisons, the amount of the VAT that would have been collected if the export sales had been taxed. Because no VAT was paid on Hyundai's third country sales, we did not make this adjustment to Hyundai's selling price. For Goldstar and Samsung, we recalculated this VAT, where appropriate, to reflect the fact that discounts were granted on sales to the United States. Also for Goldstar and Samsung, because import duties were paid on raw material inputs used to produce DRAMs sold in the home market, we added to USP the amount of duty that would have been collected if the merchandise had been sold in the home market. For all respondents' U.S. sales, except Goldstar's purchase price sales, we recalculated credit, where appropriate, to reflect the fact that discounts were granted on sales to the United States. Goldstar granted no discounts on its purchase price sales. However, for purchase price sales Goldstar did not report imputed credit expenses. Instead, it reported credit costs actually incurred which were verified by the Department. Therefore, we did not recalculate credit for Goldstar's purchase price sales (*see* Comment 18 in the "Analysis of Comments Received" section of this notice).

We made additional, company-specific adjustments as follows:

A. Goldstar

For Goldstar, we calculated purchase price based on packed, f.o.b., f.c.a., or c.i.f. prices to unrelated customers in the United States. We made deductions, where appropriate, for foreign brokerage and handling, foreign inland insurance, air freight, and air insurance. In addition, we disallowed Goldstar's claimed VAT credit expense, because we find that there is no statutory or regulatory basis for making such an adjustment. (see Comment 19).

We calculated ESP based on packed, ex-U.S. warehouse prices to unrelated customers in the United States. We made deductions, where appropriate,

for discounts, rebates, foreign brokerage and handling, foreign inland insurance, air freight, air insurance, U.S. duties, U.S. inland freight, U.S. brokerage, credit expenses, warranty expenses, royalty payments, U.S. commissions, U.S. subsidiary packing and U.S. and Korean indirect selling expenses, including inventory carrying costs. For certain sales Goldstar reported no date of payment as the firm had not yet received payment for these sales. As best information available (BIA), we have used the longest period calculated between date of shipment and date of payment for Goldstar's other ESP sales to calculate the credit period when the payment date was missing. We recalculated Korean inventory carrying costs to include an additional inventory holding period discovered at verification.

B. Hyundai

For Hyundai, we calculated purchase price based on packed, f.o.b. prices to unrelated customers in the United States. We made deductions, where appropriate, for foreign brokerage and handling. Hyundai granted no discounts on its purchase price sales. Therefore, no adjustment for discounts was made. We recalculated U.S. credit to reflect the financing costs incurred by Hyundai on its direct sales to Singapore, rather than on its sales through its subsidiary in Singapore.

We calculated ESP based on packed, ex-U.S. warehouse prices to unrelated customers in the United States. We made deductions, where appropriate, for discounts, rebates, foreign brokerage, air freight, U.S. inland freight, U.S. duty, insurance, merchandise processing, U.S. brokerage, U.S. subsidiary packing, credit expenses, commissions, royalties, bank charges, price protection expenses and indirect selling expenses, including inventory carrying costs.

For DRAMs that were further manufactured into memory modules after importation, we deducted all value added in the United States, pursuant to section 772(e)(3) of the Act. The value added consists of the costs of the materials, fabrication, and general expenses associated with the portion of the merchandise further manufactured in the United States, as well as a proportional amount of profit or loss attributable to the value added. Profit or loss was calculated by deducting from the sales price of the memory module all production and selling costs incurred by the company for the memory module. The total profit or loss was then allocated proportionately to all components of cost. Only the profit or loss attributable to the value added was deducted. In determining the costs incurred to produce the memory module, we included: (1) materials, (2) fabrication, and (3) general expenses, including selling (SG&A), and interest expenses.

C. Samsung

For Samsung, we calculated purchase price based on packed, f.o.b., c&f, or c.i.f. prices to unrelated customers in the United States. We made deductions, where appropriate, for foreign brokerage and handling, foreign inland freight, foreign inland insurance, air freight, and air insurance. Samsung granted no discounts on its purchase price sales. Therefore, no adjustments for discounts was made. In the preliminary determination we treated U.S. banking charges as direct selling expenses since there was no narrative description of these charges and the charges appeared to be directly related to the sales. The parties have not challenged our treatment of this expense and we are continuing to treat it as a direct selling expense.

We calculated ESP based on packed, ex-U.S. warehouse prices to unrelated customers in the United States. We made deductions, where appropriate, for discounts, foreign brokerage and handling, foreign inland freight, air freight, air insurance, U.S. inland freight, U.S. brokerage, U.S. commissions, foreign banking charges, product liability premiums, credit expenses, royalty payments, advertising and sales promotion expenses, warranty expenses, U.S. subsidiary packing and U.S. and Korean indirect selling expenses, including inventory carrying costs. We continue to treat U.S. banking charges as a direct selling expense.

Foreign Market Value

In order to determine whether there were sufficient sales of DRAMs in the home market to serve as a viable basis for calculating FMV, we compared the volume of home market sales of DRAMs to the volume of third country sales of DRAMs in accordance with section 773(a)(1)(B) of the Act. We found that the home market was viable for sales of DRAMs by Goldstar and Samsung. For Hyundai, the home market was not viable and, therefore, we based FMV on third country sales. We selected Singapore as the third country because the merchandise exported to Singapore was most similar to the merchandise exported to the United States, the volume of Hyundai's Singapore sales during the POI was the largest of any third country, and the marketing conditions of Singapore were comparable to those in the United States. See 19 CFR 353.49(b).

In the preliminary determination, the Department treated Goldstar's and Samsung's local letter of credit sales as export sales. However, based on further analysis, we have concluded these sales are home market sales (*see* Comment 9 in the "Analysis of Comments Received" section of this notice). For Goldstar, we have included in the price of these sales the amount of duty that would have been charged to home market customers had these DRAMs remained in Korea. For Samsung, these sales were not reported in the home market sales listing. Due to the fact that the treatment of these sales remained an issue until it was too late for the Department to request a revised home market sales listing from Samsung, we are not including these sales in our analysis. However, in future administrative reviews, we will require that Samsung report all of its local letter of credit sales as home market sales.

Since Goldstar sold DRAMs to related parties in the home market, we examined those sales to determine if they were made at arm's length. To conduct this test, we compared the gross unit prices of sales to related and unrelated customers net of all movement charges, direct and indirect selling expenses, value-added tax and packing. Based on the results of that test, we discarded from Goldstar's home market database all related party sales not made at arm's length.

As stated in our preliminary determination, the Department initiated investigations to determine whether Goldstar and Samsung made home market sales at less than their respective costs of production (COP), and whether Hyundai had third-country sales at less than COP.

If over 90 percent of a respondent's sales of a given model were at prices above the COP, we did not disregard any below-cost sales because we determined that the respondent's below-cost sales were not made in substantial quantities. If between ten and 90 percent of a respondent's sales of a given model were at prices below the COP, and such sales were over an extended period of time, we discarded only the below-cost sales. Where we found that more than 90 percent of respondent's sales were at prices below the COP, and such sales were over an extended period of time, we disregarded all sales for that model and calculated FMV based on constructed value (CV). No evidence was presented to indicate that below COP prices would permit recovery of all costs within a reasonable

period of time in the normal course of trade.

In order to establish that below cost sales were made over an extended period of time, we performed the following analysis on a product-specific basis: (1) If a respondent sold a product in only one month of the POI and there were sales in that month below the COP, or (2) if a respondent sold a product during two months or more of the POI and there were sales below the COP during two or more of those months, then below-cost sales were considered to have been made over an extended period of time.

In order to determine whether home market or third country prices were below the COP, we calculated the COP based on the sum of a respondent's cost of materials, fabrication, general expenses, and packing. We adjusted respondents' cost data as described below:

For Goldstar, the Department relied on the submitted COP and CV information, except in the following instances where the costs were not appropriately quantified or valued:

1. We reclassified certain capitalized costs from R&D and construction in progress to current costs of production;
2. We recomputed Goldstar's R&D costs based on the ratio of its total semiconductor R&D incurred during 1991 to its total semiconductor cost of sales for 1991;
3. We revised Goldstar's general and administrative (G&A) expense calculation to include total general R&D expense incurred during 1991;
4. We revised interest expense using Goldstar's audited financial statements for the year ended December 31, 1991;
5. We included amounts related to gains and losses on foreign currency translation in general expenses; and
6. We lagged cost of manufacture for the length of time it takes Goldstar to assemble and final test a DRAM, and for the average number of days die stock and finished goods remained in inventory during the POI.

For Hyundai, the Department relied on the submitted COP and CV information, except in the following instances where the costs were not appropriately quantified or valued:

1. We reclassified certain capitalized fixed assets from the construction in progress account and recalculated the depreciation expense to be included in current costs of production;
2. We rejected an adjustment made by Hyundai to its cost of manufacturing (COM) related to its off-spec merchandise, since this adjustment was not specific to each product and the calculation did not use a comparable basis for the quantity of off-spec and non-off-spec products;
3. We included in G&A an amount for the 1991 exchange losses which Hyundai deferred in its financial statements;
4. We recomputed Hyundai's research and development (R&D) percentage based on the ratio of total semiconductor R&D expense incurred during 1991 to total semiconductor cost of sales for 1991;
5. We lagged costs for the length of time it takes Hyundai to assemble and final test a DRAM, and for an estimate of the average number of days die stock and finished goods remained in inventory during the POI; and
6. We revised interest expense to reflect the proportional amount incurred by the semiconductor business.

For Samsung, the Department relied on the submitted COP and CV information except in the following instances where costs were not appropriately quantified or valued:

1. We adjusted material costs to include exchange losses;
2. We revised depreciation expense to reflect costs based on the asset's acquisition cost allocated on a straight line basis over the assets useful life;
3. We recalculated R&D costs to reflect the current costs incurred for all semiconductors;
4. We revised general expenses to include foreign exchange translation losses; and,
5. We revised interest expense to reflect the proportional amount incurred by the semiconductor business.

For CV to purchase price comparisons, for all respondents, we made circumstance-of-sale adjustments, where appropriate, for bank charges, royalty payments, advertising and credit expenses. For Samsung, we added to CV U.S. commissions and deducted the weighted-average home market indirect selling expenses, including advertising, up to the amount of U.S. commissions, in accordance with 19 CFR 353.56(b)(1). For Hyundai, we deducted from CV third-country commissions and added U.S. indirect selling expenses up to the amount of the third-country commissions in accordance with 19 CFR 353.56(b)(1).

For CV to ESP comparisons, for all respondents, we made deductions, where appropriate, for credit expenses, royalty payments, bank charges and advertising. We also deducted from CV the weighted-average home market or third-country indirect selling expenses, including, where appropriate, inventory carrying costs. We limited this adjustment by the amount of indirect selling expenses incurred on U.S. sales, in accordance with 19 CFR 353.56(b)(2) and, where appropriate, the amount of commissions incurred on U.S. sales, in accordance with 19 CFR 353.56(b)(1).

For home market or third-country price to purchase price comparisons, pursuant to 19 CFR 353.56(a)(2), for all respondents, we made circumstance-of-sale adjustments, where appropriate, for credit expenses, royalty payments, bank charges and advertising. For Goldstar and Samsung, we also made a circumstance-of-sale adjustment for the difference between VAT on home market sales and that which would have been collected on U.S. sales if the export sales had been taxed. For all respondents, we deducted home market or third-country packing costs and added U.S. packing costs.

For home market or third country price to ESP comparisons, for all respondents, we made deductions, where appropriate, for credit expenses, royalty payments, bank charges and advertising. We also deducted from FMV the weighted-average home market or third-country indirect selling expenses, including, where appropriate, inventory carrying costs, up to the amount of indirect selling expenses and commissions incurred on U.S. sales, in accordance with 19 CFR 353.56(b). For Goldstar and Samsung, we also made a circumstance-of-sale adjustment for the difference between VAT on home market sales and that which would have been collected on U.S. sales if the export sales had been taxed. For all respondents, we deducted home market or third country packing costs and added U.S. packing costs. We made additional, company-specific adjustments as follows.

A. Goldstar

For Goldstar, when we calculated FMV based on delivered prices to unrelated customers in the home market, we made deductions for inland freight and inland insurance.

B. Hyundai

For Hyundai, when we calculated FMV based on third country, f.o.b. Kimpo Airport or ex-Singapore warehouse prices to unrelated customers in the third country, we made deductions for discounts, rebates, air freight, insurance, brokerage, and third country inland freight. For third-country price to purchase price comparisons, we deducted third-country commissions and added U.S. indirect selling expenses up to the amount of third-country commissions, in accordance with 19 CFR 353.56(b)(1). We have reclassified as commissions certain expenses Hyundai characterized as

rebates, based on our findings at verification. In addition, we disallowed the inclusion of common advertising expenses in indirect selling expenses because we found at verification that the majority such expenses were incurred for sales outside Singapore.

C. Samsung

For Samsung, when we calculated FMV based on delivered prices to unrelated customers in the home market, we made deductions for inland freight. For home market price to purchase price comparisons, we added to FMV U.S. commissions and deducted the weighted-average home market indirect selling expenses, including inventory carrying costs, up to the amount of U.S. commissions, in accordance with 19 CFR 353.56(b)(1).

Currency Conversion

We made currency conversions based on the official exchange rates in effect on the dates of the U.S. sales as certified by the Federal Reserve Bank.

Verification

As provided in section 776(b) of the Act, we verified information provided by respondents by using standard verification procedures, including on-site inspection of the manufacturers' facilities, the examination of relevant sales and financial records, and selection of original source documentation containing relevant information.

Analysis of Comments Received

General Issues

Comment 1: Micron claims that in addition to the unresolved problems noted by the Department in the preliminary determination several new and significant problems were discovered during verification. Petitioner points to the numerous problems outlined in the verification report and argues that the Department must use BIA.

Petitioner claims that Hyundai failed verification because the Department could not rely on Hyundai's financial statements to confirm product specific COPs and because of numerous other problems. Pointing to other investigations, *e.g.*, Antifriction Bearings (Other than Tapered Roller Bearings) from Germany, 54 FR 18992 (May 3, 1989) where the inability to tie worksheets to company documents resulted in the use of BIA, petitioner contends that the Department should follow its prior practice and not use Hyundai's response at all. If used, the Department must make adjustments for all the areas in which Hyundai failed verification.

For Goldstar, petitioner alleges that the verification of a certain product's COP was not adequate and that BIA must be used for this product. See also Comment 21.

Since much of Samsung's cost data could not be verified or the costs were understated, petitioner claims that the COP and CV data must be rejected or, if not, fully restated using BIA.

Hyundai argues that it did not fail verification and that it was fully cooperative in every phase of the proceeding. Hyundai states that the facts in the Antifriction Bearings from Germany investigation are unlike the facts in this case and that BIA is not proper when a respondent provides a complete response to the best of its knowledge.

Goldstar contends that BIA is not warranted, that the company cooperated at every stage of the investigation, and that the Department completely verified the COP related to the particular product as well as every cost and production aspect of Goldstar's manufacturing.

Samsung argues that BIA should not be used because: 1) the verification report reflects that Samsung's cost reconciled completely to Samsung's normal cost accounting system; 2) the Department found no discrepancies between Samsung's submitted costs and the actual data verified; 3) although the Department's report lists "certain issues for consideration," each of those issues relates solely to theoretical methodological issues rather than to the validity of the underlying data; and 4) the specific issues listed by petitioner justifying use of BIA are all groundless.

DOC Position: The Department's review of the nature and the complexities of the COP issues for the three respondents indicates that although there were some issues related to the adequacy of the verification, others were theoretical methodological issues. In those instances where we found insufficient verification support, we relied on BIA. For the theoretical methodological issues, as appropriate, the costs were recalculated to quantify or value that particular cost element. See the following comments for specific adjustments.

Comment 2: Petitioner argues that the purpose of the Department's COP and CV analyses is to approximate as closely as possible the actual costs associated with the production of the subject merchandise. Thus, costs such as general expenses, including interest expenses, must be allocated to the COP. The petitioner claims that although interest expense may generally be allocated based on cost of sales, in prior cases the Department has used a number of different methods to allocate interest expenses as dictated by the facts of those cases. Petitioner argues that Hyundai's and Samsung's methods, *i.e.*, interest expense allocated by cost of sales, should not be used because this methodology does not consider salient facts. Petitioner argues that, since semiconductor production is an extremely capital intensive business, relative to the cost of other inputs and in comparison with other lines of business in which the firms are engaged, the Department should allocate interest expenses based on fixed assets.

Hyundai argues that the petitioner's claim that interest expense should be allocated on the basis of fixed assets: (1) Is contrary to standard Department practice; (2) would distort Hyundai's financing costs; and, (3) is not in accordance with the directions contained in the questionnaire, which specifically directed respondents to allocate interest expense on the basis of cost of sales. Additionally, Hyundai claims that not all assets are financed with borrowing and that even though a business line such as semiconductors may have a relatively high fixed asset value, it may also generate large amounts of cash, as variable costs are low.

Samsung states that the Department's longstanding and consistent policy is to base financing expenses on the cost of goods sold and that the cases petitioner has cited are isolated instances in which the Department subsequently reversed itself in administrative reviews. Further, Samsung argues that in prior semiconductor cases the Department has used the consolidated or combined cost of goods sold.

DOC Position: The Department generally accepts interest expense allocated by the cost of sales because that methodology often approximates the interest expense related to the production of the investigated merchandise. However, the Department has used other allocation methodologies when the facts of particular cases have required a change. After reviewing the facts in this case, we have found that for Samsung and Hyundai, a larger proportion of total fixed assets are related to the semiconductor line of business than to other lines of business. While the Department acknowledges that not all assets are financed through borrowings, it also recognizes that funds obtained from debt and equity are fungible and that the method used to finance the purchase of an asset is not relevant to the appropriate allocation

basis. For these companies, because of this disproportional amount of fixed assets related to semiconductors, allocation of interest expense based on cost of sales would not appropriately recognize the expense related to the capital investment necessary for semiconductors compared to the other lines of business. Thus, the Department reallocated interest expense on the basis of proportional fixed assets to account for these facts.

Comment 3: Petitioner states that the methodology used by the respondents to account for certain exchange rate gains and losses, *i.e.*, capitalization and amortization over three to five years, does not identify the effects of the change with the period in which the gains and losses occurred. Thus, this method would identify such gains and losses with sales in future periods. Petitioner also argues that although Korean generally accepted accounting principals (GAAP) may permit this practice, for antidumping purposes, the Department must calculate a COP for the period under investigation. In order to accomplish this in the past, the Department has not always accepted the investigated country's GAAP. See Offshore Platforms Jackets and Piles from the Republic of Korea 51 FR 11788 (April 7, 1986), where the exchange gains and losses were expensed in the year in which they occurred.

Goldstar argues that the Department should not make an adjustment to cost for the amortized gains and losses on foreign currency translation because these costs are not actual but unrealized costs based on outstanding foreign currency monetary assets and liabilities. Accordingly, there is no outflow of funds from the company. Also, Goldstar states that including the gains and losses would not be in accordance with long-standing policy since: (1) Goldstar had not identified them with the product; (2) it would be a departure from the company's own accounting treatment; and (3) there is no reason to believe the costs are understated.

Hyundai and Samsung agree with Goldstar and add that these gains and losses are hypothetical and that only amounts over five percent of the stock of the company are deferred. They argue that the amount under five percent is expensed by the company.

DOC Position: In determining the COP for the POI, the Department includes all costs incurred during the POI. If losses are deferred to some future time, the costs would not be appropriately matched to the sales of the company during the POI.

In reply to respondents' contention that there is no outflow of funds for these losses and that these losses and gains are hypothetical, the Department notes that pursuant to Korean GAAP: (1) Only that portion of the loss or gain over 5 percent is deferred; and (2) the portion of the loss under 5 percent of equity is recognized in the current period. The fact that the amount under 5 percent of equity is expensed confirms that Korean GAAP considers these losses to be real even if there is no outflow of funds. The Department has, therefore, recognized the amount of the exchange gains and losses incurred during the period, whether expensed or deferred, and included them in current G&A.

Comment 4: Petitioner claims that the Department should allocate all R&D costs related to semiconductors to the total COM of semiconductors to determine the R&D related to DRAMs. Arguing that both future generation DRAM R&D and current non-DRAM semiconductor R&D provide benefits to the subject merchandise and to other semiconductors, petitioner maintains that R&D cannot be identified with a specific product. Additionally, petitioner argues that although Korean GAAP permits a company to amortize R&D expenses, such a practice does not meet the needs of the antidumping statute. In the semiconductor agreement, petitioner states that the Department recognized that semiconductor R&D had to be treated in a special manner and allocated current semiconductor R&D over the COM of semiconductors. Petitioner argues that the current expenses must be borne by current revenues and points out that U.S. GAAP does not permit the capitalization and amortization of R&D because of the high failure rate and the uncertainty of the successful development of products and lacks of measurability of the future benefits from the R&D.

Hyundai maintains that the Department should accept Hyundai's practice of amortizing R&D costs since it is in accordance with Korean GAAP. Hyundai argues that Korean GAAP more accurately reflects product specific costs than U.S. GAAP since it more closely matches the R&D and the product. Additionally, Hyundai argues that R&D should be identified with each product, as the Department stated in the Final Determination of Erasable Programmable Read Only Memory Semiconductors from Japan (51 FR 39680) (EPROMS) (*i.e.*, when the Department can identify specific costs with a product, the Department should do so).

Goldstar emphasizes that amortization of R&D is more logical since R&D for a new product is a long-term investment, the return on which is realized over the period of the product's useful life. Goldstar claims that the Department recognized this accounting method in other Korean investigations and in 64K Dynamic Random Access Memory Components from Japan (54 FR 15943, April 29, 1986) (64K DRAMs).

Samsung argues that its method should be accepted by the Department. First, it is consistent with Samsung's financial statements. Second, the Department has accepted the amortization of R&D in previous semiconductor and other cases. Third, it is consistent with the matching principle and the life cycle in the DRAM industry. Finally, amortizing product-specific R&D is consistent with International Accounting Standard Number 9.

DOC Position: Semiconductors present unique problems related to R&D. Because the general underlying technology is the same for all semiconductor products, the benefits from the results of R&D, even if intended to advance the design or manufacture of a specific product, provide an intrinsic benefit to other semiconductor products. It is impossible to measure the extent to which R&D benefits one semiconductor product relative to another. Thus, identification of specific R&D costs with any one product causes overstating or understating of these costs in relation to the benefits that product derived from the total R&D expenditures for semiconductors. Capitalizing and amortizing of the R&D costs on a product specific basis over a period of time approximating its commercial life exacerbates the problem because R&D costs can never be assigned to the proper product or time.

Due to the rapid technological changes and the continuing introduction of more advanced products typical of the semiconductor industry, R&D must be conducted on a constant basis by these companies for the development of new products and the advancement of current products. Technological changes and improved manufacturing methods will have application to both current and future generations of the product. Thus, we have used the current expenditure of R&D allocated by the cost of sales for semiconductors to calculate the R&D related to DRAMs.

Contrary to the respondents' claims that their methodology is in accordance with Korean GAAP, this is not the case. While Korean GAAP capitalizes R&D and amortizes it over a three- to five-year period, it does not identify R&D with a specific product nor does it amortize R&D over the commercial life

of the product, thus, in many instances full amortization occurs prior to the introduction of the product in the marketplace.

Comment 5: Because of the delay between input sourcing and final output, petitioner argues that the Department should lag costs so that foreign market sales are matched to costs as calculated in the previous quarter.

Goldstar claims that it maintains finished goods inventory for a very short period of time and its cumulative process cost accounting system incorporates the correct lag for work in process. Goldstar states that the Department should therefore compare sales during each quarter with the COP for that same quarter.

Hyundai contends that the Department should not lag its costs. Its process cost accounting system accurately captures the COP at each stage of manufacture and moves these forward into the next process.

Samsung argues that the Department should not lag its costs. Samsung contends that its process cost accounting system captures the cost of production at each stage of manufacture as the DRAM moves through the production process.

DOC Position: We agree with petitioner in part. For Goldstar and Hyundai, we lagged costs for the length of time it takes for assembly and final test, and for the average inventory holding periods, in order to capture the appropriate costs of the reported sales. The lag time is less than a quarter.

Although Samsung's cost accounting system appropriately accumulated costs as its products flow from one stage of production to another this did not account for the time finished products remain in inventory. Therefore, we lagged Samsung's submitted costs only to reflect the time spent in inventory.

Comment 6: Petitioner claims that respondents' interest expense should not be offset by short-term interest income because they failed to demonstrate that short-term interest income was related to the operations of the company.

Goldstar argues that its interest expense ratio must be adjusted for the proportion of current to total liabilities, or short-term debt to total debt, to assure that only expenses associated with current liabilities are included in financial expenses. Both Goldstar and Samsung argue that they demonstrated the source and nature of their short-term interest income.

Hyundai argues that all of its interest income is directly linked to its manufacturing operations. Further, Hyundai asserts that, at verification, it demonstrated that the interest income was earned on bank deposits and compensating balances.

DOC Position: We agree with respondents in part. Interest expense may be offset by interest accruing from certain types of temporary, short-term investments related to the current operations of the company as long as it has been verified. During verification, the respondents supported their respective claims of short-term interest income. Accordingly, the calculated amount was offset against interest expense. However, the Department includes interest expenses related to short-term activities and the portion of interest expense related to the cost of financing a company's overall permanent long-term assets. Contrary to Goldstar's contention, the Department does not limit the inclusion of financial expenses to that incurred on liabilities related to operations.

Company Specific Issues

Goldstar

Comment 7: Petitioner states that the Department should reject Goldstar's response and use BIA due to the number of errors discovered during verification. Petitioner further argues that if the whole response is not rejected, the Department should use BIA for unreported sales discovered at verification. Petitioner states that BIA should be the highest single margin calculated for any U.S. sales transaction by any respondent.

Goldstar states that it properly reported all home market and U.S. sales. Goldstar further argues that petitioner's remaining sales issues are either incorrect or trivial and that Goldstar fully disclosed to the Department all clerical errors prior to verification.

DOC Position: We agree with Goldstar. We do not believe that the limited number of errors discovered at verification renders Goldstar's response unusable. The omitted sales found at verification accounted for only a small portion of total sales and we have no reason to believe that such sales were intentionally left out of the sales listing. Therefore, we have accepted Goldstar's response, with adjustments based on our findings at verification, which are addressed separately in this section of the notice.

Comment 8: Petitioner argues that the Department should treat all of Goldstar's local letter of credit (local l/c) DRAM sales as U.S. sales since evidence from verification shows that these products were eventually sold in the United States.

Goldstar states that it properly reported local l/c sales of DRAMs destined for the United States as U.S. sales.

DOC Position: We agree with Goldstar. We found at verification that certain, but not all, local l/c sales of DRAMs were ultimately destined for the United States. Goldstar knew the ultimate destination and that such DRAMs were not being substantially transformed into non-subject merchandise. Goldstar reported these sales as U.S. sales, and we have treated them as such for purpose of the final determination. See Comment 9 for a discussion of Goldstar's other l/c sales.

Comment 9: Goldstar argues that its local l/c sales to Korean original equipment manufacturers (OEMs) should be treated by the Department as home market sales. For these sales, Goldstar states that it does not know the ultimate export destination of the finished products, and that these finished products are not within the class or kind of merchandise subject to this investigation.

DOC Position: We agree with Goldstar. In our preliminary determination, we treated all local letter of credit sales to OEMs in Korea for all respondents as export sales, in response to a request made by Samsung. However, based on a further analysis of this issue, we believe that these sales are more appropriately considered to be home market sales, since Goldstar does not know the ultimate export destination of the merchandise, and the merchandise that is exported is not within the class or kind of merchandise subject to this investigation. Therefore, we are treating these sales as home market sales for all respondents.

Comment 10: Petitioner argues that since Goldstar did not accurately report its home market inventory carrying charges by device type, and since there is a significant differential between the inventory periods for different types, the Department should use as BIA in calculating inventory charges the longest inventory period for all U.S. sales and the shortest inventory period for all home market sales.

Goldstar maintains that its methodology for reporting inventory carrying charges is reasonable and should be accepted. Goldstar further argues that applying the inventory periods suggested by petitioner would result in virtually no impact on the margin calculations since the inventory periods apply equally to both home market and U.S. sales.

DOC Position: We agree with Goldstar. After a review of Goldstar's questionnaire responses as well as the

information discovered at verification, we believe that Goldstar's methodology for reporting inventory carrying charges accurately reflects its expenses, and we have accepted these charges as reported.

Comment 11: Petitioner contends that the Department should reject Goldstar's calculation of indirect selling expenses, since it combined and reallocated ASIC and non-ASIC services fees when Goldstar's own accounting records split these expenses.

Goldstar states that its calculation of indirect selling expenses is accurate. Goldstar argues that a service fee was common to ASIC and non-ASIC only during November and December, 1991. Goldstar stated that it was only during these months that it combined and reallocated this fee based on the number of employees.

DOC Position: We agree with Goldstar. Based on information reviewed at verification, we believe that the indirect selling expenses reported by Goldstar are accurate.

Comment 12: Petitioner argues that the Department should use the average inventory carrying transit period that it calculated for two sample months at verification to calculate U.S. inventory carrying charges.

Goldstar argues that its average inventory period calculated for shipment from Korea to the United States was reasonable. Goldstar further stated that if the Department finds some adjustment is warranted, the average number of days should be used.

DOC Position: We agree with petitioner. Using our calculation of the inventory carrying transit period for two sample months, which we performed at verification, we adjusted inventory carrying costs. As BIA, we included the inventory carrying period calculated for November and December, 1991 in the calculation of U.S. inventory carrying costs because: (1) Goldstar was unable to support its reported figure; (2) the Department calculated a larger inventory carrying period in a month that Goldstar claimed was representative of the POI; and (3) the inventory carrying period calculated for November and December represented one third of the POI.

Comment 13: Petitioner argues that the Department should include an amount in COM for certain module royalty payments made by Goldstar, since these amounts were not included in the COM.

Goldstar argued that it listed these royalty payments as a selling expense. Goldstar further stated that the Department must ensure that these royalties are not double counted in the COM.

DOC Position: We are treating these royalty payments as selling expenses and have made sure that these payments are not included in the COM.

Comment 14: Goldstar states that the Department should assign constructed value according to the date the merchandise was shipped, not the date the merchandise was sold. Goldstar argues that CV reflects production costs, which correlate with the shipment of a product, not the sale of a product.

Petitioner argues that such a procedure would be contrary to the Department's practice and therefore should not be undertaken.

DOC Position: We agree with petitioner. In accordance with 19 CFR 353.50(b), the Department calculates CV according to the date the merchandise was sold, and Goldstar has provided no justification for deviation from that practice.

Comment 15: Goldstar argues that the Department should not include inventory carrying costs in its calculation of constructed value for purchase price sales, as these expenses are adjusted only for ESP sales.

DOC Position: We agree with Goldstar and have not included these costs in the calculation of constructed value for purchase price sales.

Comment 16: Goldstar states that the Department should match sales in the U.S. and home markets at comparable levels of trade. Goldstar argues that the record establishes that in both the U.S. and home markets Goldstar sold to both original equipment manufacturers and distributors which are two distinct levels of trade. Goldstar maintains that: (1) The Department verified that Goldstar made sales at two distinct levels of trade; and (2) the Department's regulations and longstanding administrative practice require that sales be compared at the same level of trade.

Petitioner states that the Department is not required to make comparisons at the same level of trade. Petitioner also states that the Department should not consider this point since a correlation coefficient test provided by petitioner demonstrates only a weak correlation between both prices and selling expenses and level of trade.

DOC Position: We agree with Goldstar and, where possible, have compared products at the same level of trade for all respondents, in accordance with 19 CFR 353.58. For models where we were unable to match sales at the same level of trade, we made comparisons regardless of the level of trade. Goldstar made no effort to quantify a level-of-trade adjustment; therefore, we did not make such an adjustment.

Comment 17: Goldstar argues that the Department should exclude Goldstar's sales of merchandise which were off-specification from its margin calculation.

Petitioner argues that Goldstar's off-spec sales to the United States should be included in its margin calculations. Petitioner states that Goldstar will continue to produce off-spec devices in the future and the market for these devices is well-established and constant.

DOC Position: We agree with petitioner. We see no reason why these sales should be excluded from our analysis. This merchandise is within the scope of this investigation; therefore, we kept these sales in our margin calculations.

Comment 18: Goldstar states that the Department double-counted Goldstar's credit expense on purchase price transactions by making an additional adjustment for imputed credit expenses. Goldstar maintained that it fully reported all credit expenses actually incurred for purchase price sales in its response. Therefore, Goldstar argued that the Department should not adjust for any additional credit expenses on purchase price transactions in its final determination.

DOC Position: Based on the information obtained at verification, we have determined that the credit expenses for purchase price sales reported by Goldstar were its actual credit expenses and have therefore not included imputed credit expenses for purchase price sales in our calculations.

Comment 19: Goldstar states that the Department should make a circumstance-of-sale adjustment for Goldstar's credit expenses for advance tax payments. Goldstar argues that it incurred an expense whenever it made advance value-added tax payments to the Korean government before payment of the tax was received from the customer. Goldstar maintains that the Department verified this payment and an adjustment will conform with the Department's past practice.

DOC Position: We disagree with Goldstar and are not allowing the VAT credit adjustment. As explained in the Final Determination of Sulfur Dyes, including Sulfur Vat Dyes, from the United Kingdom, 56 FR 3253 (January 8, 1993) (Sulfur Vat Dyes), we find that there is no statutory or regulatory basis for making such an adjustment. While we recognize that there may be an opportunity cost associated with the prepayment of VAT, that fact alone is not a sufficient basis for the Department to make an adjustment in price-to-price

comparisons. Therefore, we have not made one here.

Comment 20: Goldstar states that the Department should use the revised computer tape file layout for ESP packing costs.

DOC Position: We agree with Goldstar and have done so.

Comment 21: Petitioner contends that Goldstar failed verification of certain merchandise because Goldstar: (1) Did not adequately support the merchandise's beginning work in process (BWIP); (2) did not calculate the production quantities on the correct yield rate; and (3) did not document certain allocation methodologies. Petitioner concludes that if the number of units over which costs are allocated is incorrect, it becomes irrelevant whether the overall costs themselves are correct or verified. Therefore, because the costs were allocated based on an incorrect production quantity, petitioner argues that the Department must resort to using petitioner's information as BIA.

Goldstar claims that it correctly calculated its BWIP based on its audited 1991 financial statements, and that the yield rates were calculated from accurate and verified production quantities. Therefore, Goldstar contends that the costs were allocated over correct quantities. Also, Goldstar states that: (1) The value of manufacturing costs capitalized as construction in progress (CIP) and R&D during the first six months of 1991 reconciled to its 1991 financial statements; (2) the amounts capitalized were accurate and justified, and (3) certain allocation methodologies were not questioned by the Department.

DOC Position: The Department determined the total COM incurred for production of the subject merchandise during the first six months of 1991 based on the audited financial statements, and verified the production quantities. However, while the amount of manufacturing costs capitalized as CIP and R&D may be tied to company documentation, the Department does not agree that these costs should be capitalized. These costs are more appropriately identified as current costs of production because they include the component costs of manufacture, *i.e.*, materials, labor, and overhead, which should be expensed as incurred. Therefore, the Department reclassified the manufacturing costs capitalized as CIP and R&D to current costs of production.

Comment 22: Goldstar claims that the equivalent units of production factors (EUs) used in its calculation of the costs of the merchandise's work in process (WIP) during the POI were verified to be accurate and part of its normal accounting system.

Petitioner argues that Goldstar provided insufficient documentary support for the EUs used in its cost calculation.

DOC Position: We agree with Goldstar. The EUs used by Goldstar for allocating production costs between WIP and cost of sales (COS) were verified by the Department. Although the EUs used by Goldstar for its submission departed from its 1991 normal accounting system, we verified that Goldstar's methodology provided an accurate reflection of its costs.

Comment 23: Goldstar argues that it correctly calculated its per-unit royalty expenses by dividing royalty expenses incurred in a quarter by the quantity of production for the same quarter and including the resultant amount in COM.

Petitioner argues that Goldstar's method of allocating royalties paid during the POI over POI production understated the royalties that accrued to the DRAMs produced during the POI.

DOC Position: We agree with Goldstar. Goldstar correctly included technological royalties in COM; therefore, no adjustment was made. Moreover, there is no evidence on the record indicating that Goldstar's methodology of allocating quarterly royalty amounts by quarterly production quantities during the POI was distortive.

Comment 24: Goldstar contends that the Department improperly used the interest expense of Goldstar instead of its parent company in the preliminary determination and unjustifiably refused to verify the consolidating workpapers prepared for the Department's use. Goldstar also argues that the Department's rejection of the parent's consolidated statement because it was unaudited and incomplete is not dispositive since the Department has previously accepted unaudited statements and has verified the consolidating workpapers. Goldstar states it could not provide audited consolidated statements because they do not exist.

Petitioner maintains that the Department does not invariably use the financial results of the consolidated company to determine interest expense and emphasizes that Goldstar's interest expense should be used rather than the unaudited figures for the consolidated group of companies because the latter would distort Goldstar's true financing costs. Petitioner counsels the Department to continue to disregard the unaudited consolidated financial statements of the parent.

DOC Position: The Department agrees with petitioner. Absent detailed testing usually associated with an audit, the Department cannot rely on the statements as submitted. Goldstar's contention that at verification it offered to consolidate the parent with other companies it initially excluded does not overcome the fact that substantial audit procedures would have been required before the Department could be assured that the statements were adequately presented. The Department does not perform an audit at verification; rather, verification relies on audited records.

Therefore, we relied on Goldstar's audited financial statements for calculating interest expenses, not its parent's unaudited consolidated statement.

Comment 25: Goldstar argues that it appropriately reported material costs exclusive of losses and gains on foreign exchange transactions related to material purchases, because, in accordance with Korean GAAP, these costs are treated as non-operating gains and losses in its normal cost accounting system. Additionally, Goldstar claims that if the Department were to adjust its costs by including foreign exchange transaction gains or losses in COM rather than in general expenses, the resulting COPs and CVs would remain virtually unchanged.

DOC Position: We disagree with Goldstar. Foreign exchange losses arising from the purchase of raw materials should be included in material cost because this is a component of the COM. However, we have not reclassified these losses from general expenses to COM as it would have no impact on the submitted costs.

Comment 26: Goldstar argues that the amortization of stock and debenture issue costs should be excluded from the interest expense calculation.

DOC Position: We disagree. The Department considers the costs incurred to obtain funds to be part of the normal financing needs of the company. It is longstanding Departmental policy to include financing costs in calculating COP and CV.

Comment 27: Goldstar argues that the R&D of Goldstar Information and Communication, Inc. should not be included in Goldstar's COP. Goldstar purchased the semiconductor division with its related assets and liabilities from Goldstar Information and Communication, Inc., which had already expensed its R&D in its normal accounting system. Therefore, the R&D should not now be amortized and included in Goldstar's COP.

DOC Position: We agree with Goldstar. See also comment 4.

Comment 28: Goldstar argues that we should use the R&D costs as computed

in its response. The firm claims that it correctly computed R&D on a quarterly basis, by dividing its annual amortized R&D expenses for each product line by four and allocating the quarterly amounts over each quarter's cost of sales for each respective product line.

DOC Position: We disagree with Goldstar. In this case, allocating amortized R&D over a product line does not account for overlapping benefits. Thus, we have allocated all semiconductor R&D over semiconductor cost of goods sold. See also comment 4.

Hyundai

Comment 29: Hyundai argues that the basis for FMV should be weighted-average monthly prices. Hyundai also argues that the sales below cost test be performed on the basis of monthly sales and monthly costs. Hyundai believes this is necessary to reflect the declining production costs and the price declines in both the U.S. and Singapore markets during the POI.

Hyundai argues that the Act requires that U.S. prices be compared with contemporaneous home market (or third country) prices. It further argues that the Department is inconsistent in applying a six-month weighted average for investigations and a monthly weighted average for administrative reviews. Hyundai states that the Department has previously tested price stability over time and the variance between annual and monthly prices to determine the appropriateness of annual, as opposed to monthly, averages. Hyundai also states that in the price variance test, the Department determined that annual averages would be representative if more than 90 percent of the home market sales were made at monthly average prices within 10 percent of the annual average price. Hyundai states that it has applied the same two tests to its third country sales database. According to Hyundai, the results of this analysis support the contention that monthly averages are required for this investigation.

Petitioner also states that in applying the price variance test, weighting sales on a quantity basis is more appropriate than weighting by sales value, as done by Hyundai.

DOC Position: We agree with Hyundai. Based on our analysis, we find that monthly weighted average prices for FMV are more representative of Hyundai's pricing than POI averages. We examined the time-price correlation and observed a consistent downward trend in both U.S. and Singapore prices over the POI.

We also examined price variance. Our analysis of respondent's information shows that during the POI a significant number of the third-country sales were made at monthly average prices that vary from the POI average prices. Consequently, where FMV was based on third-country price, we used monthly weighted average FMVs.

Comment 30: Hyundai claims that during the POI, it made a very limited number of sales of so called obsolete models in the United States and Singapore and that the Department should drop such sales from its analysis. Hyundai states that the Department's recently revised policy for disregarding below cost sales caused all third country prices for obsolete models to be disregarded. Hyundai claims that including the sales of obsolete models will distort its normal pricing policies.

As an alternative to excluding these U.S. sales, Hyundai argues for adjusting the below cost test so that third country obsolete models remain in the calculation of FMV. Specifically, Hyundai states that the Department's recent practice of applying only the model-specific "micro" test of the "10–90–10 rule" is inappropriate because it alters the administration of the below cost test of the statute so that small volumes of obsolete models are no longer included in FMV. Respondent further states that once a product is obsolete, all sales of this product are below cost since demand turns to its replacement product. Hyundai also states that the legislative history of section 773 of the Act allows for inclusion of obsolete sales.

DOC Position: We disagree with Hyundai. Although the legislative history of the statute indicates that sales of "obsolete" merchandise at less than cost would be disregarded from the below cost test, we do not consider the merchandise in question to be obsolete. First, the original product is interchangeable with its newer "replacement" model. It serves the same purpose and has the same characteristics as the new product. Second, although these original models were made using a different production process than the new model, because the physical characteristics of the original models are the same as the new models, this difference does not justify classifying the former as "obsolete."

Comment 31: Hyundai states that the Act requires that the U.S. price be reduced by the amount of any increased value resulting from further manufacture of the imported merchandise before the sale to an unrelated party. Hyundai claims that profit should only be allocated to U.S. value-added based on the value-added performed by Hyundai's subsidiary, HEA, in the United States, rather than on the total value added in the United States. Hyundai states that profit is included in the price paid to the unrelated subcontractor which performs the further manufacturing. Hyundai argues that the profit on the value added by an unrelated subcontractor should not be included in the Department's adjustment of USP.

Petitioner requests that the Department allocate profit to Hyundai's U.S. operations. Petitioner states that the accepted profit allocation to U.S. value-added is an apportionment of profit from an individual sale into two parts: The portion resulting from the value added in the U.S. and the portion resulting from the production of the merchandise itself. Petitioner further states that the profitability of the subcontractor is irrelevant.

DOC Position: We agree with petitioner. The fact that the unrelated subcontractor performing further manufacturing earned a profit is irrelevant. The price paid by HEA for the subcontracting services was a cost to HEA and we considered it as such in calculating our profit adjustment.

Comment 32: Hyundai argues that the Department should make an inventory carrying cost adjustment to Hyundai's U.S. price only with respect to DRAMs held in inventory to be sold as finished products, and not with respect to those held in inventory to be further manufactured into modules. Respondent holds that in accordance with the Act, only those expenses associated with selling rather than producing the subject merchandise are intended to be deducted.

Petitioner argues that the Department should continue to calculate inventory carrying costs for all of Hyundai's U.S. sales. Petitioner states that Hyundai incurred an opportunity cost for inventorying finished goods regardless of whether there was any further manufacture at a later date.

DOC Position: We agree with respondent. Our determination in Antifriction Bearings, 56 FR 31692, addressed the opportunity cost of holding inventory in both markets, and also addressed the issue of work-in-progress, which is analogous to the DRAMs to be incorporated into modules. Since these DRAMs are parts of unfinished goods, our inventory carrying cost adjustment is limited to DRAMs sold as finished products.

Comment 33: Hyundai states that the Department incorrectly deducted Hyundai's direct selling expenses from ESP. Hyundai argues that the Department should have added the

direct selling expenses incurred on ESP sales to FMV.

DOC Position: We disagree with Hyundai. In accordance with section 772(e) of the Act, we correctly deducted selling expenses from ESP.

Comment 34: Petitioner contends that, with regard to one of the purchase price transactions the Department reviewed at verification, the Department found that the merchandise that was ordered by the customer was not the merchandise that was actually shipped. In its response, Hyundai reported the model number of the merchandise that was shipped. Petitioner claims that, since the price of the merchandise that was ordered is higher than the merchandise that Hyundai shipped, the Department should use the higher prices for these transactions when calculating FMV.

DOC Position: We disagree with petitioner. We found at verification that Hyundai properly reported the sales prices of the merchandise that was shipped. The fact that Hyundai shipped to the customer merchandise that was different than the customer had ordered originally is irrelevant.

Comment 35: Petitioner argues that the Department should reject third country indirect selling expenses. Petitioner asserts that Hyundai allocated certain common selling expenses on a space allocation basis and that the company does not allocate these expenses in its accounting records. Petitioner claims that the Department's standard practice is to use a company's own expense accounting for submission purposes unless it is contrary to generally accepted accounting principles. Petitioner claims that a reclassification of expenses such as the one in question is disingenuous and it requests that Hyundai's third country indirect selling expenses should be disallowed in their entirety.

Hyundai states that its allocation methodology is accurate and reasonable. It also states that because they are general expenses, they are only allocated for the purposes of responding to the Department's questionnaire.

DOC Position: We disagree with petitioner. For purposes of responding to the Department's questionnaire, Hyundai allocated certain indirect selling expenses common to all divisions of the company to the divisions involved in selling the subject merchandise on the basis of the office space occupied by those divisions. Although Hyundai does not allocate these selling expenses to different divisions in its accounting records, we determined that, for purposes of responding to the Department's questionnaire, the allocation by space was a reasonable method for estimating the portion of certain common selling expenses attributable to the divisions involved in the sale of the subject merchandise.

Comment 36: Petitioner requests that the Department subtract one month from Hyundai's reported date of sale since Hyundai incorrectly reported shipment dates as sale dates. Petitioner states that Hyundai appears to consider a change in the date of shipment as a significant enough change to warrant a reporting date basis which does not reflect the date upon which price and quantity are fixed. Petitioner points to a section of the Department's verification report that discusses a shipment date change as an illustration of a change in the terms of sale. Petitioner states that such a change does not constitute a change in the essential terms of sale. Based on this information, petitioner suggests that verification exhibit DOS-1, listing the percentage of Hyundai's orders for which there were changes in the terms of sale, is artificially inflated. Petitioner requests that, as BIA, the Department lag all sales by one month.

Respondent argues that petitioner has based its argument on only one sample, and that with respect to even that sample, price and quantity did in fact change. Hyundai cites the Department's verification report and the extent to which the Department went to examine changes in the terms of sale. Respondent also states that petitioner's argument is based on speculation.

DOC Position: We disagree with petitioner. The Department thoroughly examined Hyundai's methodology for determining date of sale during verification and found no major discrepancies with respondent's data.

Comment 37: Petitioner requests that the Department treat warranty expenses as direct selling expenses. Petitioner states that the Department's verification report shows that all U.S. warranty expenses were assigned to a particular division of the company, and none to the semiconductor division, in Hyundai's general ledger. However, the report also states that the Department did not examine individual claims to see if any were, in fact, related to semiconductors. Petitioner requests that since no direct evidence was provided to show that these expenses are incurred only in relation to sales of non-subject merchandise, the Department should, as BIA, assign all U.S. warranty expenses to sales of subject merchandise as direct selling expenses.

Hyundai states that the Department verified that all of the warranty expenses incurred by Hyundai related to the other division of the company that is not involved in the sale of subject merchandise. Hyundai states that the Department reviewed the general ledger and examined all after-service or warranty expenses.

DOC Position: We disagree with petitioner. The Department examined warranty expenses at verification. We found no warranty expenses directly attributable or related to sales of the subject merchandise. Therefore, we treated Hyundai's warranty expenses as indirect selling expenses.

Comment 38: Hyundai argues that the cost verification report does not reflect the accuracy of Hyundai's data because of misleading statements and "suggested conclusions." It claims that the Department traced the data submitted in its questionnaire response to total costs and allocation bases, and to the financial statements. Additionally, they point out that the allocation bases used for the submission were also used for the financial statements and that the financial statements are reliable.

DOC Position: The Department lists "Issues for Consideration" in its verification reports to alert all parties to its concerns. Quantification of the magnitude of errors or the effect of differences in methodology may be part of the discussion of these issues. In no way should these issues be construed to be conclusions. The Department reaches its final positions only after considering all parties' comments.

Comment 39: Petitioner argues that the verification shows that Hyundai significantly understated the amount of construction in progress that should have been reclassified. Petitioner states that there is no indication that the COM and spare parts were included in the COP and that the entire amount of the CIP should be reclassified and allocated over production during the POI.

Petitioner also argues that because there was a difference in the depreciation used by Hyundai for existing and reclassified assets and the depreciation which would have resulted based on the useful life of those assets, the Department should recalculate the total depreciation.

Hyundai argues that the Department overstated the impact of the costs which were not reclassified for its response. The firm claims that the effect of any errors found at verification regarding the reclassification of the machinery and equipment (M&E) was minimal. Hyundai points out that the Department's recalculation of depreciation had a number of methodological flaws because, although it was based on the asset ledger value, it did not account for: (1) M&E which was used only for a partial year; (2) M&E

which was fully depreciated during 1991; and (3) salvage value of the assets.

DOC Position: For the response, Hyundai reclassified certain M&E from the CIP account to the fixed asset ledger account. This M&E, although entered into production, had not been transferred to the fixed asset ledger and depreciated. Additionally, Hyundai increased the depreciation for other M&E already on its fixed assets ledger, but for which depreciation had not been calculated. When we tested the reclassification of M&E from the CIP account to the fixed asset account, we noted a substantial number of discrepancies in our sample. Furthermore, the reclassification of only that M&E over a certain value was not appropriate, since this method excluded from reclassification a significant amount of M&E below that threshold. Therefore, the information on the asset ledger is not reliable, and we have based Hyundai's depreciation on BIA.

Comment 40: Hyundai claims that the Department has concluded erroneously that the amount paid by Hyundai for the construction of facilities by a related company covered only the direct cost incurred by that company.

DOC Position: The amount of the adjustment would have no impact on the depreciation amount. Therefore, we made no adjustment.

Comment 41: Hyundai argues that contrary to the Department's verification report, exchange gains and losses on purchases of materials used to manufacture the product under investigation have never been included as part of the COP. Additionally, Hyundai states that they were not instructed to include such gains or losses as part of the material costs nor do normal accounting standards consider such exchange fluctuations as part of material costs. Hyundai claims that the Department should follow its standard practice of including exchange gains and losses as part of general expense.

DOC Position: The Department's questionnaire specifically indicates that all expenses associated with obtaining materials should be included as part of the reported cost of materials. Although the questionnaire includes some specific examples of material costs, material costs are not limited to the examples provided. Contrary to Hyundai's assertion, the Department has in prior cases included exchange gains and losses related to obtaining materials as part of the material costs, see, *e.g.*, Man-Made Fiber Sweaters from the Republic of Korea, 55 FR 32659 (August 10, 1990). Although some companies' cost accounting might include such costs as part of general expenses, the focus of the Department's analysis is the cost of production of a specific product, rather than the overall financial results of the company.

Comment 42: Hyundai states that for its submission, the company expensed all interest incurred during the POI, including interest which had been capitalized in the company's official accounts because: (1) The company believes that capitalization of interest expense is not automatically authorized by U.S. GAAP; (2) interest capitalization is contrary to the Department's standard practice of not specifically identifying interest expenses with assets or product lines due to the fungibility of financing costs; and (3) the capitalization of interest, if properly calculated, would result in a lower cost than reported by Hyundai.

DOC Position: The Department reviewed the nature of the assets in the CIP and agrees with Hyundai that the interest expense that was part of the CIP should not have been capitalized. Interest expense is capitalized when the assets are being constructed by the company. The assets in Hyundai's CIP account were machinery and equipment waiting to be placed into the production process.

Therefore, the Department agrees with Hyundai and we included this interest as part of the interest expense calculation.

Comment 43: Hyundai argues that the cost verification report significantly overstates the company's R&D costs. First, Hyundai believes that the Department inappropriately included the fabrication costs of an assembly and test division which are capitalized and should not be assigned to semiconductor production. Second, Hyundai argues that including the historical lump sum expenditures for R&D performed under contract amounts to double-counting. Third, Hyundai declares that using the cost-of-goods-sold (COGS) figure from the financial statements to allocate R&D is inappropriate since the COM for each model has been increased significantly. Fourth, Hyundai believes that the calculation of Hyundai's U.S. subsidiary's semiconductor R&D expense is incorrect. Fifth, Hyundai asserts that machinery and equipment for the R&D department is appropriately classified as part of the CIP account.

DOC Position: With respect to Hyundai's argument that the fabrication costs of an assembly and test division are capitalized, this information was not disclosed at verification and, in fact, is inconsistent with information which was discussed at verification. As BIA, we have included these costs in our calculation of R&D.

We agree with Hyundai's second argument regarding the possible double-counting of lump sum expenditures. Since the repayment of these costs is treated as royalty on sales we have not included these costs in the R&D calculation.

We agree with Hyundai's assertion that the COGS information presented in the financial statement is significantly understated. In order to calculate the R&D percentage applicable to semiconductors, we adjusted COGS for certain of the items included in the CIP account.

Hyundai's argument regarding the calculation of its U.S. subsidiary's semiconductor R&D expense is erroneous. Prior to this final determination the Department had not prepared a calculation of the semiconductor R&D expense. However, the Department's cost verification report provided a mathematically correct comparison of Hyundai's U.S. subsidiary semiconductor R&D to Hyundai's costs. Finally, contrary to Hyundai's assertion, M&E which are in use is not appropriately considered to be CIP, since they are completed and in use.

Comment 44: Petitioner reasons that Hyundai's reported off-spec adjustments to its costs are distortive and needlessly complicated. Petitioner further asserts that off-spec merchandise should be treated in a manner consistent with the way the company treats it in the normal course of business.

Hyundai maintains that the Department should adopt its proposed off-spec merchandise adjustment. Hyundai notes that petitioner fails to provide any support to show how allocating actual costs to produce off-spec merchandise would be distortive. Hyundai further explains that off-spec merchandise costs more than prime product since it incurs additional retesting costs.

DOC Position: We agree with petitioner and have removed from Hyundai's reported costs the off-spec merchandise adjustment prepared by Hyundai for purposes of this antidumping investigation. Absent specific evidence that the company's normal cost accounting system fails to adequately capture a product's COP we will rely on that cost information. We have therefore treated the off-spec merchandise in a manner consistent with respondent Hyundai's normal cost accounting methodology.

Samsung

Comment 45: Petitioner states that Samsung was required to report information about its second U.S. sales subsidiary, including that firm's selling expenses, and did not. Therefore, petitioner argues that since Samsung did not report this information, the Department should reject Samsung's response and use BIA.

Samsung argues that it fully disclosed its relationship with the company in question in its questionnaire responses and, therefore, BIA should not be used.

DOC Position: We agree with Samsung that this company was adequately described in Samsung's section A questionnaire response and, based on this description, we determined that it was not necessary to request additional information regarding the company.

Comment 46: Petitioner argues that Samsung should use 1991 payments for a royalty expense as the best estimate of 1992 payments, rather than report them as zero until the 1992 settlement is reached. Petitioner contends that a potential liability existed for Samsung, and Samsung opted to ignore this liability completely.

Samsung stated that the Department should not impute payments for the royalty expense to 1992 sales. Samsung argued that: (1) It is under no legal obligation to pay a royalty for 1992 sales; (2) no actual expenses have been incurred for these sales; (3) the fact that expenses may be incurred is merely speculative; and (4) any adjustment for royalty expenses should be made in subsequent administrative reviews.

DOC Position: We agree with Samsung that it would not be reasonable to make an adjustment for royalty expenses which were not actually incurred, and may not be incurred, and we have not done so.

Comment 47: Petitioner contends that since Samsung did not report its air freight expenses on the basis of weight, as incurred, the Department should, as BIA, increase all U.S. air freight expenses by the margin of error found at verification. Petitioner states that in accordance with long-standing Departmental practice, expenses should be reported on the same basis as they were incurred.

Samsung states that its methodology for calculating air freight expense is reasonable and is not distortive. Samsung contends that air freight was allocated based on value to be consistent with the allocation methodology for other movement expenses and to avoid distorting per-unit expenses since invoice weights may not be accurate. Samsung also maintains that a value-based allocation overstates air freight expense.

DOC Position: We agree with Samsung and are not increasing its U.S. air freight expenses. For the reasons stated by Samsung, we find that Samsung's allocation methodology provides an accurate reflection of its air freight expenses.

Comment 48: Petitioner argues that the Department's calculation of the weighted-average second royalty expense for its constructed value selling expenses is incorrect and should be recalculated.

Samsung counters that the Department's calculation of the weighted-average second royalty expense for constructed value selling expenses is correct. Samsung argues that petitioner used the wrong sales tape in making its calculations.

DOC Position: We agree with Samsung and have not recalculated the weighted-average second royalty expense.

Comment 49: The petitioner claims that the Department cannot accept the depreciation expense Samsung used for its response, and must instead use BIA. Petitioner states that when Samsung changed its depreciation method from double-declining balance to straight-line, it calculated depreciation on an incorrect basis instead of the retroactively adjusted basis. Furthermore, petitioner argues that Samsung used the total useful life instead of the remaining useful life of the asset.

Samsung argues that its depreciation is fairly stated and that it comes directly from the financial statements which are prepared in accordance with Korean GAAP and audited by a C.P.A. firm. They note that the Department has consistently rejected past attempts to recalculate depreciation expense for a dumping response in a manner different from those reported in the financial statements.

Samsung contends that its methods of depreciation, *i.e.*, straight-line and double-declining balance, used before and after the change in 1991 are permissible and commonly used by companies reporting under U.S. GAAP. Samsung states that a change in accounting principle is allowed under any GAAP. Samsung notes that Korean GAAP and international standards do not require companies to retroactively adjust for an accounting change and that, at the time Samsung made the change, it was permissible under Korean GAAP to base depreciation on the useful life of the assets as opposed to the remaining useful life of the assets. Samsung claims that it used the useful life because at the time of the change, the products manufactured in existing production facilities would have a longer commercial life than expected, and the company would be receiving income over a longer period of time. Therefore, Samsung stated that in order to match the depreciation expenses with the income generated, the useful life of the assets had to be extended.

DOC Position: The fact that the company made an accounting change in the methods used by the company for depreciation, *i.e.*, straight line versus double-declining balance, is not at issue. At issue is the basis and the means used to effect the change.

Generally, the Department relies on the information presented in the company's financial statements and on the country's GAAP when such methods are not distortive for calculating the costs of production. However, in this case, the Department found that the basis used for the financial statement, even if stated in accordance with Korean GAAP at the time of the change, would be distortive for purposes of our antidumping analysis.

In changing its method of depreciation from double-declining to straight-line, Samsung did not retroactively restate the basis of the asset but instead used the net book value of the asset as of the date of restatement. The use of the net book value of the asset as of the date of restatement did not attribute the cost of the asset on a consistent basis over the life of the asset. Therefore, disproportionally greater costs were attributed to products manufactured before the change than subsequent to the change.

Samsung used the total useful life of the assets instead of the remaining useful life of the assets when it changed its method of calculating depreciation. For example, a four-year-old asset at the time of the change, with a useful life of five years, could be extended for another five years. Although, Samsung states that this was in accordance with Korean GAAP at the time of the change, Samsung did not provide any support for this claim. Samsung's argument, that it extended the useful life of the assets because the products' commercial life was longer than anticipated, is not valid because the assets may be used for a number of different products each with varying commercial lives and/or may be replaced during the commercial life of any one of these products.

Therefore, the Department did not rely on the depreciation used by Samsung in its submission but instead recalculated it by restating the basis of

the asset based on BIA. *See* March 11, 1993, Calculation Adjustment Memorandum to Marie E. Parker from Richard C. Lutz for a detailed discussion of the calculation.

Comment 50: Petitioner argues that Samsung was not billed for installation and maintenance costs for its equipment. Petitioner argues that Samsung's submission should be adjusted to account for this understatement of cost.

Samsung argues that all appropriate installation charges were included in its reported equipment costs, as recorded in its books. Samsung states that the installation costs were performed by the equipment vendor as part of the original purchase agreement.

DOC Position: After reviewing the purchase contracts, sales invoices and purchase orders related to equipment purchases, we do not find any evidence that Samsung did not pay the installation costs.

Comment 51: Micron argues that depreciation costs were understated because the entity which constructed part of Samsung's fabrication facility did not charge Samsung a price which was higher than COP.

Samsung argues that the company which constructed its fabrication facilities was not a related party or a member of its chaebol.

DOC Position: In reviewing the verification exhibits, specifically, shareholder lists of the two companies, the Department noted that the company which constructed its fabrication facility is not related to Samsung as defined by the Act. Accordingly, there is no basis for adjusting Samsung's depreciation expenses to account for the construction of the fabrication facility.

Comment 52: Petitioner contends that Samsung failed to provide all of its semiconductor R&D as requested by the Department. Petitioner states that Samsung only provided R&D information for one facility. Petitioner states that as BIA the Department should apply the ratio of expenses incurred at the one facility to all of Samsung's semiconductor operations.

Samsung argues that all R&D expenses have been appropriately calculated. Samsung claims that it correctly reported amortized product development expenses over a three-year period, in accordance with Korean GAAP, its financial statements, the matching concept in accounting theory, and International Accounting Standard Number 9. Samsung also argues that the Department has historically amortized R&D expenses in those cases where it has played a critical role in the development of the product.

Furthermore, Samsung contends that it correctly excluded product-application specific expenditures because the micro products are entirely different from the memory products and therefore, no R&D overlap is possible. Samsung also argues that the Department requires product-specific allocation of R&D.

Finally, Samsung claims that it reasonably accounted for all R&D incurred for the subject merchandise by using an activity-based costing allocation methodology.

DOC Position: For the R&D methodology used in this investigation, see Comment 4. As Samsung did not provide all of the requested R&D for its semiconductor product line (DRAM & non-DRAM), the Department used BIA for purposes of determining Samsung's R&D expenditures. BIA was based upon the information submitted by petitioner. See March 11, 1993, Calculation Adjustment Memorandum to Marie E. Parker from Richard C. Lutz for a detailed discussion.

Comment 53: Petitioner claims the material costs reported by Samsung in its submission are suspiciously low because the Department found that the reported per unit material cost did not reconcile to the Bill of Materials. Petitioner also claims that the explanation given by Samsung for the irreconcilability of the reported per unit material costs makes no sense. Therefore, petitioner argues that the material costs should be adjusted.

Samsung argues that the Department verified the accuracy of the per unit material costs at verification, and that the Department reconciled these expenses to the company records, which themselves demonstrate that Samsung's accounting system fully tracks and absorbs the cost incurred for materials from purchase to production and ultimately to the financial statements. Also, during verification, the company explained that the Bill of Materials is a guide for purchasing and not an absolute standard which outlines the specific amount of materials tracked by device in the cost accounting system.

Samsung questions the validity of the Department's material cost reasonableness test in its verification report because of the effects that production quantities could have on its results and because of the appropriateness of the basis which the Department used in its calculations.

DOC Position: In comparing the selected bill of materials to the submitted material cost, no significant distortion was noted. Therefore, with respect to this issue, no adjustment was made to Samsung's cost.

Comment 54: Samsung contends that, as found at verification, all related party transactions were made at prices above total COP, including selling, general, and administrative expenses (SG&A), and argues, therefore, that we should accept them. Moreover, the company argues that it would be inappropriate to rely upon the financial statements of the parties to determine if a loss/gain was made on the sale from these related companies.

DOC Position: We agree with Samsung. In reviewing the transactions between Samsung and its related entities, we found none that were made below the COP. Accordingly, we made no adjustment to Samsung's cost data with regard to this issue.

Comment 55: Samsung contends that it accounted for foreign exchange gains or losses for its purchases made in foreign currency because the difference in the amount recorded for purchases and the amount paid is fully accounted for in the non-operating section of the income statement. Samsung states that such gains or losses are also reported as general expenses in the submission. Samsung states that this methodology is in accordance with Korean GAAP and is typical of manufacturers worldwide, as it is virtually impossible to account for these gains or losses on a transaction-specific basis.

DOC Position: Although the company may have included the net exchange gain or loss in its general expenses and allocated this amount as part of general expense for the submission, this methodology may not appropriately account for the product costs because the exchange transactions relate specifically to the subject merchandise and not all products produced by Samsung. See Sweaters from Korea (55 FR 32659, August 10, 1990) and Fresh Cut Flowers from Colombia (55 FR 20491, May 17, 1990). In this case the Department found that foreign exchange losses which related directly to the DRAMs were not attributed to the cost of DRAMs. Rather, Samsung has allocated these costs to all products. Therefore, we have made an adjustment to the materials costs for exchange rate fluctuations noted during the POI. In order to avoid double counting, we reduced the general expense amount by the amount added to material cost.

Critical Circumstances

Petitioner alleges that "critical circumstances" exist with respect to imports of DRAMs from the Republic of Korea. Section 735(a)(3) of the Act provides that critical circumstances exist if we determine that:

(A) (i) There is a history of dumping in the United States or elsewhere of the class or kind of merchandise which is the subject of the investigation, or

(ii) The person by whom, or for whose account, the merchandise was imported knew or should have known that the exporter was selling the merchandise which is the subject of the investigation at less than its fair value, and

(B) There have been massive imports of the class or kind of merchandise which is subject of the investigation over a relatively short period.

We normally consider whether there has been an outstanding antidumping order in the United States or elsewhere on the subject merchandise in determining whether there is a history of dumping. We normally consider margins of 25 percent or more, in the case of purchase price sales, or margins of 15 percent or more in case of ESP sales, sufficient to impute knowledge of dumping. Petitioner has provided information concerning an antidumping duty investigation on DRAMs from Korea being conducted by the European Community (E.C.). The E.C. issued its preliminary determination in June of this year, subsequent to the POI in the instant investigation. We have determined that this is not sufficient to establish a history of dumping under section 735(a)(3)(A)(i) of the Act, as an antidumping duty order has not yet been issued by the E.C.

With regard to all respondents, since the final dumping margins are less than 15 percent, we cannot impute knowledge of dumping under section 735(a)(3)(A)(ii) of the act. Therefore, in accordance with section 735(a)(3) of the Act, we determine that critical circumstances do not exist with respect to imports of DRAMs from Korea.

Suspension of Liquidation

In accordance with section 733(d)(1) of the Act, we are directing the U.S. Customs Service to continue to suspend liquidation of all entries of DRAMs from Korea, as defined in the "Scope of Investigation" section of this notice, that are entered, or withdrawn from warehouse, for consumption on or after October 29, 1992, which is the date of publication of our preliminary determination in the **Federal Register**.

The Customs Service shall require a cash deposit or posting of a bond equal to the estimated amount by which the FMV of the merchandise subject to this investigation exceeds the U.S. price, as shown below. This suspension of liquidation will remain in effect until further notice.

Producer/manufacturer/exporter	Weighted-average margin percentage
Goldstar Electron Co., Ltd. and Goldstar Electron America	4.97
Hyundai Electronics Co., Ltd. and Hyundai Electronics America	7.19
Samsung Electronics Co., Ltd. and Samsung Semiconductor, Inc	.74
All others	3.19

ITC Notification

In accordance with section 735(d) of the Act, we will notify the ITC of our determination. The ITC will make its determination whether these imports materially injure, or threaten material injury to, a U.S. industry within 45 days of the publication of this notice. If the ITC determines that material injury or threat of material injury does not exist, the proceeding will be terminated and all securities posted as a result of the suspension of liquidation will be refunded or cancelled.

However, if the ITC determines that such injury does exist, we will issue an antidumping duty order directing Customs officers to assess an antidumping duty on DRAMs from Korea entered, or withdrawn from warehouse, for consumption on or after the date of suspension of liquidation, equal to the amount by which the foreign market value of the merchandise exceeds the United States price.

Notification to Interested Parties

This notice also serves as the only reminder to parties subject to administrative protective order (APO) of their responsibility covering the return or destruction of proprietary information disclosed under APO in accordance with 19 CFR 353.34(d). Failure to comply is a violation of the APO.

This determination is published pursuant to section 735(d) of the Act (19 U.S.C. 1673d(d)), and 19 CFR 353.20(a)(4).

Dated: March 15, 1993.

Joseph A. Spetrini,

Acting Assistant Secretary for Import Administration.

[FR Doc. 93-6553 Filed 3-22-93; 8:45 am]

BILLING CODE 3510-DS-P

[A-122-057]

Replacement Parts for Self-Propelled Bituminous Paving Equipment From Canada; Final Results of Administrative Review of the Antidumping Finding

AGENCY: International Trade Administration/Import Administration, Department of Commerce.

ACTION: Notice of final results of administrative review of the antidumping finding.

SUMMARY: On January 6, 1992, the Department of Commerce published the preliminary results of administrative review of the antidumping finding on replacement parts for self-propelled bituminous paving equipment from Canada (57 FR 396). We have now completed this review and determine the margin to be 4.96 percent for the Allatt Paving Division of Ingersoll-Rand Canada, Inc. (Allatt I-R) during the period September 1, 1989 through August 31, 1990.

EFFECTIVE DATE: March 23, 1993.

FOR FURTHER INFORMATION CONTACT: Anne D'Alauro or Maria Mackay, Office of Countervailing Compliance, International Trade Administration, U.S. Department of Commerce, Washington, DC 20230; telephone: (202) 482-2786.

SUPPLEMENTARY INFORMATION:

Background

On January 6, 1992, the Department of Commerce (the Department) published in the **Federal Register** (57 FR 396) the preliminary results of its administrative review of the antidumping finding on replacement parts for self-propelled bituminous paving equipment from Canada (42 FR 41811; September 7, 1977) covering the period September 1, 1989 through August 31, 1990. The Department has now completed this administrative review in accordance with section 751 of the Tariff Act of 1930, as amended (the Act).

Scope of the Review

Imports covered by this review are shipments of replacement parts for self-propelled bituminous paving equipment, excluding attachments and parts for attachments. This merchandise is currently classifiable under Harmonized Tariff Schedule (HTS) item numbers 4016.93.10, 7315.11.00, 7315.89.50, 7315.90.00, 8336.50.00, 8479.99.00, 8481.20.00, 8482.10.10, 8483.90.90, 8539.29.20, 8544.20.00, 8544.41.00, 8544.51.80, 8544.60.20, and 9015.30.40. The HTS item numbers are provided for convenience and Customs

purposes. The written description remains dispositive.

The review covers one manufacturer/exporter of this merchandise to the United States, Allatt I–R, and the period September 1, 1989 through August 31, 1990.

Analysis of Comments Received

We gave interested parties an opportunity to comment on the preliminary results. We received written comments from the respondent, Allatt I–R, and from the petitioner, Blaw-Knox Construction Equipment Corporation. At the request of both parties, we held a hearing on February 19, 1992.

Comment 1: Respondent contends that the Department double-counted packing costs in its calculation of constructed value. The respondent explains that the reported cost of manufacturing (COM) was derived by subtracting certain expenses from an amount called "total spending." Since packing costs were not among the specific items subtracted from this all-inclusive total, packing costs remain included in the respondent's COM. Because the Department calculated constructed value using the company's COM, which the response demonstrates to have been inclusive of packing, the Department erred by again adding packing to constructed value prior to making U.S. price comparisons.

Department's Position: We disagree with the respondent. Neither the company's initial questionnaire response nor its May 13, 1991 supplemental submission contained or pointed to any specific information that demonstrated that packing costs were included in its COM. In fact, respondent's failure to provide such information in these responses prompted the Department to issue a deficiency questionnaire on September 9, 1991, requesting packing cost information for use in calculating constructed value. Although the respondent provided information on its packing costs in response to this request, the respondent did not demonstrate that packing costs were included in its COM.

Comment 2: Respondent argues that the Department has erroneously calculated the cost difference allowable for determining merchandise which is similar for comparison purposes. In making similar merchandise determinations, the Department measured the difference between the variable cost of manufacture (VCOM) of the U.S. item and the VCOM of the Canadian comparison item, and divided this amount by the total COM of the U.S. item. If this resulted in a difference of less than 20 percent, the Department determined that the Canadian and U.S. items could be reasonably compared. Respondent maintains that the denominator in this formula does not comport with the Department's practice regarding similar merchandise because the VCOM, rather than the COM, of the U.S. part should have been used as the denominator. The respondent notes that, although the Department's antidumping regulations do not specify a methodology for determining similar merchandise, the Department, according to the respondent, should use the methodology detailed in the questionnaire that it received in the succeeding review for this case.

Department's Position: We disagree with the respondent. Section 771(16) of the Act confers upon the Department discretionary authority to identify similar merchandise which may reasonably be compared with the subject merchandise sold in the United States. The Department currently uses 20 percent of the COM of the U.S. product as a guideline in its selection of similar merchandise in order to minimize the effect of certain distortions created in our calculations by a difference in merchandise adjustment. See Final Results of Antidumping Duty Administrative Review: Red Raspberries from Canada (57 FR 49686; November 7, 1992). This methodology, which was applied in this review and was explained to Allatt in the Department's September 9, 1991 supplemental questionnaire regarding the selection of similar merchandise, is consistent with existing practice. Because the proportion of variable to fixed costs can vary significantly among products, the Department chooses to use the COM, rather than the VCOM, as the appropriate denominator, thus providing a reasonably stable basis for evaluating comparability which is not affected by a particular product's proportion of fixed to variable costs. The questionnaire received by the company in the succeeding administrative review of this finding has since been corrected to reflect this practice.

Comment 3: Respondent claims that an erroneous home market price and invoice were mistakenly included with its home market sales information. The incorrect price, inflated by a factor of ten, resulted from an invoicing error. The company subsequently corrected the error and issued a new invoice five days after the error occurred, a copy of which has been provided to the Department. Respondent points out that other home market sales of the same part were made at prices which are the same or close to the correct price. The respondent, therefore, requests that the Department correct the mistake and recalculate the corresponding foreign market value.

Department's Position: After examining the home market sales information and comparing the prices for the same part as the part contained on the invoice in question, the Department agrees that the marked difference in price clearly indicates an error. We have amended the home market sales information to reflect the accurate price for the referenced sale and used this corrected information in our sales comparisons.

Comment 4: Respondent contends that the Department should not have assigned the weighted-average margin of the company to those U.S. sales for which no price-to-price or constructed value comparison was found. Respondent suggests that the Department should have instead used the average margin found on sales where constructed value provided the basis of foreign market value. Respondent argues that the preliminary aggregate margin for all U.S. sales of 7.24 percent is greater than the weighted-average margin for those U.S. sales compared to constructed value. Therefore, had the Department requested constructed value information for the unmatched U.S. sales, it is likely that their weighted-average margin would have been no greater than that for those sales for which constructed value was used. The respondent asserts that, absent the opportunity to submit additional constructed value information for these unmatched sales, it is fair and reasonable that no rate higher than the weighted-average rate for sales using constructed value be assigned.

Department's Position: We disagree with the respondent. The Department recognizes that a gap existed for certain U.S. sales information in this record which required the Department to use "other information" as a reasonable surrogate for the missing data. Rather than make another information request, the Department instead chose to use a neutral and reasonable surrogate to bridge this gap. Not to be confused with "best information available," the Department derives the authority to use neutral information under such circumstances from its own inherent authority to administer the U.S. antidumping law in a fair and equitable manner. In this case, because margins had been calculated on the overwhelming majority of the respondent's U.S. sales transactions, which included identical and similar

price-to-price comparisons as well as constructed value, the weighted-average margin derived from this pool of sales was considered a more appropriate rate to use for unmatched sales. Using only the rate for constructed value matches would have required two assumptions. First, that all unmatched sales would ultimately have been compared to constructed value, and second, that constructed value comparisons provide a systematically different result than do price-to-price comparisons. Because we cannot be confident in these assumptions, we believe a broader group of sales is more appropriate to use for unmatched sales.

Comment 5: In its preliminary results of review, the Department made an adjustment to U.S. price for the Canadian federal sales tax (FST) that would have been imposed had the exported merchandise been subject to the tax. Petitioner argues that this methodology is contrary to law since it fails to measure the "incidence of tax" passed through in the home market and fails to make an adjustment based upon that incidence as required by 19 U.S.C. 1677 a(d)(1)(c) (1988). The petitioner states that the U.S. Court of International Trade (CIT) has held that for purposes of calculating the effect of a foreign tax under the statute, the Department cannot assume that the home market price reflects the full amount of such taxes, or that such taxes are passed through to the ultimate consumer. See *Zenith Elecs. Corp.* v. *United States*, 10 CIT 268, 633 F. Supp. 1382 (1986) (Zenith I); *Zenith Elecs. Corp.* v. *United States*, 14 CIT _____, 755 Supp. 397 (1990) (Zenith II). The petitioner argues that, in reaching its final results of this review, the incidence of tax actually passed through to the consumer must be measured in accordance with the CIT's direct instructions to the Department in the Zenith cases.

Department's Position: The CIT decisions cited to by the petitioner are not binding upon the Department in this proceeding. The Department has consistently disagreed with the Zenith decisions, and has sought an appeal of the "pass through" issue before the Court of Appeals for the Federal Circuit (CAFC). The statutory language "added to or included in the price" appearing in 19 U.S.C. 1677a(d)(1)(C) (1991) does not require a measurement of tax incidence in the home market in an economic sense. Accord In the Matter of Replacement Parts for Self-Propelled Bituminous Paving Equipment from Canada at 43–53, USA–90–1904–01 (May 15, 1992) (hereinafter Accord Replacement Parts). Therefore, consistent with our longstanding practice, we have not attempted to measure the amount of tax "passed through" to the ultimate consumers in the home market. Accord Replacement Parts, USA–90–1904–01 at 43–53. Rather, we have added to the U.S. price the full amount of tax that we conclude the Canadian tax authorities would have collected on export sales had such sales been subject to the tax, as the full amount of the FST was "added to or included in" the price of comparison parts sold in Canada. See 19 U.S.C. 1677a(d)(1)(C) (1991).

Comment 6: The petitioner contends that the Department erroneously made a circumstance-of-sale adjustment to obtain a tax-neutral margin. Petitioner further contends that the Zenith II court expressly prohibited a circumstance-of-sale adjustment to assume tax neutrality. The CIT concluded that the adjustment to U.S. price for tax effects in the home market must be accomplished under the tax pass-through provision, 19 U.S.C. 1677a(d)(1)(C), and not as a circumstance-of-sale adjustment under 19 U.S.C. 1677b(a)(4)(B).

Department's Position: We do not agree with the CIT's decision in Zenith II concerning the circumstance-of-sale (COS) adjustment and have sought an appeal of this issue before the CAFC. Significantly, the rationale underlying these decisions conflicts with a binding Federal Circuit precedent and a recent CIT decision. See *Smith-Corona Group* v. *United States*, 713 F2d 1568 (Fed. Cir. 1983) (COS deduction of indirect selling expenses from foreign market value to achieve an "apples to apples" comparison upheld); see also *Budd Co.* v. *United States*, Slip Op. 90–85 (CIT 1990) (COS adjustment made to correct artificial distortion to foreign currency upheld).

Furthermore, the statute, as implemented by regulation, provides that the Department "shall" make "due allowance" for any price difference between foreign market value and United States price that is "wholly or partly due to" circumstances of sale that are directly related to the sale of the subject merchandise (19 U.S.C. section 1677b(a)(4)(B) (1991); 19 CFR section 353.56 (1991)). The price difference between the foreign market value and the United States price of the subject merchandise is "partly due" to differences in taxation: only home market merchandise is subject to the Canadian FST. Moreover, the imposition of a sales tax is directly related to the sale of the subject merchandise; merchandise sold in the home market cannot incur the tax in the absence of a sale.

Because the claimed COS adjustment satisfied the statutory and regulatory requirements, the Department is required to make the contested adjustment. Accord Replacement Parts, USA–90–1904–01 at 53–57. Failure to do so, when adding the hypothetical FST forgiven on exportation to United States price, would have artificially inflated the respondent's dumping margins. Such a result would have conflicted not only with a binding Federal Circuit precedent, Smith-Corona, *supra*, but also with congressional intent and the General Agreement on Tariffs and Trade (GATT). See *e.g.*, H.R. Rep. No. 317, 96th Cong., 1st Sess. 45 (1979); S. Rep. No. 16, 67th Cong., 1st Sess. 12 (1921); GATT, art. VI(1), (4).

Comment 7: Petitioner argues that the Department must verify whether the FST reported by the respondent was actually paid. In addition, the Department must satisfactorily establish through access to total monthly tax payments and corresponding monthly sales the effective tax rate applicable to the respondent. No tax adjustment should be made without verification of these amounts.

Department's Position: We disagree with the petitioner. Commerce regulations require verification of all factual information relied on in the final results of an administrative review if "good cause for verification exists," or if an interested party makes a timely request for a verification and no verification took place during either of the two immediately preceding administrative reviews. (See, 19 CFR 353.36(a)(IV)(f) and 19 CFR 353.36(a)(1)(V) (A) (B)). Because the Department conducted verification within two previous administrative reviews of this antidumping finding, the Department would conduct verification only if "good cause," such as a previous failed verification, were shown to exist. In this case, however, the Department has insufficient grounds to question respondents payment of the FST, as argued by the petitioner, given that the most recent verification confirmed that the respondent and its corporate predecessor had paid the FST. See, *e.g.*, Replacement Parts, USA–90–1904–01 at 53–57. In conclusion, absent more compelling reasons, the petitioner did not show "good cause" for conducting a verification. Therefore, no verification was required pursuant to the Department's regulations.

Comment 8: Petitioner contends that the Department improperly accepted an untimely submission from the

respondent. On April 12, 1991, the Department issued a supplemental questionnaire requesting such or similar merchandise data from the respondent. No extension of the deadline for filing the computer tape to accompany this supplemental response was granted. The petitioner states that the respondent "presumptuously granted itself an extension and dictated the terms of that extension to Commerce" in submitting the information on diskette rather than on the requested computer tape format. The petitioner argues that pursuant to the statute (19 U.S.C. 1677e(C)) and the Department's regulations (19 CFR 353.37(a)), the Department must reject respondent's submissions in response to the April 12, 1991, supplemental questionnaire and use, as best information available, the rate of 57.13 percent provided in the petition.

Department's Position: We disagree with the petitioner. The Department "may request any person to submit factual information at any time during a proceeding" (19 CFR 353.31(b) (1991). In this instance, subsequent to the respondent's contested submission, the Department requested that all information submitted by the respondent be resubmitted in SAS rather than FORTRAN format. Therefore, this information request with respect to the computer tapes superceded the Department's request of April 12, 1991. The respondent complied with these requests for information and did so in a complete and timely manner.

Comment 9: Petitioner objects to the Department's use of constructed value as the basis for foreign market value in the absence of such or similar home market sales for comparison purposes. According to the petitioner, given the Department's preference for basing foreign market value on third country sales rather than constructed value, it is incumbent upon the Department to look to third country sales of identical or similar parts prior to resorting to constructed value.

Department's Position: We disagree with the petitioner. The Department's current practice is to use constructed value data, rather than third-country sales data, to calculate foreign market value in the absence of home market sales of identical or similar merchandise when the home market is viable. See 19 U.S.C. section 1677b(a)(1), (2) (1991); Tapered Roller Bearings, Four Inches or Less in Outside Diameter, and Certain Components Thereof, from Japan: Final Results of Antidumping Duty Administration Review (56 FR 26056; June 6, 1991). Pursuant to 19 CFR 353.48(a), in this review, the Department determined that, since home market sales of such or similar merchandise exceeded five percent of third country sales of such or similar merchandise, the home market was viable for purposes of establishing foreign market value. Based on this determination, the Department used home market sales, where possible, for purposes of comparison, and constructed value when home market sales were not available except where there were no matches for U.S. sales as noted in Comment 4 above.

Final Results of the Reviews

As a result of our comparison of the U.S. price to foreign market value, we determine that the following margin exists for the review period:

Manufacturer/ exporter	Review period	Margin (percent)
Allatt I–R	9/1/89–8/31/90	4.96

The Department will instruct the Customs Service to assess antidumping duties on all appropriate entries. Individual differences between United States price and foreign market value may vary from the percentages stated above. The Department will issue appraisement instructions directly to the Customs Service.

Furthermore, the following deposit requirements will be effective upon publication of this notice of final results of administrative review for all shipments of the subject merchandise, entered, or withdrawn from warehouse, for consumption on or after the publication date, as provided by section 751(a)(1) of the Act: (1) The cash deposit rate for the reviewed company will be as outlined above; (2) for previously reviewed or investigated companies not listed above, the cash deposit rate will continue to be the company-specific rate published for the most recent period; (3) if the exporter is not a firm covered in this review, a prior review, or the original less-than-fair-value investigation, but the manufacturer is, the cash deposit rate will be the rate established for the most recent period for the manufacturer of the merchandise; and (4) the cash deposit rate for all other manufacturers or exporters will be 4.96 percent. This rate represents the highest rate for any firm with shipments in this administrative review, other than those firms receiving a rate based entirely on best information available.

These deposit requirements, when imposed, shall remain in effect until publication of the final results of the next administrative review.

This notice also serves as a final reminder to importers of their responsibility under 19 CFR 353.26 to file a certificate regarding the reimbursement of antidumping duties prior to liquidation of the relevant entries during the review period. Failure to comply with this requirement could result in the Secretary's presumption that reimbursement of antidumping duties occurred and the subsequent assessment of double antidumping duties.

These administrative reviews and notice are in accordance with section 751(a)(1) of the Act, as amended (19 U.S.C. 1675(a)(1)) and 19 CFR 353.22.

Dated: March 16, 1993.

Joseph A. Spetrini,

Acting Assistant Secretary for Import Administration.

[FR Doc. 93–6554 Filed 3–22–93; 8:45 am]

BILLING CODE 3510–DS–M

National Oceanic and Atmospheric Administration

Pacific Coast Groundfish Fishery

AGENCY: National Marine Fisheries Service (NMFS), NOAA, Commerce.

ACTION: Notice of receipt of an experimental fishing permit application and request for comments.

SUMMARY: This notice announces receipt of an application from the States of Oregon, California, and Washington for experimental fishing permits (EFPs) for vessels participating in an observation program to determine the impacts of fishing for Pacific whiting on Pacific salmon and other prohibited species. If granted, the permits would allow vessels fishing with trawl gear for Pacific whiting in the exclusive economic zone off the coasts of Washington, Oregon, and California to (1) delay sorting, until offloading, of prohibited species caught incidental to the Pacific whiting fishery, and (2) allow overages in groundfish trip limits. These activities would otherwise be prohibited by Federal regulations. Publication of this notice is authorized by the Pacific Coast Groundfish Fishery Management Plan (FMP) and its implementing regulations.

DATES: Comments on this application must be received by April 21, 1993.

ADDRESSES: Send comments to Rolland A. Schmitten, Director, Northwest Region, National Marine Fisheries Service, 7600 Sand Point Way NE., BIN C15700, Bldg. 1, Seattle, WA 98115.

FOR FURTHER INFORMATION CONTACT: Joe Scordino, 206–526–6140.

SUPPLEMENTARY INFORMATION: The FMP and implementing regulations at 50 CFR part 663 specify that EFPs may be issued to authorize fishing that would otherwise be prohibited by the FMP and regulations. The procedures for issuing EFPs are contained in the regulations at 50 CFR 663.10.

An EFP application from the States of Oregon, California, and Washington for vessels participating in an observation program was received on March 2, 1993. The purpose and goal of issuing EFPs would be to implement an observation program, at the request of the Pacific Fishery Management Council (Council), to collect information on the bycatch of salmon and other prohibited species in writing harvests delivered to shoreside processing plants. The EFPs would allow vessels participating in the observation program to delay sorting of salmon and other prohibited species (i.e., Pacific halibut, and Dungeness crab caught seaward of Washington or Oregon) from trawl catches of Pacific whiting until the catch is unloaded at a shoreside processing plant. In addition, in order to collect information on unsorted whiting catch shoreside, the States are requesting that the EFPs exempt the holders from groundfish trip limits when participating in the observation program. Retention of prohibited species would be permitted because participants in the observation program will not be sorting their catch and should not be penalized if prohibited species are incidentally retained or if groundfish trip limits are exceeded by a minor amount. Current groundfish regulations at 50 CFR 663.7(b) stipulate that prohibited species must be returned to sea as soon as practicable with a minimum of injury when caught and brought abroad. The EFPs, which would be issued to designated vessels participating in the observation program, are necessary to authorize retention of prohibited species until delivery shoreside, as well as to allow for the potential of minor groundfish overages. The bycatch of salmon by vessels delivering Pacific whiting to offshore processors and catcher/processor vessels is monitored under a voluntary at-sea observer program. If granted, the EFPs would authorize vessels specified by the States to land unsorted Pacific whiting at designated shoreside processing plants where the incidence of salmon, other prohibited species, and other bycatch can be monitored.

The States anticipate that a minimum of 20 vessels may participate in the observation program from April 15, 1993, when the fishery starts, to December 31, 1993, if fish are still available that late in the year. Unsorted Pacific whiting catches would be delivered only to shoreside processing plants in Newport, Astoria, and Charleston, Oregon; Eureka and Crescent City, California; and Westport and Ilwaco, Washington. State port samplers will monitor the offloading of unsorted Pacific whiting catches, collect information on salmon and other prohibited species and bycatch taken, and arrange for the disposal of salmon. Prohibited species taken will not be sold; disposal options, to be determined by the States, include donation to charitable organizations or reduction to fish meal.

The amount of target species, Pacific whiting, that may be delivered to shoreside processing plants under this EFP would be limited by the 1993 harvest guideline. Based on the salmon bycatch rates observed in 1992, it is expected that the number of incidentally caught salmon may range from 736 to 1,683 fish. The development of this shoreside monitoring program and application for an EFP is being pursued by the States at the request of the Council. Similar EFPs were issued in 1992 to 18 vessels participating in the State observation program.

The application was discussed at the March 9–12, 1993, public meeting of the Council in San Francisco, California. The decision on whether to issue an EFP and determinations on appropriate permit conditions will be based on a number of considerations including recommendations made by the Council and comments received from the public. A copy of the application is available for review at the NMFS, Northwest Regional Office (See **ADDRESSES**).

Authority: 16 U.S.C. 1801 *et seq.*

Dated: March 17, 1993.

David S. Crestin,

Acting Director, Office of Fisheries Conservation and Management, National Marine Fisheries Service.

[FR Doc. 93–6587 Filed 3–18–93; 1:18 pm]

BILLING CODE 3510-22-M

COMMITTEE FOR THE IMPLEMENTATION OF TEXTILE AGREEMENTS

Establishment and Amendment of Import Restraint Limits for Certain Wool Textile Products Produced or Manufactured in Bulgaria

March 18, 1993.

AGENCY: Committee for the Implementation of Textile Agreements (CITA).

ACTION: Issuing a directive to the Commissioner of Customs establishing and amending limits.

EFFECTIVE DATE: March 25, 1993.

FOR FURTHER INFORMATION CONTACT: Naomi Freeman, International Trade Specialist, Office of Textiles and Apparel, U.S. Department of Commerce, (202) 482–4212. For information on the quota status of these limits, refer to the Quota Status Reports posted on the bulletin boards of each Customs port or call (202) 927–5850. For information on embargoes and quota re-openings, call (202) 482–3715.

SUPPLEMENTARY INFORMATION:

Authority: Executive Order 11651 of March 3, 1972, as amended; section 204 of the Agricultural Act of 1956, as amended (7 U.S.C. 1854).

In a Memorandum of Understanding (MOU) dated March 10, 1993 , the Governments of the United States and the Republic of Bulgaria agreed to establish a Bilateral Textile Agreement for wool textile products in Categories 410, 435 and 448, produced or manufactured in Bulgaria and exported during three consecutive one-year periods beginning on January 1, 1993 and extending through December 31, 1995. This MOU supersedes the MOU dated February 3, 1993.

In the letter published below, the Chairman of CITA directs the Commissioner of Customs to establish and amend limits for the period beginning on January 1, 1993 and extending through December 31, 1993.

A description of the textile and apparel categories in terms of HTS numbers is available in the CORRELATION: Textile and Apparel Categories with the Harmonized Tariff Schedule of the United States (see **Federal Register** notice 57 FR 54976, published on November 23, 1992). Also see 58 FR 11220, published on February 24, 1993.

The letter to the Commissioner of Customs and the actions taken pursuant to it are not designed to implement all of the provisions of the MOU dated March 10, 1993, but are designed to assist only in the implementation of certain of its provisions.

J. Hayden Boyd,

Acting Chairman, Committee for the Implementation of Textile Agreements.

Committee for the Implementation of Textile Agreements

March 18, 1993.

Commissioner of Customs,

Department of the Treasury, Washington, DC 20229.

Dear Commissioner: This directive amends, but does not cancel, the directive

issued to you on February 19, 1993, by the Chairman, Committee for the Implementation of Textile Agreements. That directive concerns imports of wool textile products in Category 448, produced or manufactured in Bulgaria and exported during the twelve-month period which began on January 1, 1993 and extends through December 31, 1993.

Effective on March 25, 1993, you are directed, pursuant to the Memorandum of Understanding (MOU) dated March 10, 1993 between the Governments of the United States and the Republic of Bulgaria, to amend and establish limits for wool textile products in the following categories:

Category	Twelve-month limit
410	725,000 square meters.
435	20,000 dozen.
448	20,000 dozen.

Textile products in Categories 410 and 435 which have been exported to the United States prior to January 1, 1993 shall not be subject to this directive.

Textile products in Categories 410 and 435 which have been released from the custody of the U.S. Customs Service under the provisions of 19 U.S.C. 1448(b) or 1484(a)(1) prior to the effective date of this directive shall not be denied entry under this directive.

The limits set forth above are subject to adjustment in the future pursuant to the provisions of the MOU dated March 10, 1993, between the Governments of the United States and the Republic of Bulgaria.

Import charges will be provided at a later date.

In carrying out the above directions, the Commissioner of Customs should construe entry into the United States for consumption to include entry for consumption into the Commonwealth of Puerto Rico.

The Committee for the Implementation of Textile Agreements has determined that these actions fall within the foreign affairs exception of the rulemaking provisions of 5 U.S.C. 553(a)(1).

Sincerely,

J. Hayden Boyd,

Acting Chairman, Committee for the Implementation of Textile Agreements.

[FR Doc. 93-6621 Filed 3-22-93; 8:45 am]

BILLING CODE 3510-DR-F

Request for Public Comments on Bilateral Textile Consultations with the Government of Pakistan on Certain Cotton and Man-Made Fiber Textile Products

March 18, 1993.

AGENCY: Committee for the Implementation of Textile Agreements (CITA).

ACTION: Issuing a directive to the Commissioner of Customs establishing a limit.

EFFECTIVE DATE: March 25, 1993.

FOR FURTHER INFORMATION CONTACT: Anne Novak, International Trade Specialist, Office of Textiles and Apparel, U.S. Department of Commerce, (202) 482-4212. For information on the quota status of this limit, refer to the Quota Status Reports posted on the bulletin boards of each Customs port or call (202) 927-6714. For information on embargoes and quota re-openings, call (202) 482-3715. For information on categories on which consultations have been requested, call (202) 482-3740.

SUPPLEMENTARY INFORMATION:

Authority: Executive Order 11651 of March 3, 1972, as amended; section 204 of the Agricultural Act of 1956, as amended (7 U.S.C. 1854).

On February 28, 1993, under the terms of the Bilateral Cotton, Man-Made Fiber, Silk Blend and Other Vegetable Fiber Textile Agreement, effected by exchange of notes dated May 20, 1987 and June 11, 1987, as amended and extended, between the Governments of the United States and Pakistan, the United States Government requested consultations with the Government of Pakistan with respect to cotton and man-made fiber men's and boys' coats in Categories 334/634.

The purpose of this notice is to advise the public that, pending agreement on a mutually satisfactory solution concerning Categories 334/634, the Government of the United States has decided to control imports during the ninety-day period which began on February 28, 1993 and extends through May 28, 1993 at a level of 44,773 dozen.

If no solution is agreed upon in consultations between the two governments, CITA, pursuant to the agreement, may later establish a specific limit for the entry and withdrawal from warehouse for consumption of textile products in Categories 334/634, produced or manufactured in Pakistan and exported during the prorated period beginning on May 29, 1993 and extending through December 31, 1993, of not less than 91,264 dozen.

A summary market statement concerning Categories 334/634 follows this notice.

Anyone wishing to comment or provide data or information regarding the treatment of Categories 334/634, under the agreement with the Government of Pakistan, or to comment on domestic production or availability of products included in Categories 334/634, is invited to submit 10 copies of such comments or information to J. Hayden Boyd, Acting Chairman, Committee for the Implementation of Textile Agreements, U.S. Department of Commerce, Washington, DC 20230; ATTN: Helen L. LeGrande. The comments received will be considered in the context of the consultations with the Government of Pakistan.

Because the exact timing of the consultations is not yet certain, comments should be submitted promptly. Comments or information submitted in response to this notice will be available for public inspection in the Office of Textiles and Apparel, room H3100, U.S. Department of Commerce, 14th and Constitution Avenue, NW., Washington, DC.

Further comments may be invited regarding particular comments or information received from the public which the Committee for the Implementation of Textile Agreements considers appropriate for further consideration.

The solicitation of comments regarding any aspect of the agreement or the implementation thereof is not a waiver in any respect of the exemption contained in 5 U.S.C. 553(a)(1) relating to matters which constitute "a foreign affairs function of the United States."

The United States remains committed to finding a solution concerning Categories 334/634. Should such a solution be reached in consultations with the Government of Pakistan, further notice will be published in the **Federal Register**.

A description of the textile and apparel categories in terms of HTS numbers is available in the CORRELATION: Textile and Apparel Categories with the Harmonized Tariff Schedule of the United States (see **Federal Register** notice 57 FR 54976, published on November 23, 1992). Also see 57 FR 56904, published on December 1, 1992.

J. Hayden Boyd,

Acting Chairman, Committee for the Implementation of Textile Agreements.

Market Statement—Pakistan

Category 334/634—Cotton and Man-Made Fiber Men's and Boys' Coats

February 1993

Import Situation and Conclusion

U.S. imports of cotton and man-made fiber men's and boys' coats, Category 334/634, from Pakistan reached 137,355 dozen in 1992, more than two and one half times the 53,588 dozen imported in 1991 and 85 percent above the 74,309 dozen imported in 1990. Imports from Pakistan in 1992 accounted for 2 percent of total imports in Category 334/634.

The sharp and substantial increase in Category 334/634 imports from Pakistan is causing a real risk of disruption in the

U.S. market for cotton and man-made fiber men's and boys' coats.

U.S. Production, Import Penetration, and Market Share

U.S. production of cotton and man-made fiber men's and boys' coats, Category 334/634, declined from 5,380,000 dozen in 1987 to a depressed 3,493,000 dozen level in 1991, a decline of 35 percent. U.S. production was up during the first nine months of 1992 from the depressed, recessionary level of the comparable 1991 period. The 1992 production level is expected to exceed the 1991 recessionary level, but remain below previous years' levels. In contrast, U.S. imports of cotton and man-made fiber men's and boys' coats, Category 334/634, increased from 5,164,000 dozen in 1987 to 5,792,124 dozen in 1991, a 12 percent increase. U.S. imports surged in 1992, reaching a record level 7,107,600 dozen, 23 percent above the 1991 level.

The ratio of imports to production rose from 96 percent in 1987 to 166 percent in 1991. This increase continued in 1992, with the ratio of imports to production rising to 188 percent for the first nine months of 1992. The domestic manufacturers' share of the U.S. market fell from 51 percent in 1987 to 38 percent in 1991, a decline of 13 percentage points. This decline continued in 1992, with the domestic manufacturers' share of the market falling to 35 percent for the January-September 1992 period.

Duty-Paid Value and U.S. Producers' Price

Approximately 90 percent of Category 334/634 imports from Pakistan during 1992 entered the U.S. under HTSUSA numbers 6101.20.0010—men's knit cotton overcoats, carcoats, anoraks or similar articles, 6201.92.2050—men's cotton anoraks, windbreakers, or similar articles, other than jackets of corduroy or blue denim, 6201.93.3000—men's or boys' man-made fiber water resistant jackets and 6211.33.0035—men's and boys' man-made fiber track suits, other than trousers. These men's and boys' coats entered the U.S. at landed duty-paid values below U.S. producers' prices for comparable men's and boys' coats.

Committee for the Implementation of Textile Agreements

March 18, 1993.

Commissioner of Customs,

Department of the Treasury, Washington, DC 20229.

Dear Commissioner: This directive amends, but does not cancel, the directive issued to you on November 25, 1992, by the Chairman, Committee for the Implementation of Textile Agreements. That directive concerns imports of certain cotton and man-made fiber textile products, produced or manufactured in Pakistan and exported during the twelve-month period which began on January 1, 1993 and extends through December 31, 1993.

Effective on March 25, 1993, you are directed to remove Category 334 from the designated consultation level (DCL) aggregate. Textile products in Category 334 which are exported on and after February 28, 1993 shall no longer be subject to the DCL aggregate. Import charges already made to Category 334 shall be retained.

Also, you are directed to establish a limit for cotton and man-made fiber textile products in merged Categories 334/634, produced or manufactured in Pakistan and exported during the ninety-day period beginning on February 28, 1993 and extending through May 28, 1993 at a level of 44,773 dozen [1].

Textile products in Category 634 which have been exported to the United States prior to February 28, 1993 shall not be subject to the limit established in this directive.

Textile products in Category 634 which have been released from the custody of the U.S. Customs Service under the provisions of 19 U.S.C. 1448(b) or 1484(a)(1) prior to the effective date of this directive shall not be denied entry under this directive.

In carrying out the above directions, the Commissioner of Customs should construe entry into the United States for consumption to include entry for consumption into the Commonwealth of Puerto Rico.

The Committee for the Implementation of Textile Agreements has determined that this action falls within the foreign affairs exception of the rulemaking provisions of 5 U.S.C. 553(a)(1).

Sincerely,

J. Hayden Boyd,

Acting Chairman, Committee for the Implementation of Textile Agreements.

[FR Doc. 93-6620 Filed 3-22-93; 8:45 am]

BILLING CODE 3510-DR-F

[1] The limit has not been adjusted to account for any imports exported after February 27, 1993.

DEPARTMENT OF DEFENSE

Department of the Army

Notice of Availability (NOA)

March 17, 1993.

To release a Final Environmental Impact Statement (EIS) for the proposed development of the Fort Belvoir Engineer Proving Ground (EPG), Fairfax County, Virginia.

AGENCY: DoD, Headquarters, Department of the Army.

SUMMARY: The Department of the Army currently leases approximately three million square feet of private office space in the Washington, DC area at a direct lease cost of about $54 million per year. In addition, future expansion at Fort Belvoir will put added pressure on the Army's local requirements for space, and will further intensify the Army's need for a low cost alternative to competing for lease space within the private market.

Accordingly, the Department of the Army, pursuant to Public Law 101-189, section 2821, is proposing to develop an 820-acre parcel of government-owned land at the Engineer Proving Ground in Fairfax County, Virginia, in cooperation with the private development community.

The EIS is conceptual rather than site-specific; it is based on a broadly defined development concept. Because the development concept is proposed to be phased over a fifteen to twenty year period, the Army would need to prepare further environmental documentation pursuant to NEPA for each particular phase. This EIS will be used as a tiering document; its results, where applicable, would be incorporated in subsequent NEPA documents.

Alternatives: Alternatives considered in the EIS include:

a. No Build (i.e., No Action)

b. Military Construction Program (MCP) Alternative. This alternative is based on construction of 3.1 million square feet of Army office space using federal funding, i.e. military construction appropriations.

c. The preferred alternative is evaluated. This alternative is based on a 0.55 floor to area ratio, and a mix of residential, commercial offices, retail, and other uses.

The EIS is being conducted in accordance with the National Environmental Policy Act (NEPA), the implementing Army Regulation 200-2, and the provisions of the Council on Environmental Quality, 40 CFR Part 1500. The EIS identifies and determines the extent of environmental impacts and required mitigation measures.

The Draft Environmental Impact Statement was available for public review from November 29, 1991 to January 21, 1992. A public hearing was held on January 13, 1992. Questions and comments regarding the EIS should be forwarded to: Mr. Robert R. Hardiman, Program Manager, OASA (I, L&E), Building 257, Stop 388, Fort Belvoir, VA 22060-5388.

Comments should be received no later than April 26, 1993.

Lewis D. Walker,

Deputy Assistant Secretary of the Army, (Environment, Safety and Occupational Health) OASA (I, L&E).

[FR Doc. 93-6618 Filed 3-22-93; 8:45 am]

BILLING CODE 3710-08-M

Department of the Navy

Record of Decision for New Construction Dredging Projects at Naval Air Station Alameda and Naval Supply Center Oakland, CA, With Dredge Material Disposal at a Deep Ocean Disposal Site

The Department of the Navy announces its decision to select an ocean disposal site for a new construction dredging project at two Navy facilities in San Francisco Bay. This action is taken pursuant to section 102(c) of the National Environmental Policy Act (NEPA) of 1969, the Council on Environmental Quality regulations at 40 CFR parts 1500–1508, section 103(d) of the Marine Protection, Research and Sanctuaries Act (MPRSA) of 1972, and U.S. Environmental Protection Agency's (EPA) Ocean Dumping regulations (40 CFR parts 220–228). The Final Supplemental Environmental Impact Statement (FSEIS) addressing the impacts of disposal site use and the dredging project was distributed for public review on February 5, 1993. The disposal site is referred to as the Navy Ocean Disposal Site (NODS). The U.S. Army Corps of Engineers (COE) served as cooperating agency in preparation of the Supplemental EIS and will prepare its own Record of Decision/Statement of Findings.

Dredging and deepening of berths will occur at the Navy's facilities located at the Naval Air Station (NAS) Alameda and Naval Supply Center (NSC) Oakland, California. No more than 1.2 million cubic yards of sediments, determined to be suitable for ocean disposal, will be disposed at NODS about 55 miles west-southwest of the Golden Gate Bridge. The project depth for NAS Alameda is 50 feet below mean lower low water (MLLW) versus 42 feet now, and 38 or 41 feet below MLLW at NSC Oakland depending on the area to be dredged versus 35 feet now. The following table lists the approximate sediment maximum quantities covered under this ROD based on February 1993 estimates; actual quantities will depend on predredge surveys.

DREDGE SEDIMENT QUALITY PROJECTIONS:

Dredging area	Est. cu. yd. vol.
NAS Alameda 4	117,166
NAS Alameda 5	115,667
NAS Alameda 6	117,167
NAS Alameda Subtotal	350,000
NSC Oakland 2	103,431
NSC Oakland 3	50,179
NSC Oakland 4	387,282
NSC Oakland 5	54,252
NSC Oakland 6	254,856

DREDGE SEDIMENT QUALITY PROJECTIONS:—Continued

Dredging area	Est. cu. yd. vol.
NSC Oakland Subtotal	850,000
Total NAS and NSC	1,200,000

If all areas were dredged to design depth, they would total 1.6 million cubic yards. Materials determined to be unsuitable for ocean disposal (NAS–2, NSC–1, and NSC–7), a 50-foot buffer adjacent to those unsuitable areas, and material from two adjacent suitable but inaccessible areas at NAS–1 and NAS–3 will not be dredged under this permit. Though the latter two areas are suitable for ocean disposal, dredging them would disturb the intervening unsuitable area and would gain no added additional capacity for Navy vessels. The unsuitable sediments will be left in place and protected from disturbance by the 50-foot buffer. The resulting project comprises 1.2 million cubic yards, and gains some operational efficiency for Navy vessels as a stand-alone project. Further analysis of unsuitable material will be conducted under the Tier IV procedures as described in the EPA/COE testing manual title, "Evaluation of Dredged Material Proposed of Ocean Disposal," also known as the Green Book. Results of this testing and of evaluation of disposal site options for remaining material will be addressed in supplemental NEPA documentation, as discussed below under agency comments.

A Final Environmental Impact Statement (FEIS) which analyzed the impacts of new construction dredging at NAS Alameda and NSC Oakland was distributed for public review on August 24, 1990. The FEIS analyzed the impacts of new construction dredging at the Navy facilities and impacts at alternative disposal sites (in-bay, upland, and open dredge material disposal sites). The Assistant Secretary of the Navy (Installations and Environment) issued a Record of Decision (ROD) on September 25, 1990, that was published in the **Federal Register** on October 12, 1990. In the ROD, the Navy concluded that the proposed new construction dredging of 1.6 million cubic yards of sediment from NAS Alameda and NSC Oakland would not cause significant adverse effects at the dredge site or at the proposed NODS. The NODS was determined to be the only feasible disposal site for the amount of material proposed for disposal. In the ROD, the Navy committed to conduct additional site specific studies at the proposed NODS and sediment tests at the proposed dredging sites, and to document and analyze those findings in a Supplemental EIS (SEIS).

A FSEIS, written in accordance with the Navy's NEPA regulations and consistent with COE permitting process, was published to document the results of the additional studies at the NODS and sediment tests at NAS Alameda and NSC Oakland. All supplemental baseline biological, geological, and physical oceanographic studies sponsored by the Navy at the NODS continue to support the conclusions reached in the FEIS ROD issued on September 25, 1990. Use of the NODS complies with EPA's Ocean Dumping regulations which govern designation of ocean disposal sites.

Section 6 of the FSEIS summarizes the dredging and disposal operations management and monitoring plan. These measures are reflected in the MPRSA section 103 permit conditions and in the Navy's construction contract specifications. Coordination between the Navy and regulatory agencies has resulted in refinement of FSEIS section 6 to ensure adequate controls over dredging and disposal operations. The Navy will continue to work with COE San Francisco District and EPA Region IX to refine specific ocean disposal site monitoring activities before oceanographic cruises take place. Among the MPRSA conditions to which the Navy agrees are:

(1) To avoid dredging and disturbing areas NAS–1, NAS–2, NAS–3, NSC–1, NSC–7, and the 50-foot buffer around NSC–1 and NSC–7;

(2) To inspect all barges for dredge material leakage before departing from San Francisco Bay;

(3) To not load disposal barges over 80 percent of capacity for the first 25 disposal trips to reduce the possibility of spillage during transportation to the NODS while transportation experience is being gained;

(4) To reduce the volume of dredge material in a barge if waves exceed 10 feet with a wave frequency of nine seconds or less unless a wave shield is in place to prevent water from entering the barge and allowing sediment to flow into the ocean;

(5) To terminate disposal operations if wave height exceeds 18 feet;

(6) To have an independent monitor accompany the first 25 ocean disposal trips to verify that disposal operations are being conducted properly, after that the tug captain will be responsible for ensuring compliance with disposal operation conditions; and

(7) To monitor and manage accurate use of specified transportation routes to and precise disposal at the NODS using an enhanced Global Positioning System, and to provide data promptly to affected regulatory and resource agencies.

In order to verify previous sediment dispersion models, the Navy will monitor disposal operations at the mid and end points of the disposal operation. Plumes from at least seven barge loads of dredged material will be tracked and water samples will be taken at the NODS. A sediment profile camera will be used to map the dredged material footprint. Approximately 25 stations will be sampled during the two sampling cruises. Sediment profile photographs will be used to identify the thickness of dredged material deposits on the seafloor. The Navy will coordinate with the COE San Francisco District and EPA Region IX to prepare an acceptable ocean study plan before the cruises are conducted. Results of the disposal site monitoring program will be available to those agencies and organizations who would benefit from the information.

During the FSEIS 30 day no-action comment period which ended March 8, 1993, the Navy received four comment letters. Principal concerns raised included the following summarized comments; the Navy has responded separately to each comment letter.

(a) The Gulf of the Farallones National Marine Sanctuary (GFNMS) reiterated its concern that adequate disposal monitoring controls be implemented to ensure no Sanctuary impacts, and requested that supplemental bird and marine mammal surveys be conducted to assess possible changes in seabird and marine mammal use of the area. Through coordination with the GFNMS, the Navy satisfied the GFNMS concerns.

(b) The Marin Audubon Society requested additional bird and marine mammal effects monitoring and clarification on the extent of planned sediment plume tracking. The Navy agrees and will use Point Reyes Bird Observatory procedures. The COE, EPA, and Navy will monitor sediment plume dispersion as described above. Plume clouds will be tracked to a point of ambient ocean water conditions.

(c) Ocean Advocates concluded (1) that feasible upland disposal alternatives are available and should have been selected, (2) that the management and monitoring plan was insufficient, (3) that potentially significant ocean fisheries may be affected, (4) that endangered marine mammals may be affected, (5) that EPA/COE Green Book testing processes are not valid, (6) that Tier IV sediment test procedures are questionable and should undergo public review, and (7) that bioassay test evaluations, current meter deployment, and sediment dispersion modeling were not done correctly. In response, the Navy concludes that: (1) Feasible and environmentally acceptable upland disposal alternatives are not available in the San Francisco Bay area as explained in the FSEIS, though consideration will be given to using upland disposal for the second phase of the project, (2) the management and monitoring plan currently being finalized by the COE and EPA will adequately ensure that the dredge, transport, disposal, and monitoring operations are conducted correctly and that operations will cease if unacceptable operations or environmental effects occur; (3) the regulatory and resource agencies and the commercial fishermen approve of this site regarding commercial and recreational fisheries effects, and (4) they agree that there will be no effects on endangered marine mammals, as documented in the FSEIS, (5) the EPA/COE Green Book is nationally accepted as the state of the art procedural guidance, and those agencies responsible for its implementation on this project have concluded that its procedures and their conclusions were handled correctly; (6) Tier IV testing would be done using protocols being developed with the EPA and COE, and proposed dredging and disposal of remaining sediments will be subject to public review before decisions are made; and (7) the regulatory and resource agencies, as well as the Navy, conclude that test evaluations, current meter deployment, and dispersion modeling were done correctly.

(d) The Environmental Protection Agency Region IX concurred with the adequacy of the FSEIS, the suitability of the proposed clean dredge sediment (1.2 million cubic yards), and the acceptability of the proposed disposal site. EPA requested that finalization of the dredge and disposal management and monitoring plan (FSEIS section 6) be coordinated among the EPA, COE, and the Navy. The Navy has been and will continue to coordinate the plan. EPA requested that the recently refined dredge quantity projections be published as an attachment to this ROD; they are shown above. EPA stated that a SEIS with full alternatives evaluation is the appropriate type of NEPA documentation to evaluate Tier IV testing and disposal options for the remaining sediments. The Navy acknowledges the potential need for alternatives analysis and an SEIS in the event of possible significant affects, but will leave the option open in the event that retesting results and/or future approved upland disposal alternatives exist such that an Environmental Assessment with formal public review would suffice.

The Navy has concluded that the dredging and disposal action are not likely to result in significant adverse impacts, and that the ocean site is the only feasible disposal site for this project.

Dated: March 17, 1993.

Elsie Munsell,

Deputy Assistant Secretary of the Navy (Environment and Safety).

Dated: March 18, 1993.

Michael P. Rummel,

LCDR, JAGC, USN, Federal Register Liaison Officer.

[FR Doc. 93-6619 Filed 3-22-93; 8:45 am]

BILLING CODE 3810-AE-U

DEPARTMENT OF DEFENSE

GENERAL SERVICES ADMINISTRATION

NATIONAL AERONAUTICS AND SPACE ADMINISTRATION

[OMB Control No. 9000-0068]

Clearance Request for Economic Price Adjustment

AGENCIES: Department of Defense (DOD), General Services Administration (GSA), and National Aeronautics and Space Administration (NASA).

ACTION: Notice of request for an extension to an existing OMB clearance (9000-0068).

SUMMARY: Under the provisions of the Paperwork Reduction Act of 1980 (44 U.S.C. 3501), the Federal Acquisition Regulation (FAR) Secretariat has submitted to the Office of Management and Budget (OMB) a request to review and approve an extension of a currently approved information collection requirement concerning Economic Price Adjustment.

FOR FURTHER INFORMATION CONTACT: Beverly Fayson, Office of Federal Acquisition Policy, GSA (202) 501-4755.

SUPPLEMENTARY INFORMATION:

A. Purpose

A fixed-price contract with economic price adjustment provides for upward and downward revision of the stated contract price upon occurrence of specified contingencies. In order for the

contracting officer to be aware of price changes, the firm must provide pertinent information to the Government. The information is used to determine the proper amount of price adjustments required under the contract.

B. Annual Reporting Burden

The annual reporting burden is estimated as follows: Respondents, *7,200*; responses per respondent, *1*; total annual responses, *7,200*; preparation hours per response, *.25*; and total response burden hours, *1,800*.

OBTAINING COPIES OF PROPOSALS: Requester may obtain copies of OMB applications or justifications from the General Services Administration, FAR Secretariat (VRS), room 4037, Washington, DC 20405, telephone (202) 501–4755. Please cite OMB Control No. 9000–0068, Economic Price Adjustment, in all correspondence.

Dated: March 15, 1993.

Beverly Fayson,

FAR Secretariat.

[FR Doc. 93–6573 Filed 3–22–93; 8:45 am]

BILLING CODE 6820–34–M

[OMB Control No. 9000–0071]

Clearance Request for Price Redetermination

AGENCIES: Department of Defense (DOD), General Services Administration (GSA), and National Aeronautics and Space Administration (NASA).

ACTION: Notice of request for an extension to an existing OMB clearance (9000–0071).

SUMMARY: Under the provisions of the Paperwork Reduction Act of 1980 (44 U.S.C. 3501), the Federal Acquisition Regulation (FAR) Secretariat has submitted to the Office of Management and Budget (OMB) a request to review and approve an extension of a currently approved information collection requirement concerning Price Redetermination.

FOR FURTHER INFORMATION CONTACT: Beverly Fayson, Office of Federal Acquisition Policy, GSA (202) 501–4755.

SUPPLEMENTARY INFORMATION:

A. Purpose

Fixed-price contracts with prospective price redetermination provide for firm fixed prices for an initial period of the contract with prospective redetermination at stated times during performance. Fixed price contracts with retroactive price redetermination provide for a fixed ceiling price and retroactive price redetermination within the ceiling after completion of the contract. In order for the amounts of price adjustments to be determined, the firms performing under these contracts must provide information to the Government regarding their expenditures and anticipated costs. The information is used to establish fair price adjustments to Federal contracts.

B. Annual Reporting Burden

The annual reporting burden is estimated as follows: Respondents, *3,500*; responses per respondent, *2*; total annual responses, *7,000*; preparation hours per response, *1*; and total response burden hours, *7,000*.

OBTAINING COPIES OF PROPOSALS: Requester may obtain copies of OMB applications or justifications from the General Services Administration, FAR Secretariat (VRS), room 4037, Washington, DC 20405, telephone (202) 501–4755. Please cite OMB Control No. 9000–0071, Price Redetermination, in all correspondence.

Dated: March 15, 1993.

Beverly Fayson,

FAR Secretariat.

[FR Doc. 93–6574 Filed 3–22–93; 8:45 am]

BILLING CODE 6820–34–M

DEPARTMENT OF EDUCATION

Proposed Information Collection Requests

AGENCY: Department of Education.

ACTION: Notice of proposed information collection requests.

SUMMARY: The Director, Information Resources Management Service, invites comments on the proposed information collection requests as required by the Paperwork Reduction Act of 1980.

DATES: Interested persons are invited to submit comments on or before April 22, 1993.

ADDRESSES: Written comments should be addressed to the Office of Information and Regulatory Affairs, Attention: Dan Chenok: Desk Officer, Department of Education, Office of Management and Budget, 726 Jackson Place, NW., room 3208, New Executive Office Building, Washington, DC 20503. Requests for copies of the proposed information collection requests should be addressed to Cary Green, Department of Education, 400 Maryland Avenue, SW., room 5624, Regional Office Building 3, Washington, DC 20202–4651.

FOR FURTHER INFORMATION CONTACT: Cary Green (202) 708–5174. Individuals who are hearing impaired may call the Federal Dual Party Relay Service at 1–800–877–8339 (in the Washington, DC 202 area code, telephone 708–9300) between 8 a.m. and 7 p.m., Eastern time.

SUPPLEMENTARY INFORMATION: Section 3517 of the Paperwork Reduction Act of 1980 (44 U.S.C. chapter 35) requires that the Office of Management and Budget (OMB) provide interested Federal agencies and the public an early opportunity to comment on information collection requests. OMB may amend or waive the requirement for public consultation to the extend that public participation in the approval process would defeat the purpose of the information collection, violate State or Federal law, or substantially interfere with any agency's ability to perform its statutory obligations. The Director of the Information Resources Management Service, publishes this notice containing proposed information collection requests prior to submission of these requests to OMB. Each proposed information collection, grouped by office, contains the following: (1) Type of review requested, e.g., new, revision, extension, existing or reinstatement; (2) Title; (3) Frequency of collection; (4) The affected public; (5) Reporting burden; and/or (6) Recordkeeping burden; and (7) Abstract. OMB invites public comment at the address specified above. Copies of the requests are available from Cary Green at the address specified above.

Dated: March 17, 1993.

Cary Green,

Director, Information Resources Management Service.

Office of Elementary and Secondary Education

Type of Review: Revision.
Title: Application for Grants for Desegregation Assistance Center, New and Continuation.
Frequency: Annually.
Affected Public: Non-profit institutions.
Reporting Burden:
Responses: 40
Burden Hours: 1540
Recordkeeping Burden:
Recordkeepers: 0
Burden Hours: 0

Abstract: The application is used by non-profit organizations to apply for desegregation assistance center awards under Title IV of the Civil Rights Act of 1964. The Department uses this information to evaluate the proposed projects and make awards in accordance with program regulations.

Office of Postsecondary Education

Type of Review: Revision.

Title: Application for the College Facilities Loan Program.

Frequency: Annually.

Affected Public: Non-public institutions.

Reporting Burden:

Responses: 200

Burden Hours: 1,070

Recordkeeping Burden:

Recordkeepers: 0

Burden Hours: 0

Abstract: Application is needed for eligible applicants to apply for loan funds authorized under Title VII, Part C of the Higher Education Act as amended. Application information is used to evaluate proposals and obligate loan funds. Respondents are institutions of higher education.

[FR Doc. 93-6565 Filed 3-22-93; 8:45 am]

BILLING CODE 4000-01-M

National Assessment Governing Board; Meeting

AGENCY: National Assessment Governing Board; Education.

ACTION: Notice of teleconference meeting.

SUMMARY: This notice sets forth the schedule and proposed agenda of a forthcoming meeting of the Executive Committee of the National Assessment Governing Board. This notice also describes the functions of the Board. Notice of this meeting is required under section 10 (a) (2) of the Federal Advisory Committee Act. This document is intended to notify the general public of their opportunity to attend.

DATES: April 7, 1993.

TIME: 11 a.m. (ET).

LOCATION: 800 North Capitol Street, NW., suite 825, Washington, DC.

FOR FURTHER INFORMATION CONTACT: Mary Ann Wilmer, Operations Officer, National Assessment Governing Board, suite 825, 800 North Capitol Street, NW., Washington, DC 20002-4233, Telephone: (202) 357-6938.

SUPPLEMENTARY INFORMATION: The National Assessment Governing Board is established under section 406(i) of the General Education Provisions Act (GEPA) as amended by section 3403 of the National Assessment of Educational Progress Improvement Act (NAEP Improvement Act), title III-C of the Augustus F. Hawkins-Robert T. Stafford Elementary and Secondary School Improvement Amendments of 1988 (Pub. L. 100-297), (20 U.S.C. 1221e-1).

The Board is established to formulate policy guidelines for the National Assessment of Educational Progress. The Board is responsible for selecting subject areas to be assessed, developing assessment objectives, identifying appropriate achievement goals for each grade and subject tested, and establishing standards and procedures for interstate and national comparisons.

The Executive Committee of the National Assessment Governing Board will meet April 7, 1993 from 11 a.m. until 12:30 p.m. to review and approve the agenda for the May 13-15, 1993 meeting of the Board. Because this is a teleconference meeting, facilities will be provided so the public will have access to the Committee's deliberations.

Records are kept of all Board proceedings and are available for public inspection at the U.S. Department of Education, National Assessment Governing Board, suite 825, 800 North Capitol Street, NW., Washington, DC, from 8:30 a.m. to 5 p.m.

Dated: March 17, 1993.

Roy Truby,

Executive Director, National Assessment Governing Board.

[FR Doc. 93-6532 Filed 3-22-93; 8:45 am]

BILLING CODE 4000-01-M

Office of Postsecondary Education

[CFDA Nos. 84.055A, 84.055B, 84.055C, and 84.055D]

Cooperative Education Program (Administrative, Demonstration, Research and Training and Resource Center Projects)

AGENCY: Department of Education.

ACTION: Notice of Technical Assistance Workshops for the Cooperative Education Program.

SUMMARY: The Acting Assistant Secretary for Postsecondary Education of the U.S. Department of Education will sponsor three Technical Assistance Workshops for colleges, universities, and public or private nonprofit agencies or organizations interested in applying for Cooperative Education grants for Administration, Demonstration, Research, and Training and Resource Center projects. These workshops will be conducted by representatives of the Division of Higher Education Incentive Programs and will cover the revised Title VIII statute and regulations governing Cooperative Education Program applications for new projects, application selection criteria, project budgets, and grant management and accountability issues. The sessions will be helpful to those applying for funding for new Administration, Demonstration, Research, and Training and Resource Center projects, as well as to current grantees.

DATES, TIMES, AND PLACES: The technical assistance workshops are scheduled as follows:

First Workshop

Date: March 24-25, 1993.

Time: 9 a.m. to 4 p.m., first day. 9 a.m. to 12 noon, second day.

Place: Newport Marriott Hotel, 25 America's Cup Avenue, Newport, RI 02840, telephone: (401) 849-1000, 1-800-458-3066 (outside Rhode Island).

Second Workshop

Date: April 19-20, 1993.

Time: 9 a.m. to 4 p.m., first day. 9 a.m. to 12 noon, second day.

Place: Catamaran Hotel, 3999 Mission Boulevard, San Diego, CA 92109, telephone: (619) 488-1081.

Third Workshop

Date: May 3-4, 1993.

Time: 9 a.m. to 4 p.m., first day. 9 a.m. to 12 noon, second day.

Place: Holiday Inn Crowne Plaza Hotel, 250 North Main Street, Memphis, TN 38103-1624, telephone: (901) 527-7300.

FOR FURTHER INFORMATION CONTACT: Ms. Vicki Payne or Dr. John E. Bonas, U.S. Department of Education, Division of Higher Education Incentive Programs, 400 Maryland Avenue, SW., Washington, DC 20202-5251. Their respective telephone numbers are (202) 708-8405 and (202) 708-9407. Individuals who are hearing impaired may call the Federal Dual Party Relay Service at 1-800-877-8339 (in the Washington, DC 202 area code, telephone 708-9300) between 8 a.m. and 7 p.m., Eastern time.

The workshops are free, but because of limited space, prospective participants for the April and May workshops must submit requests for registration forms in writing to the program officials listed in the preceding paragraph. However, you may request registration forms for the first workshop on March 24-25, 1993 by telephoning the Department of Education contact persons. You will need a registration form to be admitted to the workshop.

Program Authority: 20 U.S.C. 1133-1133c.

Dated: March 17, 1993.

Maureen A. McLaughlin,

Acting Assistant Secretary for Postsecondary Education.

[FR Doc. 93-6566 Filed 3-22-93; 8:45 am]

BILLING CODE 4000-01-U

DEPARTMENT OF ENERGY

Office of Conservation and Renewable Energy

NICE³ Pollution Prevention Grants

AGENCY: The Department of Energy (DOE) and the Environmental Protection Agency (EPA).

ACTION: Notice of Eligibility; Clarification.

SUMMARY: The DOE published a Notice concerning NICE³ Pollution Prevention Grants on November 6, 1992 (57 FR 53100). This notice is to clarify the goals of the NICE³ Program and applicant eligibility. The Office of Waste Reduction of the Department of Energy and the Pollution Prevention Division of the Environmental Protection Agency are jointly managing a State Grant Program entitled National Industrial Competitiveness through Efficiency, Energy, Environment and Economics (NICE³). The goals of the NICE³ Program are (1) to foster new industrial processes and/or equipment that can significantly reduce the generation of wastes in industry, improve energy efficiency and enhance the competitiveness of U.S. industry, (2) to encourage collaborative efforts among State agencies responsible for energy, environment and economic issues together with private sector industrial partners.

DATES: Applications must be received by April 30, 1993.

FOR FURTHER INFORMATION CONTACT: Technial Inquiry Service at National Renewable Energy Laboratory (NREL), 1617 Cole Boulevard, Golden, Colorado 80401—Telephone 303–231–7303—for referral to appropriate DOE Support Office.

SUPPLEMENTARY INFORMATION: NICE³ was created in 1991 as a pilot program for seven States (New York and New Jersey in Region II, Illinois and Ohio in Region V, Texas and Louisiana in Region VI and California in Region IX) to advance competitiveness through pollution prevention while conserving energy. Initial funding was $600,000, with DOE and EPA providing an equal amount of funds. The DOE Office of Waste Reduction and the EPA Office of Pollution Prevention were the two contributors. In 1991, three projects were funded in Ohio, Texas and New York.

The NICE³ Program continued as a pilot in the same four regions in 1992. $700,000 each was contributed by DOE and EPA for a total of $1.4 million. Six projects have been funded: three in Ohio, two in California and one in New Jersey.

Availability of FY 93 Funds. With this publication, DOE and EPA announcing the availability of up to $2.5 million in grant/cooperative agreement funds for fiscal year 1993. This third round of awards will be made through a competitive process. Size of the grants may range up to $400,000 and projects may cover a period of up to 3 years.

Restricted Eligibility: Eligible applicants for purposes of funding under this program include the 50 States, the District of Columbia, the U.S. Virgin Islands, the Commonwealth of Puerto Rico, any territory or possession of the United States, specifically, State energy, environmental or economic agencies. For convenience, the term State in this notice refers to all eligible applicants. Local governments, State and private universities, private non-profits, private businesses, and individuals are not eligible. These organizations are encouraged to work with eligible applicants in developing proposals that include them as participants in the projects. DOE and EPA strongly encourage this type of cooperative arrangement in support of program goals.

The Catalogue of Federal Domestic Assistance number assigned to this program is 81.105. The $2.5 million in Federal funds are provided by DOE and EPA. Cost sharing is required by all participants. The Federal Government will provide up to 50% of the funds for the Project. The remaining funds must be provided by the eligible applicants and/or cooperating project participants. Cost-sharing beyond the 50 percent match is desirable. In addition to direct financial contributions, cost-sharing can include beneficial services or items, such as manpower, equipment, consultants, and computer time that are allowable in accordance with applicable cost principles. Industrial partners are required for a proposal to be considered responsive to this announcement and eligible for grant consideration. State involvement is required for a proposal to be responsive.

Eligible Activities: DOE and EPA seek projects that will encourage accelerated industrial development and dissemination of pollution reduction and energy conserving technologies, demonstrate successful industrial applications of innovative waste reduction techniques in conjunction with less polluting, energy-efficient technologies, and enhance industrial competitiveness through the introduction of cost effective waste reduction and energy efficient practices.

Evaluation Criteria: All proposals submitted under this Notice will be evaluated according to the conditions and specifications set forth in this solicitation.

Review Process: The first tier evaluation will be at the appropriate regional DOE Support Office. Proposals will receive a final review by a panel comprised of members representing DOE's Office of Conservation and Renewable Energy, the Environmental Protection Agency, and DOE and EPA field offices. More detailed information is available from NREL. (See telephone number above.)

DOE/EPA reserves the right to fund, in whole or in part, any, all, or none of the proposals submitted in response to this notice.

Robert L. San Martin,

Acting Assistant Secretary, Conservation and Renewable Energy.

[FR Doc. 93–6616 Filed 3–22–93; 8:45 am]

BILLING CODE 6450–01–M

Office of Fossil Energy

[FE Docket No. 93–23–NG]

Petro-Canada Hydrocarbons Inc., Order Granting Blanket Authorization to Export Natural Gas to Canada

AGENCY: Office of Fossil Energy, DOE.

ACTION: Notice of order.

SUMMARY: The Office of Fossil Energy of the Department of Energy gives notice that it has issued an order granting Petro-Canada Hydrocarbons Inc. authorization to export to Canada up to 150 Bcf of natural gas over a two-year term, beginning on the date of first delivery.

This order is available for inspection and copying in the Office of Fuels Programs Docket Room, 3F–056, Forrestal Building, 1000 Independence Avenue, SW., Washington, DC 20585, (202) 586–9478. The docket room is open between the hours of 8 a.m. and 4:30 p.m., Monday through Friday, except Federal holidays.

Issued in Washington, DC, March 12, 1993.

Anthony J. Como,

Acting Deputy Assistant Secretary for Fuels Programs, Office of Fossil Energy.

[FR Doc. 93–6614 Filed 3–22–93; 8:45 am]

BILLING CODE 6450–01–M

Federal Energy Regulatory Commission

[Docket No. TA93-1-31-001]

Arkla Energy Resources Company; Revised Annual PGA Filing

March 16, 1993.

Take notice that on March 11, 1993, Arkla Energy Resources Company (AER), a subsidiary of Arkla, Inc., tendered for filing six copies of the following revised tariff sheet to become effective April 1, 1993:

Rate Schedule No. X-26

Original Volume No. 3
Twenty-Second Revised Sheet No. 185.1

AER states that this tariff sheet is being refiled in AER's Annual PGA Filing to reflect a payment of $116,163 for prior period accruals received by AER from Williams Natural Gas Company which was inadvertently recorded as take-or-pay reimbursement at the time it was received.

Any person desiring to protest said filing should file a protest with the Federal Energy Regulatory Commission, 825 North Capitol Street, NE., Washington, DC 20426, in accordance with rule 211 of the Commission's Rules of Practice and Procedure 18 CFR 385.211. All such protests should be filed on or before March 23, 1993. Protests will be considered by the Commission in determining the appropriate action to be taken, but will not serve to make protestants parties to the proceeding. Copies of this filing are on file with the Commission and are available for public inspection.

Lois D. Cashell,

Secretary.

[FR Doc. 93-6582 Filed 3-22-93; 8:45 am]

BILLING CODE 6717-01-M

[Docket No. RP93-90-001]

CNG Transmission Corporation; Proposed Changes in FERC Gas Tariff

March 16, 1993.

Take notice that CNG Transmission Corporation ("CNG"), on March 11, 1993, filed the following tariff sheet for inclusion in its FERC Gas Tariff, First Revised Volume No. 1:

Original Sheet No. 234-A

CNG requests an April 1, 1993, effective date.

The purpose of the tariff revision is to correct the pagination of a tariff sheet filed on March 1, 1993, in this proceeding.

CNG states that copies of this filing are being served upon CNG's customers as well as interested state commissions.

Any person desiring to protest said filing should file a protest with the Federal Energy Regulatory Commission, 825 North Capitol Street, NE., Washington, DC 20426, in accordance with Rule 211 of the Commission's Rules of Practice and Procedure 18 CFR 385.211. All such protests should be filed on or before March 23, 1993. Protests will be considered by the Commission in determining the appropriate action to be taken, but will not serve to make protestants parties to the proceeding. Copies of this filing are on file with the Commission and are available for public inspection.

Lois D. Cashell,

Secretary.

[FR Doc. 93-6580 Filed 3-22-93; 8:45 am]

BILLING CODE 6717-01-M

[Docket No. EG93-32-000]

South Brunswick CoGen, L.P.; Application for Commission Determination of Exempt Wholesale Generator Status

March 17, 1993.

On March 11, 1993, South Brunswick CoGen, L.P. ("SBC"), a Delaware limited partnership, filed with the Federal Energy Regulatory Commission an application for determination of exempt wholesale generator status pursuant to part 365 of the Commission's regulations. SBC is a Delaware limited partnership, whose sole general partner is South Brunswick CoGen (I), Inc., a wholly-owned subsidiary of Air Products & Chemicals, Inc. Air Products is the owner of the entire limited partnership interest in SBC. SBC will own a 120-170 MW (maximum net power production capacity) eligible facility located in Middlesex County, New Jersey. All electric power net of the facility's operating electric power will be purchased at wholesale by a New Jersey public utility.

Any person desiring to be heard concerning the application for exempt wholesale generator status should file a motion to intervene or comments with the Federal Energy Regulatory Commission, 825 North Capitol Street, NE., Washington, DC 20426, in accordance with §§ 385.211 and 385.214 of the Commission's Rules of Practice and Procedure. The Commission will limit its consideration of comments to those that concern the adequacy or accuracy of the application. All such motions and comments should be filed on or before April 5, 1993 and must be served on the applicant. Any person wishing to become a party must file a motion to intervene. Copies of this filing are on file with the Commission and are available for public inspection.

Lois D. Cashell,

Secretary.

[FR Doc. 93-6584 Filed 3-22-93; 8:45 am]

BILLING CODE 6717-01-M

[Docket No. TM93-12-29-000]

Transcontinental Gas Pipe Line Corporation; Proposed Changes in FERC Gas Tariff

March 16, 1993.

Take notice that Transcontinental Gas Pipe Line Corporation (TGPL) tendered for filing on March 12, 1993 certain revised tariff sheets to Third Revised Volume No. 1 to its FERC Gas Tariff included in appendix A attached to the filing.

TGPL states that the purpose of the instant filing is to track a rate change attributable to the storage service purchased from Texas Eastern Transmission Corporation (TETCO) under its Rate Schedule X-28 the costs of which are included in the rates and charges payable under TGPL's Rate Schedule S-2. The tracking filing is being made pursuant to Section 26 of the General Terms and Conditions of Volume No. 1 of TGPL's FERC Gas Tariff.

Included in Appendix B attached to the filing is the explanation of the rate change and details regarding the computation of the revised S-2 rates.

Also included therein for filing is a revised tariff sheet which incorporates the Rate Schedule S-2 rate change proposed therein into a subsequent intervening rate filing which is currently pending Commission acceptance on the effective date reflected thereon.

TGPL states that copies of the filing are being mailed to each of its S-2 customers and interested State Commissions.

Any person desiring to be heard or to protest said filing should file a motion to intervene or protest with the Federal Energy Regulatory Commission, 825 North Capitol Street, NE., Washington, DC 20426, in accordance with 385.214 and 385.211 of the Commission's Rules and Regulations. All such motions or protests should be filed on or before March 23, 1993. Protests will be considered by the Commission in determining the appropriate action to be taken, but will not serve to make protestants parties to the proceeding. Any person wishing to become a party must file a motion to intervene. Copies of this filing are on file with the Commission and are available for public

inspection in the Public Reference Room.

Lois D. Cashell,

Secretary.

[FR Doc. 93-6581 Filed 3-22-93; 8:45 am]

BILLING CODE 6717-01-M

[Docket No. RP92-137-000 (Phase II)]

Transcontinental Gas Pipe Line Corporation; Informal Settlement Conference

March 17, 1993.

Take notice that an informal settlement conference will be convened in this proceeding on March 26, 1993, at 10 a.m., at the offices of the Federal Energy Regulatory Commission, 810 First Street, NE., Washington, DC.

Any party, as defined by 18 CFR 385.102(c), or any participant as defined by 18 CFR 385.102(b), is invited to attend. Persons wishing to become a party must move to intervene and receive intervenor status pursuant to the Commission's regulations (18 CFR 385.214).

For additional information, contact Donald A. Heydt at (202) 208-0740, Joanne Leveque at (202) 208-5705, or Lorna J. Hadlock at (202) 208-0737.

Lois D. Cashell,

Secretary.

[FR Doc. 93-6583 Filed 3-22-93; 8:45 am]

BILLING CODE 6717-01-M

ENVIRONMENTAL PROTECTION AGENCY

[OPPTS-59960; FRL-4574-3]

Certain Chemicals; Premanufacture Notices

AGENCY: Environmental Protection Agency (EPA).

ACTION: Notice.

SUMMARY: Section 5(a)(1) of the Toxic Substances Control Act (TSCA) requires any person who intends to manufacture or import a new chemical substance to submit a premanufacture notice (PMN) to EPA at least 90 days before manufacture or import commences. Statutory requirements for section 5(a)(1) premanufacture notices are discussed in the final rule published in the **Federal Register** of May 13, 1983 (48 FR 21722). In the **Federal Register** of November 11, 1984, (49 FR 46066) (40 CFR 723.250), EPA published a rule which granted a limited exemption from certain PMN requirements for certain types of polymers. Notices for such polymers are reviewed by EPA within 21 days of receipt. This notice announces receipt of 8 such PMN(s) and provides a summary of each.

DATES: Close of review periods:

Y 93-50, 93-51, 93-52, 93-53, February 23, 1993.

Y 93-54, February 24, 1993.

Y 93-55, 93-56, 93-57, March 3, 1993.

FOR FURTHER INFORMATION CONTACT: Susan B. Hazen, Director, Environmental Assistance Division (TS-799), Office of Pollution Prevention and Toxics, Environmental Protection Agency, rm. E-545, 401 M St., SW., Washington, DC 20460, (202) 554-1404, TDD (202) 554-0551.

SUPPLEMENTARY INFORMATION: The following notice contains information extracted from the nonconfidential version of the submission provided by the manufacturer on the PMNs received by EPA. The complete nonconfidential document is available in the TSCA Public Docket Office, ETG-102 at the above address between 8 a.m. and noon and 1 p.m. and 4 p.m., Monday through Friday, excluding legal holidays.

Y 93-50

Manufacturer. Confidential.

Chemical. (G) Acrylate polymer.

Use/Import. (G) Coatings for open, nondispersive use in original manufacture. Prod. range: Confidential.

Y 93-51

Manufacturer. Confidential.

Chemical. (G) Styrene-acrylic copolymer.

Use/Import. (G) A component used in coating for plastics. Prod. range: Confidential.

Y 93-52

Importer. Mitsui Petrochemical (America), LTD.

Chemical. (G) Dimethylcarbonate, polymer with poly (oxyalkylene) monomethyl ether.

Use/Import. (G) A component of a lubricating oil. Import range: Confidential.

Toxicity Data. Acute oral: LD50 > 2,000 mg/kg (rat). Static acute: LC50 96h > 10 mg/l (rainbow trout). Eye irritation: none (rabbit). Skin irritation: none (rabbit).

Y 93-53

Importer. Mitsui Petrochemical (America), Ltd.

Chemical. (G) Sorbitol hexakis(poly(oxyalkylene)ether(terminal OH), polymer with bis(2-(2-methoxy-1-propoxy)-1-alkyl)carbonate.

Use/Import. (G) A component of a lubricating oil. Import range: Confidential.

Toxicity Data. Acute oral: LD50 > 2,000 mg/kg (rat). Acute dermal: LD50 > 2,000 mg/kg (rabbit). Acute static : LC50 96h > 4.0 mg/l (Rainbow trout).

Y 93-54

Manufacturer. Confidential.

Chemical. (G) Fatty acids, polymer with pentaerythritol, trimethylolpropane and aromatic acids.

Use/Production. (G) Coatings binder. Prod. range: Confidential.

Y 93-55

Manufacturer. Rhone-Poulenc, Inc.

Chemical. (G) Polymer of modified bisphenol A and aliphatic anhydrides.

Use/Production. (G) Fiber sizing agent. Prod. range: Confidential.

Y 93-56

Manufacturer. Confidential.

Chemical. (G) Oil tree isophthalic polymer.

Use/Production. (G) Printing ink resin. Prod. range: Confidential.

Y 93-57

Manufacturer. Confidential.

Chemical. (G) Oil tree isophthalic polyester.

Use/Production. (G) Printing ink resin. Prod. range: Confidential.

Dated: March 11, 1993.

Frank V. Caesar,

Acting Director, Information Management Division, Office of Pollution Prevention and Toxics.

[FR Doc. 93-6606 Filed 3-22-93, 8:45 am]

BILLING CODE 6560-50-F

[OPPTS-51816; FRL-4574-4]

Certain Chemicals; Premanufacture Notices

AGENCY: Environmental Protection Agency (EPA).

ACTION: Notice.

SUMMARY: Section 5(a)(1) of the Toxic Substances Control Act (TSCA) requires any person who intends to manufacture or import a new chemical substance to submit a premanufacture notice (PMN) to EPA at least 90 days before manufacture or import commences. Statutory requirements for section 5(a)(1) premanufacture notices are discussed in the final rule published in the **Federal Register** of May 13, 1983 (48 FR 21722). This notice announces receipt of 71 such PMNs and provides a summary of each.

DATES: Close of review periods:

P 93-494, 93-495, April 28, 1993.
P 93-496, 93-497, May 1, 1993.
P 93-498, April 3, 1993.
P 93-499, 93-500, 93-501, 93-502, 93-503, May 1, 1993.
P 93-504, 93-505, 93-506, 93-507, May 2, 1993.
P 93-508, 93-509, 93-510, 93-511, 93-512, 93-513, 93-514, 93-515, 93-516, May 3, 1993
P 93-517, 93-518, 93-519, 93-520, 93-521, 93-522, 93-523, 93-524, 93-525, 93-526, 93-527, 93-528, 93-529, 93-530, 93-531, May 4, 1993.
P 93-532, 93-533, May 5, 1993.
P 93-534, 93-535, 93-536, 93-537, 93-538, 93-539, 93-540, 93-541, May 8, 1993.
P 93-542, 93-543, 93-544, May 9, 1993.
P 93-545, 93-546, 93-547, 93-548, 93-549, May 10, 1993.
P 93-550, 93-551, 93-552, 93-553, 93-554, May 11, 1993.
P 93-555, 93-556, 93-557, 93-558, 93-559, 93-560, 93-561, 93-562, 93-563, 93-564, May 12, 1993.

Written comments by:

P 93-494, 93-495, March 29, 1993.
P 93-496, 93-497, April 1, 1993.
P 93-498, March 4, 1993.
P 93-499, 93-500, 93-501, 93-502, 93-503, April 1, 1993.
P 93-504, 93-505, 93-506, 93-507, April 2, 1993.
P 93-508, 93-509, 93-510, 93-511, 93-512, 93-513, 93-514, 93-515, 93-516, April 3, 1993.
P 93-517, 93-518, 93-519, 93-520, 93-521, 93-522, 93-523, 93-524, 93-525, 93-526, 93-527, 93-528, 93-529, 93-530, 93-531, April 4, 1993.
P 93-532, 93-533, April 5, 1993.
P 93-534, 93-535, 93-536, 93-537, 93-538, 93-539, 93-540, 93-541, April 8, 1993.
P 93-542, 93-543, 93-544, April 9, 1993.
P 93-545, 93-546, 93-547, 93-548, 93-549, April 10, 1993.
P 93-550, 93-551, 93-552, 93-553, 93-554, April 11, 1993.
P 93-555, 93-556, 93-557, 93-558, 93-559, 93-560, 93-561, 93-562, 93-563, 93-564, April 12, 1993.

ADDRESSES: Written comments, identified by the document control number "[OPPTS-51816]" and the specific number should be sent to: Document Processing Center (TS-790), Office of Pollution Prevention and Toxics, Environmental Protection Agency, 401 M St., SW., rm. 201ET, Washington, DC 20460, (202) 260-3532.

FOR FURTHER INFORMATION CONTACT: Susan B. Hazen, Director, Environmental Assistance Division (TS-799), Office of Pollution Prevention and Toxics, Environmental Protection Agency, rm. E-545, 401 M St., SW., Washington, DC 20460, (202) 554-1404, TDD (202) 554-0551.

SUPPLEMENTARY INFORMATION: The following notice contains information extracted from the nonconfidential version of the submission provided by the manufacturer on the PMNs received by EPA. The complete nonconfidential document is available in the TSCA Public Docket Office, ETG-102 at the above address between 8 a.m. and noon and 1 p.m. and 4 p.m., Monday through Friday, excluding legal holidays.

P 93-494

Manufacturer. Bedoukian Research, Inc.
Chemical. (S) 1,6,10,14-Hexadecatetraen-3,1-ol, 3,7,11,15-tetramethyl-(mixed isomers.
Use/Production. (S) Fragrance perfume, soap detergents, air fresheners, and scented paper. Prod. range: Confidential.

P 93-495

Manufacturer. Ciba-Geigy Corporation.
Chemical. (S) Bis(2,6-dimethoxybenzoly)-2,4,4-trimethylpentylpentylphosphine oxide.
Use/Production. (S) Photoinitiator for coating, including printing plates. Prod. range: Confidential.
Toxicity Data. Acute oral: LD50 > 2,000 mg/kg (rat). Acute dermal: LD50 > 2,000 mg/kg (rat). Eye irritation: none (rabbit). Mutagenicity: positive. Acute static: LC50 21.3 mg/l (zebra fish). Skin irritation: negligible (rabbit). Skin sensitization: positive (guinea pig).

P 93-496

Importer. Reichhold Chemicals, Inc.
Chemical. (G) Acrylic copolymer.
Use/Import. (G) Acrylic copolymer for coatings. Import range: Confidential.

P 93-497

Importer. BASF Corporation.
Chemical. (G) Amine ethanol-ethylene oxide-propylene oxide polymer.
Use/Import. (G) Pigment dispersant. Import range: Confidential.

P 93-498

Manufacturer. Confidential.
Chemical. (G) Polyester polyurethane acrylate.
Use/Production. (S) Resin for UV curable coatings, inks, and adhesives. Prod. range: Confidential.

P 93-499

Importer. Marubeni America Corporation.
Chemical. (G) Boro complex.
Use/Import. (S) Additive to toners. Import range: 1,200-4,800 kg/yr.
Toxicity Data. Acute oral: LD50 > 2,000 mg/kg (rat). Acute dermal: LD50 > 2,000 mg/kg (rat). Eye irritation: none (rabbit).Skin irritation: slight (rabbit). Skin sensitization: negative (guinea pig).

P 93-500

Manufacturer. BASF Corporation.
Chemical. (S) Cyclic poly(oxy-1,4-butanedily).
Use/Production. (S) Intermediate used for produce. Prod. range: Confidential.

P 93-501

Manufacturer. E.I. Du Pont De Nemours & Company, Inc.
Chemical. (G) Ethylene copolymer.
Use/Production. (G) Adhesive; open, nondispersive use. Prod. range: Confidential.

P 93-502

Manufacturer. E.I. Du Pont De Nemours & Company, Inc.
Chemical. (G) Silane grafted ethylene based polymer.
Use/Production. (G) Sealant-open, nondispersive use. Prod. range: Confidential.

P 93-503

Manufacturer. E.I. Du Pont De Nemours & Company, Inc.
Chemical. (G) Silane grafted ethylene based polymer.
Use/Production. (G) Sealant-open, nondispersive use. Prod. range: Confidential.

P 93-504

Manufacturer. Dow Corning Corporation.
Chemical. (G) Organo functional polydimethylsiloxane.
Use/Production. (S) Silicone textile/paper treatment. Prod. range: Confidential.
Toxicity Data. Acute oral: LD50 > 5,000 mg/kg (rat). Eye irritation: strong (rabbit). Skin irritation: moderate (rabbit).

P 93-505

Manufacturer. Confidential.
Chemical. (G) Polyisocyanate.
Use/Production. (G) Coatings, for open, nondispersive use in original equipment manufacture. Prod. range: Confidential.

P 93-506

Manufacturer. Confidential.
Chemical. (G) Polyester urethane.
Use/Production. (G) Coatings, for open, nondispersive use in original equipment manufacture. Prod. range: Confidential.

P 93-507

Manufacturer. The Dow Chemical Company.

Chemical. (G) Modified propylene glycol ether.

Use/Production. (S) Industrial cleaning formulation solvent in specialty industrial coatings. Prod. range: Confidential.

Toxicity Data. Acute oral: LD50 > 2,000 mg/kg (rat). Acute dermal: LD50 > 2,000 mg/kg (rat). Inhalation: LC50 792 ppm 4hr (rat). Acute static: LC50 96H > 1,000 mg/l (guppy). Eye irritation: none (rabbit). Skin irritation: negligible (rabbit). Skin sensitization: negative (guinea pig).

P 93-508

Manufacturer. Confidential.

Chemical. (G) Alkyl silane resin.

Use/Production. (G) Component of aqueous coating formulations. Prod. range: Confidential.

P 93-509

Manufacturer. Confidential.

Chemical. (G) Mixture of reaction products of diphenyl methane diisocyanate polymer; oxirane, methyl-, polymer with oxirane; and alkanolamine with methacrylate end groups.

Use/Production. (S) Graphic arts printing plate. Prod. range: Confidential.

P 93-510

Manufacturer. Confidential.*Chemical.* (G) Blocked isocyanate - terminated polyurethane.

Use/Production. (G) Component of industrial adhesive. Prod. range: Confidential.

P 93-511

Manufacturer. Confidential.

Chemical. (G) Hydrocarbon modified rosin resin.

Use/Production. (S) Floor covering adhesive. Prod. range: Confidential.

P 93-512

Importer. Akrochem Coporation.

Chemical. (G) Zinc dialkylidithiocarbamate.

Use/Import. (S) Accelerator for dry rubber powder, polymer-bound masterbatch, latex powder and polyolefines powder. Import range: Confidential.

Toxicity Data. Acute oral: LD50 > 5.0 g/kg (rat). Acute static: LC50 96hr 10 mg/l (rainbow trout). Mutagenicity: negative. Skin sensitization: positive (guinea pig).

P 93-513

Manufacturer. The Dow Chemical Company.

Chemical. (G) Proprietary modified carboxylated styrene butadiene polymer.

Use/Production. (S) Latex binder for paper coating applications. Prod. range: Confidential.

P 93-514

Manufacturer. Confidential.

Chemical. (G) Proprietary modified carboxylated styrene butadiene polymer.

Use/Production. (S) Latex binder for paper coating applications. Prod. range: Confidential.

P 93-515

Manufacturer. Confidential.

Chemical. (G) Proprietary modified carboxylated styrene butadiene polymer.

Use/Production. (S) Latex binder for paper coating applications. Prod. range: Confidential.

P 93-516

Manufacturer. Confidential.

Chemical. (G) Proprietary modified carboxylated styrene butadiene polymer.

Use/Production. (S) Latex binder for paper coating applications. Prod. range: Confidential.

P 93-517

Manufacturer. Confidential.

Chemical. (G) Amine compound with arylsulfonic acid.

Use/Production. (G) Coating additive. Prod. range: 40,000–100,000 kg/yr.

P 93-518

Manufacturer. Confidential.

Chemical. (G) Amine compound with arylsulfonic acid.

Use/Production. (G) Coating additive. Prod. range: 40,000–100,000 kg/yr.

P 93-519

Manufacturer. Confidential.

Chemical. (G) Amine compound with arylsulfonic acid.

Use/Production. (G) Coating additive. Prod. range: 40,000–100,000 kg/yr.

P 93-520

Manufacturer. Confidential.

Chemical. (G) Amine compound with arylsulfonic acid.

Use/Production. (G) Coating additive. Prod. range: 40,000–100,000 kg/yr.

P 93-521

Manufacturer. Confidential.

Chemical. (G) Amine compound with arylsulfonic acid.

Use/Production. (G) Coating additive. Prod. range: 40,000–100,000 kg/yr.

P 93-522

Manufacturer. Confidential.

Chemical. (G) Polyurethane polymer.

Use/Production. (G) Paint. Prod. range: Confidential.

P 93-523

Manufacturer. Confidential.

Chemical. (G) Acrylic copolymer.

Use/Production. (G) Paint. Prod. range: Confidential.

P 93-524

Manufacturer. Confidential.

Chemical. (G) Acrylic copolymer.

Use/Production. (G) Paint. Prod. range: Confidential.

P 93-525

Manufacturer. Confidential.

Chemical. (G) Acrylic copolymer.

Use/Production. (G) Paint. Prod. range: Confidential.

P 93-526

Manufacturer. Confidential.

Chemical. (G) Acrylic copolymer.

Use/Production. (G) Paint. Prod. range: Confidential.

P 93-527

Manufacturer. Confidential.

Chemical. (G) Acrylic copolymer.

Use/Production. (G) Paint. Prod. range: Confidential.

P 93-528

Manufacturer. Confidential.

Chemical. (G) Acrylic copolymer.

Use/Production. (G) Paint. Prod. range: Confidential.

P 93-529

Manufacturer. Confidential.

Chemical. (G) Acrylic copolymer.

Use/Production. (G) Paint. Prod. range: Confidential.

P 93-530

Manufacturer. Confidential.

Chemical. (G) Acrylic copolymer.

Use/Production. (G) Paint. Prod. range: Confidential.

P 93-531

Manufacturer. Confidential.

Chemical. (G) Mixture of reaction products of diphenyl methane disocyanate polymer; oxirane, methyl-, polymer with oxirane; and alkanolamine with methacrylate end group.

Use/Production. (S) Graphic arts printing plate. Prod. range: Confidential.

P 93-532

Importer. Confidential.

Chemical. (G) Substituted alcohol.

Use/Import. (G) Purification agent. Import range: Confidential.

Toxicity Data. Acute oral: LD50 1,500 mg/kg (rat). Acute dermal: LD50 4.92 g/kg (rabbit). Inhalation: LC50 > 5 g/kg 6

dys (rats). Eye irritation: strong (rabbit). Skin irritation: slight (rabbit). Mutagenicity: negative.

P 93-533

Manufacturer. Confidential.
Chemical. (G) Substituted benzene diazonium.
Use/Production. (G) Chemical intermediate. Prod. range: Confidential.

P 93-534

Manufacturer. Confidential.
Chemical. (G) Aromatic disulfide.
Use/Production. (G) Chemical intermediate. Prod. range: Confidential.

P 93-535

Manufacturer. Confidential.
Chemical. (G) Substituted triazine.
Use/Production. (G) Compounding ingredient for rubber. Prod. range: Confidential.
Toxicity Data. Acute oral: LD50 > 5.0 g/kg (rat). Eye irritation: none (rabbit). Skin irritation: negligible (rabbit).

P 93-536

Manufacturer. Confidential.
Chemical. (G) Substituted triazine.
Use/Production. (G) Compounding ingredient for rubber. Prod. range: Confidential.
Toxicity Data. Eye irritation: slight (rabbit). Skin irritation: negligible (rabbit).

P 93-537

Importer. MTC America, Inc.
Chemical. (G) Copolymer of glycidyl methacrylate, acrylonitrile and methacrylic esters.
Use/Import. (G) Binder for film coating. Import range: Confidential.

P 93-538

Manufacturer. Ashland Chemical.
Chemical. (G) Unsaturated polyester.
Use/Production. (G) Open, nondispersive use. Prod. range: Confidential.

P 93-539

Importer. Granmont Inc.
Chemical. (G) Liquid crystalline aromatic polyester.
Use/Import. (S) Function: specialty high temp. polymer application: engineering thermoplastic injection molding resin. Import range: Confidential.

P 93-540

Manufacturer. Ashland Chemical.
Chemical. (G) Saturated polyester.
Use/Production. (G) Open, nondispersive. Prod. range: Confidential.

P 93-541

Manufacturer. Ashland Chemical.
Chemical. (G) Unsaturated polyester.
Use/Production. (G) Open, dispersive use. Prod. range: Confidential.

P 93-542

Manufacturer. Confidential.
Chemical. (G) Polyester.
Use/Production. (G) Chemical intermediate. Prod. range: Confidential.

P 93-543

Importer. Dow Chemical Coporation.
Chemical. (G) Epoxy-functional polyalkylsiloxane.
Use/Import. (S) Silicone plastics adhesive. Import range: Confidential.
Toxicity Data. Acute oral: LD50 > 5,000 mg/kg (rat). Acute dermal: LD50 > 2,000 mg/kg (rabbit). Eye irritation: none (rabbit).Skin irritation: negligible (raait). Mutagenicity: negative.

P 93-544

Manufacturer. Confidential.
Chemical. (G) Isocyanate reaction products with primary amines.
Use/Production. (G) Lubricant additive. Prod. range: Confidential.
Toxicity Data. Acute oral: LD50 > 5,000 mg/kg (rat).

P 93-545

Manufacturer. Ciba-Geigy Corporation.
Chemical. (S) Ethanamine, 2-((2,4,8,10-tetrakis(1,1-dimethylethyl)dibenzo (d,f)(1,3,2) dioxaphosphepin-6-yl)oxy)-*N,N*-bis(2-((2,4,8,10-tetrakis(1,1-dimethylethyl) dibenzo(d,f)(1,3,2)dioxaphosphepin-6-yl)oxy)ethy)-.
Use/Production. (S) Process stabilizer (secondary antioxidant) for primarily polyolefins. Prod. range: Confidential.
Toxicity Data. Acute oral: LD50 > 5,000 mg/kg (rat). Eye irritation: slight (rabbit). Skin irritation: slight (rabbit). Mutagenicity: negative.

P 93-546

Importer. Confidential.
Chemical. (G) Dibasic acid/ glycol ester urethane.
Use/Import. (G) Used in combination with other resins for the manufacture of sheet molding compound (SMC). Import range: Confidential.

P 93-547

Manufacturer. Confidential.
Chemical. (G) Synthetic terpene dimer oil.
Use/Production. (G) Pesticide adjuvant. Prod. range: Confidential.

P 93-548

Manufacturer. Confidential.
Chemical. (S) Hydroxybutyl vinyl ether; 3-isocyanatopropyl triethoxy silane.
Use/Production. (S) A radiation curable coating for industrial use. Prod. range: Confidential.

P 93-549

Importer. Confidential.
Chemical. (S) 1,4-Dioxaspiro(4,5)decane-2-methano 1,9-methyl-6-(1-methylethyl)-.
Use/Import. (G) Additive for consumer produces; dispersive use. Import range: Confidential.
Toxicity Data. Acute oral: LD50 5,716 mg/kg (rat). Acute dermal: LD50 20,000 mg/kg (rat). Eye irritation: strong (rabbit). Mutagenicity: negative.Acute static: LC50 48h 32 mg/l (daphnia magna). Skin irritation: moderate (rabbit). Skin sensitization: positive (guinea pig).

P 93-550

Manufacturer. Pi-Tech, Inc.
Chemical. (S) Bis hydrogen zirconium IV tris (ditridecyl) diphosphate.
Use/Production. (S) Manufacture conversion to other derivative process aid/surfactant. Prod. range: Confidential.

P 93-551

Manufacturer. Pi-Tech, Inc..
Chemical. (S) Bis hydrogen, zirconium IV tris(ditridecyl) diphosphate.
Use/Production. (S) Manufacture conversion to other derivatives process aid/surfactant. Prod. range: Confidential.

P 93-552

Importer. Mitsubishi Yuka America, Inc.
Chemical. (S) *N,N'*-(2,2'-Dimethyl-4,4'-methylenediphenylene)bis maleimide.
Use/Import. (S) Heat resistant resin for printed circuit board, coating, electronics insulation and carbon fiber plastic. Import range: 1,000–30,000 kg/yr.
Toxicity Data. Acute oral: LD50 > 5,000 mg/kg (rat). Acute static: LC50 0.5 mg/l (oryzias latipre). Skin irritation: negligible (rabbit). Mutagenicity: negative.

P 93-553

Importer. Ciba-Geigy Corporation.
Chemical. (G) Substituted benzofurane sulfonic acid derivative.
Use/Import. (G) Detergent additive. Import range: Confidential.

P 93-554

Importer. Marubeni Specialty Chemicals Inc.
Chemical. (G) Collagen.
Use/Import. (S) Additive for artificial leathers, paints and coating agents

textile treatment agents. Import range: 12,000–60,000 kg/yr.

P 93–555

Manufacturer. Confidential.

Chemical. (S) 1-Chloro-4-*N*-propoxy-9*H*-thioxanthen-9-one.

Use/Production. (G) Photo initiator. Prod. range: Confidential.

P 93–556

Manufacturer. The C. P. Hall Company.

Chemical. (G) Neopentyl glycol diester.

Use/Production. (G) Carrier/binder. Prod. range: Confidential.

P 93–557

Manufacturer. Confidential.

Chemical. (G) Copolyester.

Use/Production. (G) Structural material. Prod. range: Confidential.

P 93–558

Manufacturer. Arizona Chemical.

Chemical. (G) Rosin ester.

Use/Production. (G) Prod. range: Confidential.

P 93–559

Manufacturer. The Dow Chemical Copmany.

Chemical. (G) Fluorinated cyclophospazene.

Use/Production. (S) Magnetic media lubricant. Prod. range: Confidential.

Toxicity Data. Acute oral: LD50 > 2,000 mg/kg (rat). Acute dermal: LD50 > 2,000 mg/kg (rabbit). Eye irritation: slight (rabbit). Skin irritation: negligible (rabbit).

P 93–560

Manufacturer. The Dow Chemical Company.

Chemical. (G) Fluorinated cyclophospazone.

Use/Production. (S) Magnetic media lubricant. Prod. range: Confidential.

Toxicity Data. Acute oral: LD50 > 2,000 mg/kg (rat). Acute dermal: LD50 > 2,000 mg/kg (rabbit). Eye irritation: slight (rabbit). Skin irritation: negligible (rabbit).

P 93–561

Manufacturer. Elf Atochem North America/Wire Mill.

Chemical. (S) Reaction product of ethylenediamine, phosphoric acid, and oleic acid.

Use/Production. (G) Wire drawing lubricant. Prod. range: Confidential.

P 93–562

Manufacturer. EiChrom Industries, Inc.

Chemical. (S) Phosphonic acid ethenylidene bis-, tetrakis(1-methyl) ester.

Use/Production. (S) Monomer in production of ion exchange resin. Prod. range: Confidential.

P 93–563

Importer. International Specialty Chemical.

Chemical. (G) Alkoxylated alkyl phenol.

Use/Import. (G) Lubricant additive. Import range: Confidential.

Toxicity Data. Acute oral: LD50 > 5.0 g/kg (rat). Acute static: LC50 96h > 1,000 mg/l (rainbow trout). Eye irritation: slight (rabbit). Skin irritation: slight (rabbit).

P 93–564

Importer. International Specialty Chemicals, Inc.

Chemical. (G) Phosphate ester of alkoxylated alkylphenol.

Use/Import. (G) Lubricant additive. Import range: Confidential.

Dated: March 11, 1993.

Frank V. Caesar,

Acting Director, Information Management Division, Office of Pollution Prevention and Toxics.

[FR Doc. 93–6607 Filed 3–22–93; 8:45 am]

BILLING CODE 6560–50–F

FEDERAL COMMUNICATIONS COMMISSION

Public Information Collection Requirements Submitted to Office of Management and Budget for Review

March 16, 1993

The Federal Communications Commission has submitted the following information collection requirements to OMB for review and clearance under the Paperwork Reduction Act of 1980 (44 U.S.C. 3507).

Copies of these submissions may be purchased from the Commission's copy contractor, International Transcription Service, Inc., 2100 M Street, suite 140, Washington, DC 20037, (202) 857–3800. For further information on these submissions contact Judy Boley, Federal Communications Commission, (202) 632–7513. Persons wishing to comment on these information collections should contact Jonas Neihardt, Office of Management and Budget, room 3235 NEOB, Washington, DC 20503, (202) 395–4814.

OMB Number: 3060–0084.

Title: Ownership Report for Noncommercial Educational Broadcast Station.

Form Number: FCC Form 323–E.

Action: Extension of a currently approved collection.

Respondents: Non-profit institutions.

Frequency of Response: On occasion reporting.

Estimated Annual Burden: 600 responses; 4 hours average burden per response; 2,400 hours total annual burden.

Needs and Uses: Each licensee/permittee of a noncommercial AM, FM and TV station is required to file an FCC Form 323–E within 30 days of the date of grant by the FCC of an application for original construction permit and after any changes occur in the information called for in the form; and in conjunction with a renewal application. Licensees with current unamended Ownership Reports on file at the Commission may so indicate on their renewal applications and be relieved of the obligation to file a new Ownership Report. The data is used by FCC staff to determine whether the licensee/permittee is abiding by the "Multiple Ownership" requirements as set forth in the Commission's rules.

OMB Number: 3060–0386.

Title: Section 73.1635, Special Temporary Authorizations (STA).

Action: Extension of a currently approved collection.

Respondents: Businesses or other for-profit (including small businesses).

Frequency of Response: On occasion reporting.

Estimated Annual Burden: 2,940 responses; 4 hours average burden per response; 11,760 hours total annual burden.

Needs and Uses: Section 73.1635 allows licensees/permittees of broadcast stations to file a request for special temporary authority (STA) to operate a broadcast facility for a period not to exceed 180 days at a specified variance from the terms of the station authorization or requirements of the FCC rules applicable to the particular class of station. Specifically, permittees or licensees must submit a letter to the FCC describing the proposed operation and the need for such authority at least 10 days prior to the date of the proposed operation, except when the special temporary authority is necessitated by unforeseen circumstances. In such cases, parties may notify the FCC by alternative means (e.g., telephone, telegram, facsimile) followed by a letter of confirmation. The data are used by FCC staff to determine whether a grant of the requested special temporary authority will maintain adequate compliance with technical and legal regulations to ensure that interference will not be caused to other stations.

Federal Communications Commission.
Donna R. Searcy,
Secretary.
[FR Doc. 93-6543 Filed 3-22-93; 8:45 am]
BILLING CODE 6712-01-M

DEPARTMENT OF HEALTH AND HUMAN SERVICES

Food and Drug Administration

Advisory Committees; Notice of Meetings

AGENCY: Food and Drug Administration, HHS.

ACTION: Notice.

SUMMARY: This notice announces forthcoming meetings of public advisory committees of the Food and Drug Administration (FDA). This notice also summarizes the procedures for the meetings and methods by which interested persons may participate in open public hearings before FDA's advisory committees.

MEETINGS: The following advisory committee meetings are announced:

OTC Drugs Advisory Committeee

Date, time, and place. April 8 and 9, 1993, 8 a.m., Parklawn Bldg., conference rooms D and E, 5600 Fishers Lane, Rockville, MD.

Type of meeting and contact person. Open committee discussion, April 8, 1993, 8 a.m. to 1 p.m.; closed committee deliberations, 1 p.m. to 2:30 p.m.; open public hearing, 2:30 p.m. to 3 p.m., unless public participation does not last that long; open committee discussion, 3 p.m. to 5 p.m.; open committee discussion, April 9, 1993, 8 a.m. to 1 p.m., open public hearing, 1 p.m. to 1:30 p.m., unless public participation does not last that long; open committee discussion, 1:30 p.m. to 5 p.m.; Mae Brooks or Lee L. Zwanziger, Center for Drug Evaluation and Research (HFD-9), Food and Drug Administration, 5600 Fishers Lane, Rockville, MD 20857, 301-443-4695.

General function of the committee. The committee reviews and evaluates available data concerning the safety and effectiveness of over-the-counter (nonprescription) human drug products for use in the treatment of a broad spectrum of human symptoms and diseases.

Agenda—Open public hearing. Interested persons may present data, information, or views, orally or in writing, on issues pending before the committee. Those desiring to make formal presentations should notify the contact person before April 1, 1993, and submit a brief statement of the general nature of the evidence or arguments they wish to present, the names and addresses of proposed participants, and an indication of the approximate time required to make their comments.

Open committee discussion. On April 8, 1993, the committee will discuss the role and appropriate dosage ranges of caffeine as an adjuvant in analgesic drug products. The agency's evaluation of data concerning caffeine as an adjuvant in analgesic drug products was discussed in comments 91 and 92 of the tentative final monograph for OTC internal analgesic, antipyretic, and antirheumatic drug products published in the **Federal Register** of November 16, 1988 (53 FR 46204 at 46244 and 46245). Additional data submitted since that time will be considered by the committee. The committee's discussion and recommendations on caffeine will be considered by the agency in its preparation of a final monograph for OTC internal analgesic drug products. On April 9, 1993, the committee will discuss portions of a citizen's petition related to continued marketing of OTC antidiarrheal drug products containing attapulgite, kaolin, and pectin. The committee will also discuss the role of oral rehydration therapy in the treatment of diarrhea. The petition under docket number 93P-0011 is available for public examination at the Dockets Management Branch (HFA-305), Food and Drug Administration, rm. 1-23, 12420 Parklawn Dr., Rockville, MD 20857, between 9 a.m. and 4 p.m., Monday through Friday. The agency's evaluation of data concerning these ingredients was discussed in comments 15, 23, and 24 of the tentative final monograph for OTC antidiarrheal drug products published in the **Federal Register** of April 30, 1986 (51 FR 16138 at 16142 and 16145). Additional data submitted since that time will be considered by the committee. The committee's discussion and recommendations on these ingredients will be considered by the agency in its preparation of a final monograph for OTC antidiarrheal drug products.

Closed committee deliberations. On April 8, 1993, the committee will discuss trade secret and/or confidential commercial information relevant to pending investigational new drug applications. This portion of the meeting will be closed to permit discussion of this information (5 U.S.C. 552b(c)(4)).

Circulatory System Devices Panel of the Medical Devices Advisory Committee

Date, time, and place. April 12, 13, and 14, 1993, 8:30 a.m., Hubert H. Humphrey Bldg., rms. 503-529A, 200 Independence Ave. SW., Washington, DC.

Type of meeting and contact person. Open public hearing, April 12, 1993, 8:30 a.m. to 9:30 a.m., unless public participation does not last that long; open committee discussion, 9:30 a.m. to 3 p.m.; closed presentation of data, 3 p.m. to 4 p.m.; open public hearing, April 13, 1993, 8:30 a.m. to 9:30 a.m., unless public participation does not last that long; open committee discussion, 9:30 a.m. to 3 p.m.; closed presentation of data, 3 p.m. to 4 p.m.; open public hearing, April 14, 1993, 8:30 a.m. to 9:30 a.m., unless public participation does not last that long; open committee discussion, 9:30 a.m. to 3 p.m.; closed presentation of data, 3 p.m. to 4 p.m.; closed committee deliberations, 4 p.m. to 4:30 p.m.; Wolf Sapirstein, Center for Devices and Radiological Health (HFZ-450), Food and Drug Administration, 1390 Piccard Dr., Rockville, MD 20850, 301-427-1205.

General function of the committee. The committee reviews and evaluates data on the safety and effectiveness of marketed and investigational devices and makes recommendation for their regulation.

Agenda—Open public hearing. Interested persons may present data, information, or views, orally or in writing, on issues pending before the committee. Those desiring to make formal presentations should notify the contact person before April 1, 1993, and submit a brief statement of the general nature of the evidence or arguments they wish to present, the names and addresses of proposed participants, and an indication of the approximate time required to make their comments.

Open committee discussion. The committee will discuss premarket approval applications for one or more implantable cardioverter defibrillator devices, prosthetic cardiac valves, and interventional cardiology devices.

Closed presentation of data. The committee may discuss trade secret and/or confidential commercial information regarding the devices listed above. This portion of the meeting will be closed to permit discussion of this information (5 U.S.C. 552b(c)(4)).

Closed committee deliberations. The committee may discuss trade secret and/or confidential commercial information regarding the devices listed above. This portion of the meeting will be closed to

permit discussion of this information (5 U.S.C. 552b(c)(4)).

Obstetrics and Gynecology Devices Panel of the Medical Devices Advisory Committee

Date, time, ana place. April 29 and 30, 1993, 9 a.m., Bethesda Ramada Inn, Ambassador Room, 8400 Wisconsin Ave., Bethesda, MD.

Type of meeting and contact person. Open public hearing, April 29, 1993, 9 a.m. to 10 a.m., unless public participation does not last that long; closed presentation of data, 10 a.m. to 11 a.m.; closed committee deliberations, 11 a.m. to 1 p.m.; open committee discussion, 1 p.m. to 5 p.m.; open public hearing, April 30, 1993, 9 a.m. to 10 a.m., unless public participation does not last that long; open committee discussion, 10 a.m. to 5 p.m.; Colin M. Pollard, Center for Devices and Radiological Health (HFZ-470), Food and Drug Administration, 1390 Piccard Dr., Rockville, MD 20850, 301-427-1180.

General function of the committee. The committee reviews and evaluates data on the safety and effectiveness of marketed and investigational devices and makes recommendations for their regulation.

Agenda—Open public hearing. Interested persons may present data, information, or views, orally or in writing, on issues pending before the committee. Those desiring to make formal presentations should notify the contact person before April 15, 1993, and submit a brief statement of the general nature of the evidence or arguments they wish to present, the names and addresses of proposed participants, and an indication of the approximate time required to make their comments.

Open committee discussion. The committee will discuss home uterine activity monitors (HUAM's) used for the early detection of preterm labor. The committee will review and make recommendations on premarket approval applications for HUAM's. The committee will also review and discuss draft guidelines for testing HUAM's.

Closed presentation of data. The committee will discuss trade secret and/or confidential commercial information regarding home uterine activity monitors. This portion of the meeting will be closed to permit discussion of this information (5 U.S.C. 552b(c)(4)).

Closed committee deliberations. The committee will discuss trade secret and/or confidential commercial information regarding home uterine activity monitors. This portion of the meeting will be closed to permit discussion of this information (5 U.S.C. 552b(c)(4)).

Each public advisory committee meeting listed above may have as many as four separable portions: (1) An open public hearing, (2) an open committee discussion, (3) a closed presentation of data, and (4) a closed committee deliberation. Every advisory committee meeting shall have an open public hearing portion. Whether or not it also includes any of the other three portions will depend upon the specific meeting involved. The dates and times reserved for the separate portions of each committee meeting are listed above.

The open public hearing portion of each meeting shall be at least 1 hour long unless public participation does not last that long. It is emphasized, however, that the 1 hour time limit for an open public hearing represents a minimum rather than a maximum time for public participation, and an open public hearing may last for whatever longer period the committee chairperson determines will facilitate the committee's work.

Public hearings are subject to FDA's guideline (subpart C of 21 CFR part 10) concerning the policy and procedures for electronic media coverage of FDA's public administrative proceedings, including hearings before public advisory committees under 21 CFR part 14. Under 21 CFR 10.205, representatives of the electronic media may be permitted, subject to certain limitations, to videotape, film, or otherwise record FDA's public administrative proceedings, including presentations by participants.

Meetings of advisory committees shall be conducted, insofar as is practical, in accordance with the agenda published in this **Federal Register** notice. Changes in the agenda will be announced at the beginning of the open portion of a meeting.

Any interested person who wishes to be assured of the right to make an oral presentation at the open public hearing portion of a meeting shall inform the contact person listed above, either orally or in writing, prior to the meeting. Any person attending the hearing who does not in advance of the meeting request an opportunity to speak will be allowed to make an oral presentation at the hearing's conclusion, if time permits, at the chairperson's discretion.

The agenda, the questions to be addressed by the committee, and a current list of committee members will be available at the meeting location on the day of the meeting.

Transcripts of the open portion of the meeting may be requested in writing from the Freedom of Information Office (HFI-35), Food and Drug Administration, rm. 12A-16, 5600 Fishers Lane, Rockville, MD 20857, approximately 15 working days after the meeting, at a cost of 10 cents per page. The transcript may be viewed at the Dockets Management Branch (HFA-305), Food and Drug Administration, rm. 1-23, 12420 Parklawn Dr., Rockville, MD 20857, approximately 15 working days after the meeting, between the hours of 9 a.m. and 4 p.m., Monday through Friday. Summary minutes of the open portion of the meeting may be requested in writing from the Freedom of Information Office (address above) beginning approximately 90 days after the meeting.

The Commissioner, with the concurrence of the Chief Counsel, has determined for the reasons stated that those portions of the advisory committee meetings so designated in this notice shall be closed. The Federal Advisory Committee Act (FACA) (5 U.S.C. app. 2, 10(d)), permits such closed advisory committee meetings in certain circumstances. Those portions of a meeting designated as closed, however, shall be closed for the shortest possible time, consistent with the intent of the cited statutes.

The FACA, as amended, provides that a portion of a meeting may be closed where the matter for discussion involves a trade secret; commercial or financial information that is privileged or confidential; information of a personal nature, disclosure of which would be a clearly unwarranted invasion of personal privacy; investigatory files compiled for law enforcement purposes; information the premature disclosure of which would be likely to significantly frustrate implementation of a proposed agency action; and information in certain other instances not generally relevant to FDA matters.

Examples of portions of FDA advisory committee meetings that ordinarily may be closed, where necessary and in accordance with FACA criteria, include the review, discussion, and evaluation of drafts of regulations or guidelines or similar preexisting internal agency documents, but only if their premature disclosure is likely to significantly frustrate implementation of proposed agency action; review of trade secrets and confidential commercial or financial information submitted to the agency; consideration of matters involving investigatory files compiled for law enforcement purposes; and review of matters, such as personnel records or individual patient records, where disclosure would constitute a clearly unwarranted invasion of personal privacy.

Examples of portions of FDA advisory committee meetings that ordinarily shall not be closed include the review, discussion, and evaluation of general preclinical and clinical test protocols and procedures for a class of drugs or devices; consideration of labeling requirements for a class of marketed drugs or devices; review of data and information on specific investigational or marketed drugs and devices that have previously been made public; presentation of any other data or information that is not exempt from public disclosure pursuant to the FACA, as amended; and, notably deliberative session to formulate advice and recommendations to the agency on matters that do not independently justify closing.

This notice is issued under section 10(a)(1) and (2) of the Federal Advisory Committee Act (5 U.S.C. app. 2), and FDA's regulations (21 CFR part 14) on advisory committees.

Dated: March 15, 1993.

Jane E. Henney,

Deputy Commissioner for Operations.

[FR Doc. 93-6531 Filed 3-22-93; 8:45 am]

BILLING CODE 4160-01-F

Health Resources and Services Administration

Announcement of Proposed Definitions, Post-Residency Activities, and Student Agreement for Primary Health Care and General Dentistry Service for the Exceptional Financial Need (EFN) and Financial Assistance for Disadvantaged Health Professions Students (FADHPS) Programs

SUMMARY: The Health Professions Education Extension Amendments of 1992 (Pub. L. 102-408, dated October 13, 1992) amend the Exceptional Financial Need (EFN) Scholarship Program, now found in section 736 of the Public Health Service (PHS) Act, and the Financial Assistance for Disadvantaged Health Professions Students (FADHPS) Program, now found in section 740 of the PHS Act. Both programs now contain service obligation provisions, requiring each scholarship recipient in schools of medicine, osteopathic medicine and dentistry to agree as follows:

(1) To complete the program of education for which the scholarship funds are received;

(2) In the case of an individual attending a school of medicine or osteopathic medicine, to:

(a) Enter and complete a residency training program in primary health care not later than 4 years after completing the program of education for which the scholarship funds are received; and

(b) Practice in primary health care for 5 years after competing the residency training program; and

(3) In the case of an individual attending a school of dentistry, to practice in general dentistry for 5 years (exclusive of any period during which the individual is attending a residency training program in general dentistry).

This notice will describe program elements necessary to implement the new provisions, proposed definitions of "residency training program in primary health care" and "residency training program in general dentistry", proposed acceptable and unacceptable post-residency activities, and a proposed student agreement for primary health care and general dentistry service.

EFFECTIVE DATE: The program elements described in this notice are proposed for use in fiscal year (FY) 1993 and would become effective with scholarships made to medical, osteopathic medical, and dental students on or after July 1, 1993. Public comments are invited on the proposed definitions, post-residency activities and student agreement. The comments will be considered prior to the publication of the final notice.

Proposed Definition of "Residency Training Program in Primary Health Care" and "Residency Training Program in General Dentistry"

Section 723(d)(5) of the PHS Act defines the term "primary health care" as family medicine, general internal medicine, general pediatrics, preventive medicine, or osteopathic general practice. The adjective "general" is not used as a modifier of internal medicine and pediatrics training programs. Residency programs that focus on training generalists are not separately approved by the Accreditation Council for Graduate Medical Education (ACGME) or listed in the National Resident Matching Program based on uniform criteria. Thus, it is difficult to discern in any given year which programs should be considered as "general". General internal medicine and general pediatrics "practice" is ultimately defined by decisions residents make following the completion of their 3-year residency programs.

"Residency Training Program in Primary Health Care" is defined as a 3-year residency program in allopathic family medicine, internal medicine, pediatrics, or preventive medicine approved by the ACGME, or a 2-3 year osteopathic residency program in internal medicine, pediatrics, preventive medicine or general practice (including an internship which emphasizes family medicine) approved by the American Osteopathic Association. Two-year osteopathic general practice programs that have not as yet converted to 3 years would also be considered primary health care residency programs for purposes of the EFN and FADHPS programs.

The allopathic and osteopathic programs are described separately to make it clear that approved osteopathic internal medicine, pediatrics and preventive medicine programs are included.

The osteopathic profession is converting its residency training programs from two years of post-doctoral training to three years of training. The authorizing legislation does not differentiate based on length of training. Therefore, both are acceptable training programs for the maintenance of physician eligibility under the EFN and FADHPS programs.

A "residency training program in general dentistry" shall include the following:

(1) Programs of advanced education for general dentistry, general practice residency programs, and pediatric dental residency programs, provided that they are accredited by the Commission on Dental Accreditation;

(2) Dental public health residency programs accredited by the Commission on Dental Accreditation (which may include one academic year in a program accredited by the Council on Education for Public Health, leading to the degree of Master's in Public Health or a similar graduate degree in public health); and

(3) Other continuous advanced education programs in general dentistry that are sponsored by an institution of higher education and that are recognized entities within the institution's administrative structure, as approved by the Secretary on a case-by-case basis.

This definition is intended to assure that a scholarship recipient is permitted to pursue any recognized advanced training program that would further his or her knowledge of general dentistry, including pediatric dentistry and dental public health. It also prohibits scholarship recipients from specializing in orthodontics, endodontics, oral surgery, prosthodontics, periodontics, or oral pathology.

Proposed Post-Residency Activities

Acceptable activities: Medical and osteopathic medical residency graduates who will qualify to meet the new service obligation requirement under the EFN and FADHPS programs include: (1) Generalist physician

graduates of a 3-year program in family practice, internal medicine or pediatrics who enter clinical practice; (2) preventive medicine graduates who practice in the primary health care fields of clinical preventive medicine, occupational medicine, or public health; (3) senior (chief) residents in a generalist or preventive medicine specialty; (4) faculty, administrators, or policy makers who maintain certification in one of the primary health care disciplines; (5) family physicians and internists who obtain a certificate of added qualification in geriatrics; and (6) internists and pediatricians who enter training to qualify for a certificate of added qualification in adolescent medicine or board certification in adolescent pediatrics.

An individual shall be considered to be "practicing in general dentistry" as long as he or she is working in the field of dentistry and has not specialized in, or has not limited his or her practice to, orthodontics, endodontics, oral surgery, prosthodontics, periodontics, or oral pathology.

Unacceptable activities: Physicians who will not meet the service obligation requirement under the EFN and FADHPS programs include those who: (1) Enter medical or pediatric subspecialty training (e.g., cardiology, gastroenterology); (2) enter training to qualify for a certificate of added qualification in sports medicine; (3) receive subspecialty certification; or (4) enter a non-primary health care specialty (e.g., obstetrics/gynecology, surgery, dermatology, radiology).

Dental scholarship recipients who specialize in orthodontics, endodontics, oral surgery, prosthodontics, periodontics, or oral pathology would be considered to be in breach of their service commitments.

In establishing this new service obligation requirement, Congress has recognized that access to affordable quality health care is dependent on a better balance between primary care and other specialties. Today only one-third of all physicians are in the generalist disciplines and less than one percent are in preventive medicine. At the same time the Nation has a growing supply of medical specialists which hinders efforts to expand access to primary care and control costs. Therefore, Congress has determined that these scholarship funds should be awarded on a targeted basis that supports the Nation's need for more generalist or public health physicians or general or public health dentists.

The authorizing legislation requires EFN and FADHPS participants to practice in primary health care or general dentistry for a period of 5 years following residency training. The above lists of post-residency activities are an attempt to cover most of the general categories of potential activities that scholarship recipients are likely to be engaged in and to thereby indicate how all activities will be evaluated. The principal criterion used to assess questionable activities was the likelihood that physicians or dentists engaged in the activity will have a long-term commitment to the delivery and promotion of primary health care and general dentistry services through practice, teaching, administration or policy activities.

Proposed Student Agreement for Primary Health Care and General Dentistry Service

The following Student Agreement for Primary Health Care and General Dentistry Service implements the new service obligation provisions applicable to sections 736 and 740 of the PHS Act and sets forth new requirements found in sections 795(b) of the PHS Act with respect to breach of service obligation, waiver or suspension of liability, and repayment requirements.

Exceptional Financial Need (EFN) and Financial Assistance for Disadvantaged Health Professions Students (FADHPS); Scholarship Programs; Student Agreement for Primary Health Care and General Dentistry Service; Academic Year 1993–94

A. My Obligations as a Scholarship Recipient

I understand that by accepting the EFN/FADHPS Scholarship, I am agreeing to the terms outlined below:

(1) I will complete the program of education with respect to which such assistance is provided;

(2) If I receive such assistance to attend a school of medicine or osteopathic medicine, I will

(a) Enter and complete a 3-year residency program in allopathic family medicine, internal medicine, pediatrics, or preventive medicine approved by the Accreditation Council for Graduate Medical Education (ACGME); or a 2–3 year osteopathic residency program in internal medicine, pediatrics, preventive medicine or general practice (including an internship which emphasizes family medicine) approved by the American Osteopathic Association, not later than 4 years after completing the program of education for which I received such assistance, and

(b) Practice in one of the primary health care specialties identified in paragraph (2)(a) for 5 years after completing the training identified in paragraph (2)(a).

(3) If I receive such assistance to attend a school of dentistry, I will practice in general dentistry for 5 years (exclusive of any period during which I am attending a residency training program in general dentistry).

(4) To receive the Scholarship, I must be a full-time (as determined by the health professions school) student at a school participating in the EFN/FADHPS Scholarship Program;

(5) I must maintain "good standing" as defined by the school;

(6) I must provide the school with all information regarding my financial resources and sources of income that the school requires to conduct a formal needs analysis;

(7) I am aware that the Scholarship pays my tuition and other reasonable educational expenses, as determined by the school, including fees, books and laboratory expenses for a full academic year, but does not provide for any costs of living;

(8) I must keep the school informed at all times of any changes which affect my continued eligibility for the Scholarship, such as withdrawal from the health professions program;

(9) I must attend an entrance interview with school officials before or at the time I sign this contract to discuss the terms of my Scholarship and service obligation and the penalties for not meeting my obligation;

(10) I must provide the school with personal information that would make it possible for the school and the Federal Government to locate me if I fail to keep them informed of my location. This information will include, at a minimum, my current or permanent address, my telephone number, the names, addresses, and telephone numbers of my parents or other close relatives that may be contacted. I will also provide other information as requested, including for example: State driver's license number and expiration date, names, addresses and telephone numbers of other personal references, and the State(s) in which I plan to practice primary care or general dentistry;

(11) I must keep the school informed at all times of any changes in the above information until I complete my service obligation as a primary care or general dentistry practitioner;

(12) Prior to graduating or leaving school for any reason, I must attend an exit interview with school officials to review information regarding eligible practice activities, to update personal information (as described in Item 10

above) and to review the terms of my service obligation and the penalties for not meeting the obligation. Should the school not inform me of a date and time for this interview, I must request an interview from the appropriate school officials.

B. Penalties If I Fail To Comply With Agreement

I understand that I am liable to the Federal Government (Department of Health and Human Services, DHHS) for the entire amount of any scholarship funds I have received and for interest on such amount at the maximum legal prevailing rate, if I

(1) Fail to maintain an acceptable level of academic standing in the program of education (as indicated by such program in accordance with requirements established by the Secretary);

(2) Am dismissed from the program for disciplinary reasons;

(3) Voluntarily terminate the program; or

(4) Fail to begin or complete the service obligation required by this contract in accordance with the terms of the contract.

In the event of my failure to comply with the terms of the contract for any of the above reasons, the Scholarship funds become a debt owed to the Federal Government and I must repay all Scholarship funds that I received under this contract, plus interest, at the maximum prevailing rate, as determined by the Treasury Department. I will be required to repay this amount in full within 3 years of the date that the Secretary determines that I failed to comply with the terms of this contract and will be required to make payments during the three years, in accordance with a repayment schedule which the Secretary will provide to me. If I fail to make payments when they are due in accordance with the repayment schedule, I understand that the Federal Government will actively pursue me to collect the debt. This may include the use of collection agents, reporting the debt to credit bureaus, and other collection procedures (such as addition of late charges under the Department's Claims Collection Regulations).

C. Cancellation, Suspension, and Waiver of Obligation

I understand that my service or payment obligation may be canceled, suspended, or waived under certain circumstances described below:

(1) Should I die or become permanently and totally disabled, the Secretary will cancel my obligation under this contract. To receive cancellation in the event of my death, the executor of my estate must submit an official death certificate to the Secretary. To receive cancellation for permanent and total disability, I or my representative must apply to the Secretary, submitting medical evidence of my condition, and the Secretary may cancel this obligation in accordance with applicable Federal statutes and regulations;

(2) Upon receipt of supporting documentation the Secretary may waive or suspend my service or payment obligation under this contract if the Secretary determines that: (a) my meeting the terms and conditions of the contract is impossible or would involve extreme hardship; and, (b) enforcement of the obligations would be unconscionable. Supporting documentation should be submitted to: Division of Student Assistance, Student and Institutional Support Branch, Room 8–34, Parklawn Building, 5600 Fishers Lane, Rockville, MD 20857.

D. Scholarship Renewal and Extension of Contract

This contract provides funding for *one year only*. Renewal of the contract is at the discretion of the school and is subject to the availability of funds.

EFN/FADHPS CONTRACT 1993–94

Tuition $ _____
Other Education Costs $ _____
Total $ _____
Name of Recipient _____
Mr _____
Ms _____
Permanent Address _____
City, State, Zip Code _____
Social Security Number _____ (voluntary)
Anticipated Graduation Date _____
Discipline _____

Scholarship Recipient: By my signature below, I certify that I have read and understand my rights and obligations under this contract.

_____
Signature of Scholarship Recipient

_____
Date

Grantee Institution: I understand that this award is made upon the terms, conditions and obligations specified in this contract.

_____
Grantee Institution (NAME)

_____
Signature of Authorizing Official

_____
Date

ANY PERSON WHO KNOWINGLY MAKES A FALSE STATEMENT OR MISREPRESENTATION OR COMMITS ANY OTHER ILLEGAL ACTION IN CONNECTION WITH THE EFN/FADHPS SCHOLARSHIP PROGRAMS IS SUBJECT TO A FINE OR IMPRISONMENT UNDER FEDERAL STATUTE.

Additional Information

Interested persons are invited to comment on the proposed definitions, post-residency activities and student agreement for primary health care and general dentistry service. The comment period is 30 days. All comments received on or before April 22, 1993, will be considered before the final definition and other program elements are established. Written comments should be addressed to: Mr. Michael Heningburg, Director, Division of Student Assistance, Bureau of Health Professions, Health Resources and Services Administration, Parklawn Building, room 8–48, 5600 Fishers Lane, Rockville, Maryland 20857.

All comments received will be available for public inspection and copying at the Division of Student Assistance, Bureau of Health Professions, at the above address, weekdays (Federal holidays excepted) between the hours of 8:30 a.m. and 5 p.m.

Dated: March 17, 1993.

Robert G. Harmon,

Administrator.

[FR Doc. 93–6578 Filed 3–22–93; 8:45 am]

BILLING CODE 4160–15–M

National Institutes of Health

National Cancer Institute; Cancellation of Meeting

Notice is hereby given that the meeting of the Program Project Task Force, National Cancer Advisory Board, National Cancer Institute, National Institutes of Health, scheduled for March 23, 1993 and published in the **Federal Register** (58 FR 13605) on March 12, 1993, is hereby canceled due to scheduling conflicts.

For further information, please contact Mrs. Barbara S. Bynum, Executive Secretary, P01 Program Project Task Force, National Cancer Institute, Executive Plaza North, room 600A, 9000 Rockville Pike, Rockville, Maryland 20892–9903 (301) 496–5147.

Dated: March 17, 1993.

Susan K. Feldman,

Committee Management Officer, NIH.

[FR Doc. 93–6560 Filed 3–22–93; 8:45 am]

BILLING CODE 4140–01–M

National Institute on Deafness and Other Communication Disorders; Meeting

Pursuant to Public Law 92–463, notice is hereby given of the meeting of the following National Institute on Deafness and Other Communication Disorders Special Emphasis Panel.

The meeting will be closed in accordance with the provisions set forth in sec. 552b(c)(4) and 552b(c)(6), title 5, U.S.C. and sec. 10(d) of Public Law 92–463, for the review, discussion and evaluation of individual grant applications, contract proposals, and/or cooperative agreements. These applications and/or proposals and the discussions could reveal confidential trade secrets or commercial property such as patentable material, and personal information concerning individuals associated with the applications and/or proposals, the disclosure of which would constitute a clearly unwarranted invasion of personal privacy.

Name of Panel: National Institute on Deafness and Other Communication Disorders Special Emphasis Panel.

Dates of Meeting: April 15, 1993.

Time of Meeting: 10 a.m. until adjournment.

Place of Meeting: Telephone Conference Call—room 400B, 6120 Executive Boulevard, Rockville, Maryland.

Agenda: Review of K08 Application.

Contact Person: Dr. Mary Nekola, Scientific Review Administrator, NIDCD/SRB, Executive Plaza South, room 400B, Bethesda, Maryland 20892, (301) 496–8683.

(Catalog of Federal Domestic Assistance Program No. 93.173 Biological Research Related to Deafness and Other Communicative Disorders)

Dated: March 16, 1993.

Susan K. Feldman,

Committee Management Officer, NIH.

[FR Doc. 93–6561 Filed 3–22–93; 8:45 am]

BILLING CODE 4140–01–M

DEPARTMENT OF THE INTERIOR

Bureau of Land Management

[WY–930–4210–04; WYW 106566]

Notice of Conveyance and Opening Order; Wyoming

AGENCY: Bureau of Land Management, Interior.

ACTION: Notice of exchange of public land in Sheridan County for private land in Sheridan County.

SUMMARY: This notice advises the public of completion of an exchange of Federal surface estate for private surface estate, between the United States, Bureau of Land Management, and Giles Pritchard-Gordon and Veronica Pritchard-Gordon, and The Sussex Cattle Company, under the authority of section 206 of the Federal Land Policy and Management Act of 1976, as amended, 43 U.S.C. 1716.

EFFECTIVE DATE: March 23, 1993.

FOR FURTHER INFORMATION CONTACT: Tamara Gertsch, Bureau of Land Management, Wyoming State Office, P.O. Box 1828, 2515 Warren Avenue, Cheyenne, Wyoming 82001, 307–775–6115.

SUPPLEMENTARY INFORMATION: The Federal surface estate of the following described land has been conveyed to The Sussex Cattle Company of Sheridan, Wyoming:

Sixth Principal Meridian, Wyoming

T. 57 N., R. 77 W.,
Sec. 32, lot 6.
The land described contains 44.02 acres.

1. In exchange for the Federal surface estate described above, the United States acquired the following described surface estate:

Sixth Principal Meridian, Wyoming

T. 57 N., R. 77 W.,
Tract 51.
The land described contains 40.00 acres.

2. The fair market value of the private land conveyed to the United States is $1,600.00. The fair market value of the Federal land conveyed to The Sussex Cattle Company is $1,760.00. A cash equalization payment of $160.00 was paid by The Sussex Cattle Company to the Bureau of Land Management.

3. At 9 a.m. on April 22, 1993, the land will be opened to the operation of the public land laws generally, subject to valid existing rights, the provisions of existing withdrawals, and the requirements of applicable law. All valid applications received at or prior to 9 a.m., April 22, 1993, will be considered as simultaneously filed at that time. Those received thereafter will be considered in the order of filing.

Dated: March 11, 1993.

John A. Naylor,

Chief, Branch of Land Resources.

[FR Doc. 93–6571 Filed 3–22–93; 8:45 am]

BILLING CODE 4310–22–M

[CO–930–4210–06; COC–48691]

Proposed Withdrawal; Opportunity for Public Meeting; Colorado

AGENCY: Bureau of Land Management, Interior.

ACTION: Notice.

SUMMARY: The U.S. Department of Agriculture, Forest Service, proposes to withdraw an additional 4,874.06 acres of National Forest System land adjacent to an existing withdrawal near Vail, Colorado, to protect recreational facilities and high resource values at the Vail Ski Area. This proposed action will withdraw the entire 13,214.64 acres of National Forest System land for 20 years. This notice closes the 4,874.06 acres to location and entry under the mining laws for up to two years. The lands remain open to mineral leasing and to such forms of disposition as may by law be made of National Forest System lands.

DATES: Comments on this proposed withdrawal or requests for public meeting must be received on or before June 21, 1993.

ADDRESSES: Comments and requests for a meeting should be sent to the Colorado State Director, BLM, 2850 Youngfield Street, Lakewood, Colorado 80215–7076.

FOR FURTHER INFORMATION CONTACT: Bob Barbour, 303/239–3708.

SUPPLEMENTARY INFORMATION: On March 5, 1993, the Department of Agriculture, Forest Service, filed an application to withdraw the following described National Forest System lands from location and entry under the United States mining laws:

Sixth Principal Meridian

White River National Forest

T. 5 S., R. 80 W.,
Sec. 25, SW½, W½W½SE¼;
Sec. 26, S½;
Sec. 28, S½;
Sec. 29; S½;

The above-described lands are contiguous to the southerly boundary of the Vail Ski Area withdrawal described in Public Land Order No. 6785, **Federal Register**, Vol. 55, page 27822.

Sec. 30, SE¼NE¼;
Sec. 32, NE¼, E½NW¼, E½SE¼, N½NW¼SE¼ and N½NE¼SW¼;
Sec. 33, All;
Sec. 34, All;
Sec. 35, All;
Sec. 36, W½NE¼, NW¼, N½SW¼, and NW¼SE¼;
T. 6 S., R. 80 W.,
Sec. 3, lots 5, 6, 7, 8, 9 and 10;
Sec. 4, lots 5, 6, 7, 8, 9, 10, 11, 12, and S½N½;
Sec. 5, lots 5, 6, 11, 12, and S½NE¼.

The area described aggregates approximately 4,874.06 acres in Eagle County.

For a period of 90 days from the date of publication of this notice, all persons who wish to submit comments, suggestions, or objections in connection

with this proposal, or to request a public meeting, may present their views in writing to the Colorado State Director. If the authorized officer determines that a meeting should be held, the meeting will be scheduled and conducted in accordance with the Bureau of Land Management Manual, Section 2351.16B. A notice of the date, time and place of the meeting will be published in the **Federal Register** at least 30 days prior to the meeting. This application will be processed in accordance with the regulations set forth in 43 CFR Part 2310.

For a period two years from the date of publication of this notice in the **Federal Register**, the land will be segregated from the mining laws as specified above unless the application is denied or cancelled or the withdrawal is approved prior to that date. During this period the Forest Service will continue to manage these lands.

Dated: March 12, 1993.

Robert S. Schmidt,

Chief, Branch of Realty Programs.

[FR Doc. 93-6572 Filed 3-22-93; 8:45 am]

BILLING CODE 4310-22-M

National Park Service

Subsistence Resource Commission

AGENCY: National Park Service, Interior.

ACTION: Subsistence Resource Commission meeting.

SUMMARY: The Superintendent of Gates of the Arctic National Park and Preserve and the Chairperson of the Subsistence Resource Commission for Gates of the Arctic National Park announce a forthcoming meeting of the Gates of the Arctic National Park Subsistence Resource Commission.

The following agenda items will be discussed:

(1) Roll call and review of agenda.
(2) Approval of summary of minutes.
(3) Superintendent's welcome:
  a. Introduction of guests.
  b. Review of SRC function, purpose and charter.
(4) Superintendent's Report.
(5) Election of Chairperson.
(6) Old Business:
  a. Dalton Highway Corridor issues.
  b. Resource Management Plan discussion.
  c. ATV agreement update.
  d. Federal Subsistence Management Program update.
  e. Review comments on Hunting Plan Recommendation #6.
  f. Battles Road update.
  g. Moose Survey.
(7) New Business:
  a. Secretarial response to draft Hunting Plan.
  b. Resident zone communities.
  c. Traditional use areas.
  d. Customary and traditional use determinations.
(8) Public and other agency comments.
(9) Set time and place of next SRC meeting.

DATES: The meeting will be held Tuesday through Thursday, April 13-15, 1993. Each day's meeting will begin at 9 a.m. and conclude around 5 p.m. (noon on Thursday).

LOCATION: The meeting will be held at the Sophie Station Hotel in Fairbanks, Alaska.

FOR FURTHER INFORMATION CONTACT: Roger Siglin, Superintendent, PO Box 74680, Fairbanks, Alaska 99707. Phone (907) 456-0281.

SUPPLEMENTARY INFORMATION: The Subsistence Resource Commissions are authorized under title VIII, section 808, of the Alaska National Interest Lands Conservation Act, Public Law 96-487, and operate in accordance with the provisions of the Federal Advisory Committees Act.

John M. Morehead,

Regional Director.

[FR Doc. 93-6622 Filed 3-22-93; 8:45 am]

BILLING CODE 4310-70-M

National Register of Historic Places; Notification of Pending Nominations

Nominations for the following properties being considered for listing in the National Register were received by the National Park Service before March 13, 1993. Pursuant to § 60.13 of 36 CFR part 60 written comments concerning the significance of these properties under the National Register criteria for evaluation may be forwarded to the National Register, National Park Service, P.O. Box 37127, Washington, DC 20013-7127. Written comments should be submitted by April 7, 1993.

Antoinette J. Lee,

Acting Chief of Registration, National Register.

ARIZONA

Yavapai County

Mulvenon Building, 230 W. Gurley St., Prescott, 93000287

CALIFORNIA

San Francisco County

Jackson Brewing Company, 1475-1489 Folsom St. and 319-351 11th St., San Francisco, 93000284

COLORADO

Hinsdale County

Rose Lime Kiln, Co. Rd. 20 SW of Lake City, Lake City vicinity, 93000293

CONNECTICUT

Fairfield County

Bartlett, Daniel and Esther, House, 43 Lonetown Rd., Redding, 93000290

Hartford County

Central Avenue—Center Cemetery Historic District (East Hartford MPS), Center Ave. from Main St. to Elm St. and Center Cemetery to the N, East Hartford, 93000289

Windham County

North Grosvenordale Mill Historic District, Riverside Dr. (CT 12), Buckley Hill Rd., Floral Ave., Market La., and Marshall, Central River, and Holmes Sts., Thompson, 93000288

FLORIDA

Brevard County

Whaley, Marion S., Citrus Packing House, 2275 US 1, Rockledge, 93000286

Volusia County

Holly Hill Municipal Building, 1065 Ridgewood Ave., Holly Hill, 93000285

LOUISIANA

Jefferson Davis Parish

Mahaffey, T.C., House, 802 Cary, Jennings, 93000292

MASSACHUSETTS

Suffolk County

Congregation Aqudath Shalom, 145 Walnut St., Chelsea, 93000283

MONTANA

Carbon County

Gebo Cemetery, Co Rd. linking Gebo and Fromberg, Fromberg vicinity, 93000291

A proposed move is being considered for the following property:

CALIFORNIA

Butte County

Magalia Community Church, Stirling Hwy. Magalia, 82002172.

[FR Doc. 93-6623 Filed 3-22-93; 8:45 am]

BILLING CODE 4310-70-M

INTERSTATE COMMERCE COMMISSION

Agency Information Collection Under OMB Review

The following proposal for collection of information under the provisions of the Paperwork Reduction Act (44 U.S.C. Chapter 35) is being submitted to the Office of Management and Budget for review and approval. Copies of the form and supporting documents may be obtained from the Agency Clearance Officer, Nancy Sipes, (202) 927-5040. Comments regarding this information

collection should be addressed to Nancy Sipes, Interstate Commerce Commission, room 1312, Washington, DC 20423 and to the Office of Management and Budget, Office of Information and Regulatory Affairs, Attn: Desk Officer for ICC, Washington, DC 20503. When submitting comments, refer to the OMB number or the title of the form.

Type of Clearance: Extension without change of a currently approved form.
Bureau/Office: Office of Economics.
Title of Form: Annual Survey Form for Certain Switching and Terminal Companies.
OMB Form Number: 3120–0111.
Agency Form Number: Switching and Terminal Companies (S and T).
Frequency: Annually.
No. of Respondents: 18.
Total Burden Hours: 72.

Sidney L. Strickland, Jr.,
Secretary.

[FR Doc. 93–6594 Filed 3–22–93; 8:45 am]

BILLING CODE 7035–01–M

[Ex Parte No. MC–95 (Sub-No. 8)]

Adequacy of Intercity Motor Common Carrier Passenger Service

AGENCY: Interstate Commerce Commission.

ACTION: Bus study; extension of comment due date.

SUMMARY: By notice served March 5, 1993 (58 FR 13282, March 10, 1993), the Commission requested comments by April 9, 1993, on several topics related to the adequacy of service in the motor carrier passenger industry and certain carrier practices. By letter filed March 11, 1993, United Bus Owners of America (UBOA) and the American Bus Association (ABA) jointly request an extension of not less than 30 days to file comments. UBOA and ABA state additional time is needed to advise their members of the proceeding and prepare adequate comments on the complex issues presented. A 30-day extension will be granted. This extension will accommodate UBOA and ABA's need for additional time to prepare their comments, and should not delay the Commission's study.

DATES: Comments must be filed by May 10, 1993.

ADDRESSES: Send an original and 10 copies of comments, referring to Ex Parte No. MC–95 (Sub-No. 8), to: Office of the Secretary, Case Control Branch, room 1324, Interstate Commerce Commission, Washington, DC 20423.

FOR FURTHER INFORMATION CONTACT: Richard Felder, (202) 927–5610, [TDD for hearing impaired: (202) 927–5721].

Decided: March 17, 1993.

By the Commission, Sidney L. Strickland, Jr., Secretary.

Sidney L. Strickland, Jr.,
Secretary.

[FR Doc. 93–6593 Filed 3–22–93; 8:45 am]

BILLING CODE 7035–01–M

Notice of Intent To Engage in Compensated Intercorporate Hauling Operations

This is to provide notice as required by 49 U.S.C. 10524(b)(1) that the named corporations intend to provide or use compensated intercorporate hauling operations as authorized in 49 U.S.C. 10524(b).

1. Parent corporation and address of principal office: Scrivner, Inc., an Oklahoma Corporation, Corporate Office, 5701 North Shartel, Oklahoma City, Oklahoma 73118.

2. Wholly-owned subsidiaries which will participate in the operations and State(s) of incorporation:

Scrivner of Alabama, Inc., Incorporated in Alabama
Scrivner of Kansas, Inc., Incorporated in Kansas
Scrivner, Columbus Division, Incorporated in New York
Scrivner of Illinois, Inc., Incorporated in Illinois
Scrivner, Syracuse Division, Incorporated in New York
Scrivner of Tennessee, Inc., Incorporated in Tennessee
Scrivner of Texas, Inc., Incorporated in Texas
Scrivner, Buffalo Division, Incorporated in New York
Scrivner of Iowa, Inc., Incorporated in Iowa
Scrivner of North Carolina, Incorporated in North Carolina
Scrivner, Oklahoma Division, Incorporated in Delaware
Scrivner of Pennsylvania, Inc., Incorporated in Pennsylvania
Scrivner Transportation, Inc., Incorporated in Oklahoma.

Sidney L. Strickland, Jr.,
Secretary.

[FR Doc. 93–6591 Filed 3–22–93; 8:45 am]

BILLING CODE 7035–01–M

[Ex Parte No. 290 (Sub. 5) (93–2)]

Quarterly Rail Cost Adjustment Factor; Notice

AGENCY: Interstate Commerce Commission.

ACTION: Approval of rail cost adjustment factor and decision.

SUMMARY: The Commission has approved a second quarter 1993 rail cost adjustment factor (RCAF) and cost index filed by the Association of American Railroads. The second quarter RCAF (Unadjusted) is 1.005. The second quarter RCAF (Adjusted) is 0.848, a decrease of 1.7 percent from the first quarter 1993 RCAF (Adjusted) of 0.863. Maximum second quarter 1993 RCAF rate levels may not exceed 98.3 percent of maximum first quarter 1993 RCAF rate levels.

EFFECTIVE DATE: April 1, 1993.

FOR FURTHER INFORMATION CONTACT: John C. Pertino, (202) 927–6229, Robert C. Hasek, (202) 927–6239, TTD for hearing impaired, (202) 927–5721

SUPPLEMENTARY INFORMATION: Additional information is contained in the Commission's decision. To purchase a copy of the full decision write to, or call, or pick up in person from: Dynamic Concepts, Inc., Room 2229, Interstate Commerce Commission Building, Washington, DC 20423, or telephone (202) 289–4357/4359. [Assistance for the hearing impaired is available through TDD services (202) 927–5721.]

This action will not significantly affect either the quality of the human environment or energy conservation.

Decided: March 16, 1993.

By the Commission, Chairman McDonald, Vice Chairman Simmons, Commissioners Phillips, Philbin, and Walden.

Sidney L. Strickland, Jr.,
Secretary.

[FR Doc. 93–6542 Filed 3–22–93; 8:45 am]

BILLING CODE 7035–01–M

DEPARTMENT OF LABOR

Employment and Training Administration

Job Training Partnership Act and Targeted Jobs Tax Credit; Lower Living Standard Income Level

AGENCY: Employment and Training Administration, Labor.

ACTION: Notice of determination of lower living standard income level.

SUMMARY: The Job Training Partnership Act (JTPA) provides that the term "economically disadvantaged" may be defined as 70 percent of the "lower living standard income level" (LLSIL). To provide the most accurate data possible, the Department of Labor is issuing revised figures for the LLSIL. The Internal Revenue Code also provides that the term "economically disadvantaged" may be defined as 70 percent of the LLSIL for purposes of the Targeted Jobs Tax Credit (TJTC).

EFFECTIVE DATE: This notice is effective on March 23, 1993.

ADDRESSES: Send written comments to: Mr. Hugh Davies, Acting Director, Office of Employment and Training Programs, Employment and Training Administration, Department of Labor, room N-4703, 200 Constitution Avenue NW., Washington, DC 20210.

FOR FURTHER INFORMATION CONTACT: Mr. Hugh Davies, Telephone: 202-219-5580 (this is not a toll free number).

SUPPLEMENTARY INFORMATION: It is a purpose of the Job Training Partnership Act (JTPA) "to afford job training to those economically disadvantaged individuals * * * who are in special need of such training to obtain productive employment." JTPA section 2; see 20 CFR 626.1 and 626.3(b). JTPA section 4(8) defines, for the purposes of JTPA eligibility, the term "economically disadvantaged" in part by reference to the "lower living standard income level" (LLSIL). See 20 CFR 626.5.

The LLSIL figures published in this notice shall be used to determine whether an individual is economically disadvantaged for applicable JTPA purposes. JTPA section 4(16) defines the LLSIL as follows:

> The term "lower living standard income level" means that income level (adjusted for regional, metropolitan, urban, and rural differences and family size) determined annually by the Secretary [of Labor] based on the most recent "lower living family budget" issued by the Secretary.

Internal Revenue Code (I.R.C.) sections 44B and 51 established the Targeted Jobs Tax Credit (TJTC) for a portion of the wages paid by employers to employees from "targeted" groups. Certain of the targeted groups require that the worker be a member of "an economically disadvantaged family." See, e.g., 26 U.S.C. 51(d)(3)(A)(ii), (4)(C), (7)(B), (8)(A)(iv), and (12)(A)(iv). The LLSIL figures published in this notice shall be used to determine whether an individual is a member of an economically disadvantaged family for applicable TJTC purposes.

The most recent lower living family budget was issued by the Secretary in the fall of 1981. Using those data, the 1981 LLSIL was determined for programs under the now-repealed Comprehensive Employment and Training Act, and for the TJTC. The four-person urban family budget estimates previously published by the Bureau of Labor Statistics (BLS) provided the basis for the Secretary to determine the LLSIL for training and employment program operators. BLS terminated the four-person family budget series in 1982, after publication of the Fall 1981 estimates.

Under JTPA, the Employment and Training Administration (ETA) published the 1992 updates to the LLSIL in the **Federal Register** of April 3, 1992. 57 FR 11512. ETA has again updated the LLSIL to reflect cost of living increases for 1992 by applying the percentage change in the December 1992 Consumer Price Index for All Urban Consumers (CPI-U), compared with the December 1991 CPI-U, to each of the April 3, 1992 LLSIL figures. Those updated figures for a family of four are listed in Table 1 below by region for both metropolitan and nonmetropolitan areas. Since eligibility is determined by family income at 70 percent of the LLSIL, pursuant to section 4(8) of JTPA, those figures are listed below as well.

Jurisdictions included in the various regions, based generally on Census Divisions of the U.S. Department of Commerce, are as follows:

Northeast

Connecticut	New York
Maine	Pennsylvania
Massachusetts	Rhode Island
New Hampshire	Vermont
New Jersey	Virgin Islands

North Central

Illinois	Missouri
Indiana	Nebraska
Iowa	North Dakota
Kansas	Ohio
Michigan	South Dakota
Minnesota	Wisconsin

South

Alabama	Kentucky
American Samoa	Louisiana
Arkansas	Marshall Islands
Delaware	Maryland
District of Columbia	Mississippi
Florida	Micronesia
Georgia	North Carolina
Northern Marianas	Tennessee
Oklahoma	Texas
Palau	Virginia
Puerto Rico	West Virginia
South Carolina	

West

Arizona	New Mexico
California	Oregon
Colorado	Utah
Idaho	Washington
Montana	Wyoming
Nevada	

Additionally, separate figures have been provided for Alaska, Hawaii, and Guam as indicated in Table 2 below.

For Alaska, Hawaii, and Guam, the 1993 figures were updated by creating a "State Index" based on the ratio of the urban change in the State (using Anchorage for Alaska and Honolulu for Hawaii and Guam) compared to the West regional metropolitan change, and then applying that index to the West regional nonmetropolitan change.

Data on 25 selected Metropolitan Statistical Areas (MSAs) are also available. These are based on monthly, bimonthly or semiannual CPI-U changes for a 12-month period ending in December 1992. The updated LLSIL figures for these MSAs, and 70 percent of the LLSIL, rounded to the next highest ten, are set forth in Table 3 below.

Table 4 below is a listing of each of the various figures at 70 percent of the updated 1993 LLSIL for family sizes of one to six persons. For families larger than six persons, an amount equal to the difference between the six-person and the five-person family income levels should be added to the six-person family income level for each additional person in the family. Where the poverty level for a particular family size is greater than the corresponding LLSIL figure, the figure is indicated in parentheses.

Section 4(8) of JTPA defines "economically disadvantaged" as, among other things, an individual whose family income was not in excess of the higher of the poverty level or 70 percent of the LLSIL. The Department of Health and Human Services published the annual update of the poverty-level guidelines at 58 FR 8287 (February 12, 1993).

Use of These Data

Based on these data, Governors should provide the appropriate figures to service delivery areas (SDAs), State Employment Security Agencies, and employers in their States to use in determining eligibility for JTPA and TJTC. The Governor should designate the appropriate LLSILs for use within the State from Tables 1 through 3. Table 4 may be used with any of the levels designated.

Information may be provided by disseminating information on MSAs and metropolitan and nonmetropolitan areas within the State, or it may involve further calculations. For example, the State of New Jersey may have four or more figures: Metropolitan, nonmetropolitan, for portions of the State in the New York City MSA, and for those in the Philadelphia MSA. If an SDA includes areas that would be covered by more than one figure, the Governor may determine which is to be used. Pursuant to the JTPA regulations at 20 CFR 627.200, guidelines, interpretations, and definitions adopted by the Governor shall be accepted by the Secretary to the extent that they are consistent with the JTPA and the JTPA regulations.

Disclaimer on Statistical Uses

It should be noted that the publication of these figures is only for the purpose of determining eligibility for applicable JTPA and TJTC programs. BLS has not revised the lower living family budget since 1981, and has no plans to do so. The four-person urban family budget estimates series has been terminated. The CPI–U adjustments used to update the LLSIL for this publication are not precisely comparable, most notably because certain tax items were included in the 1981 LLSIL but are not in the CPI–U.

Thus, these figures should not be used for any statistical purposes, and are valid only for eligibility determination purposes under the JTPA and TJTC programs.

Signed at Washington, DC, this 12th day of March, 1993.

Carolyn M. Golding,

Acting Assistant Secretary of Labor.

TABLE 1.—LOWER LIVING STANDARD INCOME LEVEL BY REGION [1]

Region	1993 adjusted LLSIL	70 percent LLSIL
Northeast:		
Metro	$24,890	$17,430
Non-Metro	24,730	17,320
North Central:		
Metro	22,930	16,060
Non-Metro	21,550	15,090
South:		
Metro	21,740	15,220
Non-Metro	20,420	14,300
West:		
Metro	24,550	17,190

TABLE 1.—LOWER LIVING STANDARD INCOME LEVEL BY REGION [1]—Continued

Region	1993 adjusted LLSIL	70 percent LLSIL
Non-Metro	23,750	16,630

[1] For ease of calculation, these figures have been rounded to the next highest ten dollars.

TABLE 2.—LOWER LIVING STANDARD INCOME LEVEL—ALASKA, HAWAII AND GUAM [1]

Region	1993 adjusted LLSIL	70 percent LLSIL
Alaska:		
Metro	$31,440	$22,010
Non-Metro	30,420	20,640
Hawaii-Guam:		
Metro	34,100	23,870
Non-Metro	32,990	22,100

[1] Rounded to the next highest ten dollars.

TABLE 3.—LOWER LIVING STANDARD INCOME LEVEL—25 MSAS [1]

Region MSA	1993 adjusted LLSIL	70 percent LLSIL
Anchorage, AK	$31,440	$22,010
Atlanta, GA	21,590	15,120
Baltimore, MD	23,370	16,360
Boston-Lawrence-Salem, MA/NH	26,420	18,500
Buffalo-Niagara Falls, NY	22,300	15,610
Chicago-Gary-Lake County, IL/IN/WI	24,010	16,810
Cincinnati-Hamilton, OH/KY/IN	23,050	16,140

TABLE 3.—LOWER LIVING STANDARD INCOME LEVEL—25 MSAS [1]—Continued

Region MSA	1993 adjusted LLSIL	70 percent LLSIL
Cleveland-Akron-Lorain, OH	23,680	16,580
Dallas-Ft Worth, TX	20,840	14,590
Denver-Boulder, CO	22,480	15,740
Detroit-Ann Arbor, MI	21,950	15,370
Honolulu, HI	34,100	23,870
Houston-Galveston-Brazoria, TX	20,570	14,400
Kansas City, MO/KS	22,050	15,440
Los Angeles-Anaheim-Riverside, CA	25,920	18,150
Milwaukee, WI	23,070	16,150
Minneapolis-St Paul, MN/WI	22,340	15,640
New York-Northern N.J.-Long Island, NY/NJ/CT	25,980	18,190
Philadelphia-Wilmington-Trenton, PA/NJ/DE/MD	24,330	17,040
Pittsburgh-Beaver Valley, PA	22,960	16,080
St Louis-East St Louis, MO/IL	22,370	15,660
San Diego, CA	25,720	18,000
San Francisco-Oakland-San Jose, CA	25,540	17,880
Seattle-Tacoma, WA	25,730	18,010
Washington, DC/MD/VA	26,740	18,720

[1] Rounded to the next highest ten dollars.

TABLE 4.—SEVENTY PERCENT OF UPDATED 1993 LLSIL, BY FAMILY SIZE [1]

[In dollars]

Family of one	Two	Three	Four	Five	Six
(5,150)	(8,440)	(11,590)	(14,300)	16,880	19,740
(5,190)	(8,500)	(11,670)	(14,400)	17,000	19,880
(5,260)	(8,610)	(11,820)	(14,590)	17,220	20,140
(5,440)	(8,910)	12,230	15,090	17,810	20,830
(5,450)	(8,930)	12,250	15,120	17,850	20,870
(5,480)	(8,980)	12,330	15,220	17,960	21,010
(5,540)	(9,070)	12,450	15,370	18,140	21,220
(5,560)	(9,110)	12,510	15,440	18,220	21,310
(5,620)	(9,210)	12,650	15,610	18,420	21,550
(5,630)	(9,230)	12,670	15,640	18,460	21,590
(5,640)	(9,240)	12,690	15,660	18,480	21,620
(5,670)	(9,290)	12,750	15,740	18,580	21,730
(5,790)	9,480	13,010	16,060	18,960	22,170
(5,790)	9,490	13,030	16,080	18,980	22,190
(5,810)	9,530	13,080	16,140	19,050	22,280
(5,820)	9,530	13,090	16,150	19,060	22,290
(5,890)	9,660	13,260	16,360	19,310	22,580
(5,970)	9,790	13,430	16,580	19,570	22,880
(5,990)	9,820	13,470	16,630	19,630	22,949
(6,060)	9,920	13,620	16,810	19,840	23,200
(6,140)	10,060	13,810	17,040	20,110	23,520

TABLE 4.—SEVENTY PERCENT OF UPDATED 1993 LLSIL, BY FAMILY SIZE [1]—Continued

[In dollars]

Family of one	Two	Three	Four	Five	Six
(6,190)	10,150	13,930	17,190	20,290	23,730
(6,240)	10,220	14,030	17,320	20,440	23,910
(6,280)	10,290	14,120	17,430	20,570	24,060
(6,440)	10,550	14,490	17,880	21,100	24,680
(6,480)	10,620	14,580	18,000	21,240	24,840
(6,490)	10,630	14,590	18,010	21,260	24,860
(6,540)	10,710	14,710	18,150	21,420	25,050
(6,550)	10,740	14,740	18,190	21,470	25,110
(6,660)	10,920	14,990	18,500	21,830	25,530
(6,740)	11,050	15,170	18,720	22,090	25,840
7,430	12,180	16,720	20,640	24,360	28,490
7,930	12,990	17,830	22,010	25,980	30,380
7,960	13,040	17,910	22,100	26,080	30,500
8,600	14,090	19,340	23,870	28,170	32,950

[1] Figures provided in Tables 1–3 of this notice are for a family of four persons. To use Table 4, the appropriate figure should be found in the Family of Four column. Then one may read across the row for family sizes other than four in the appropriate column.

[FR Doc. 93–6596 Filed 3–23–93; 8:45 am]
BILLING CODE 4510–30–M

Occupational Safety and Health Administration

[Docket No. NRTL–2–90]

United States Testing Company, Inc., California Division; Recognition as a Nationally Recognized Testing Laboratory

AGENCY: Occupational Safety and Health Administration, Department of Labor.

ACTION: Notice of recognition as a Nationally Recognized Testing Laboratory.

SUMMARY: This notice announces the Agency's final decision on the California Division of the United States Testing Company, Inc. application for recognition as a Nationally Recognized Testing Laboratory (NRTL) under 29 CFR 1910.7.

FOR FURTHER INFORMATION CONTACT: Office of Variance Determination, NRTL Recognition Program, Occupational Safety and Health Administration, U.S. Department of Labor, Third Street and Constitution Avenue, NW., room N3653, Washington, DC 20210.

SUPPLEMENTARY INFORMATION:

Notice of Final Decision

Notice is hereby given that the United States Testing Company, Inc., California Division (UST/CA), which made application for recognition pursuant to 29 CFR 1910.7, has been recognized as a Nationally Recognized Testing Laboratory for the equipment or material listed below.

The address of the laboratory covered by this recognition is: United States Testing Company, Inc., California Division, 5555 Telegraph Road, Los Angeles, California 90040.

Background

The United States Testing Company, Inc. was founded in 1880 as the New York Silk and Wool Conditioning Works. Over the next 30 years, the company increased its services into other fields of testing and expanded its facilities to other locations along the eastern seaboard. Because of this expansion, in 1910 the company's name was changed to the United States Conditioning and Testing Company. In 1920, the company became incorporated and subsequently changed its name to the United States Testing Company, Inc. Its offices and main laboratories were moved to Hoboken, New Jersey in 1926.

In 1942, the third-party certification program was first established using the Seal of Quality of the United States Testing Company, Inc., and this program achieved nationwide implementation when the California Division was formed in 1953. In 1961, the Federal Trade Commission required the Company to change the name of this certification program to eliminate any possibility of identifying the program with an agency of the United States government. In response to this requirement, the Nationwide Consumer Testing Institute, Inc. (NCTI) was introduced the following year, and its label was registered with the U.S. Patent Office in 1969. (NCTI is a wholly owned subsidiary of the United States Testing Company, Inc.) In 1982, the United States Testing Company, Inc., along with its Nationwide Consumer Testing Institute certification program, was purchased and is now wholly owned and operated by Societe Generale de Surveillance (SGS). In the United States, the SGS affiliates including the United States Testing Company are fully owned and controlled by SGS North America, Inc., which is incorporated in Delaware. UST/CA is headquartered in Hoboken, New Jersey, and its Laboratory Services Group is made up of four additional branches located in different areas of the country. The facility covered by this recognition, the California Division, is located in Los Angeles.

The California Division of the United States Testing Company, Inc., applied to OSHA for recognition as a Nationally Recognized Testing Laboratory in November 1989. The application was subsequently amended and additional data submitted as requested. An on-site evaluation was conducted on February 4, 5 and 6, 1991, and the results discussed with the applicant who responded with appropriate corrective actions and clarifications to recommendations made as a result of the survey (Ex. 3A(2)). The final on-site review report (Ex. 3A(1)) consisting of the on-site evaluation of UST/CA's testing facilities and administrative and technical practices, along with the two letters from UST/CA stating the corrective action it would take in response to these evaluations, and the OSHA staff recommendation, were subsequently forwarded to the Acting Assistant Secretary for a preliminary finding on the application. A notice of UST/CA's application together with a positive preliminary finding were published in the **Federal Register** on March 23, 1992 (56 FR 10045–10047).

There were four responses to the **Federal Register** notice of the UST/CA application and preliminary finding (Docket No. NRTL–2–90). One respondent (EX. 4–1) was concerned that the applicant did not meet the requirements for eligibility of a foreign based testing agency or organization.

OSHA determined that UST/CA did not fall under the category of a "foreign based" entity since it is owned and controlled by SGS North America, Inc., which is incorporated in the state of Delaware.

Another responder (Ex. 4–2 and 4–3)) requested an additional 60 day extension of the comment period to enable it to respond. OSHA granted an extension of 30 days, believing it to be adequate for any additional response. At the end of the thirty day extension, additional comments were received from that respondent (Ex. 4–4). A number of issues were raised that were not directly relevant to the issue of UST/CA meeting the definition of an NRTL as set forth in 29 CFR 1910.7. These comments were general criticisms of the standard. For example, one such comment focused on the need to designate and use a single test standard for each product (EX. 4–4, pp 1–2). This issue had been raised by the same respondent during the rulemaking proceeding and was discussed and resolved in the preamble of the final rule (see 53 FR 12108–09, 4/12/88), as well as **Federal Register** notice of recognition of MET Electrical Testing Company, Inc. (See 54 FR 21136–40, 5/16/89).

Among the specific comments made was one concerning the size of the facility, since the on-site inspection, the electrical test laboratory has been expanded to over five times the area of the previous laboratory which, in OSHA's opinion, is sufficient for its present work load. Two other issues were raised questioning the follow-up program being carried out by the Nationwide Consumer Testing Institute, Inc. (NCTI), and with the name "United States Testing Company, Inc." In reality, the NCTI is not a separate entity, but is a part of United States Testing Company, Inc. As stated above, NCTI is the name the United States Testing Company has used for its listing and labeling program since the early 1960s, when the Federal Trade Commission asked them to change the name to prevent confusion with the federal government or any federal government endorsement. Therefore, the name "United States Testing Company, Inc." will not appear on any product; rather NCTI will.

Concerns were also raised as to assurances that only the Los Angeles facility would be used for the OSHA program. When OSHA initially asked UST/CA which facilities would be involved in testing, it was informed that only the California facility was qualified to, and performed, electrical testing. If, at some later date, UST/CA wishes to use its other facilities to test and certify products under the NRTL program, it will apply to OSHA to do so. The issue of experience in testing products to all of the standards for which UST/CA requested recognition was raised. The requirements of 29 CFR 1910.7 are based upon capability rather than experience, and OSHA has determined that UST/CA has the required capability. Finally, concerns were raised over the lack of formalized test procedures and standard operating procedures (SOPs). Since the time of the on-site investigation, many SOPs for the OSHA/NRTL program have been written. Completed SOPs have been submitted to the NRTL staff for review and have been found to be adequate. One follow-up has already been carried out and additional ones are anticipated. All of the written standard operating procedures, which are a part of the quality assurance program, will be in place before UST/CA will function under the NRTL accreditation program.

The final respondent (Ex. 4–5) attested to the credibility of the applicant, agreed with the positive preliminary finding, and recommended accreditation as an NRTL.

The Occupational Safety and Health Administration has evaluated the entire record in relation to the regulations set out in 29 CFR 1910.7 and makes the following findings:

Capability

Section 1910.7(b)(1) states that for each specified item of equipment or material to be listed, labeled or accepted, the laboratory must have the capability (including proper testing equipment and facilities, trained staff, written testing procedures, and calibration and quality control programs) to perform appropriate testing.

Based upon the on-site review report and the products and standards in question, UST/CA's laboratory has adequate floor space for testing and evaluation and an adequate number of technical and professional personnel to accomplish the services required for the present workload in the areas of recognition it seeks. Moreover, the applicant has stated that since the last on-site investigation the electrical test laboratory has been expanded to over five times the area of the previous laboratory, and that the new facility can accommodate many projects at one time.

The laboratory contains approximately 53,000 square feet of which some 37,000 square feet is dedicated to product testing. Gas, water and electricity are available in the laboratory.

Environmental conditions are monitored and controlled within the laboratory to ensure compliance with the test conditions required in the standards by equipping all temperature-critical rooms with temperature recording apparatus. If any room is not so equipped, and temperature control is required, electronic digital display thermometers are available. Environmental chambers are also available for sample conditioning and testing.

An identification and tracking system is used to ensure that either the sample is destroyed or returned to the client after the tests are completed. Handling precautions are also noted at the time of receipt. Samples are tracked with each department having specific locations for sample storage, however not all samples were located in the sample storage areas. Samples are stored indoors, within the facilities which are secured, alarmed and patrolled, and signed out only to authorized personnel. Some outdoor samples are stored outdoors in secured areas. Samples have been checked and are now located within the designated sample storage areas.

Access to the facility is controlled by key operated locks and enforced with an alarm. During work hours Monday through Friday 8 a.m.–5 p.m., all employees can enter the facility using their assigned key. Visitors are only allowed to enter through the front lobby after being signed in and escorted by an authorized employee.

Only managers and personnel authorized by the General Manager have entry keys to deadbolts that are enabled at night and on week-ends. Before or after hours, entries to the facilities must be scheduled. All entry points, windows, and smoke detectors are connected to the security system. If any unauthorized entry is made, the local sheriff and security company are notified.

The California Division of the United States Testing Company, Inc. consists of some 41 professional or technical employees. The Electrical Department is the only one involved with certification as it applies to OSHA. Seven employees are involved with the program, as follows:

1—Division Manager
1—Electrical Department Supervisor
1—Quality Assurance Coordinator
1—Project Engineer
2—Electrical Engineers
1—Technical Writer

Each employee reports to his or her supervisor/manager. The General

Manager, who oversees all activities, reports directly to the Chief Executive Officer. The Electrical Department Supervisor oversees its activities. The Quality Assurance Coordinator reports to the Division Manager on all QA matters at that location and also takes direction from and has a reporting obligation to the Corporate Quality Assurance Director.

The technical operation of the laboratory is under the direction of the department manager, who reviews the manpower/education requirements for each job before it is assigned to an engineer.

As of the time of the on-site investigation there were no written position descriptions for each job title for personnel involved with product testing and evaluation. The new Quality Policy Manual requires job descriptions.

Training is the responsibility of the department manager although there was no formal training program in place for either present employees or new hires at the time of the on-site investigation. Informal training was handled through various seminars, small scale training (training on one test apparatus at a time), and apprentice projects (one experienced employee leading an apprentice through the various tests one step at a time). The new Quality Policy Manual addresses these training requirements, which are considered to be adequate.

Test equipment is available in the laboratory to perform the testing required by the standards. Special rarely used test equipment not available in the laboratory, is rented from either a primary or secondary source. Current calibration is required before the equipment is rented. A functional test equipment inventory list is included in the Quality Control (QC) Manual. A separate, more detailed master list is available in the plant manager's office and on a computer data base.

Copies of manufacturer's instructions on the proper use of the test equipment along with some of the calibration and repair records for that test equipment, are maintained in the plant manager's office. A list of the calibration and repair records for test equipment used by a department is maintained in each department manager's office.

The test equipment used for evaluation is identified on the laboratory data sheets. A policy exists requiring that if any equipment is later found to be questionable or out of calibration tolerance, all data sheets in that time frame are reviewed. If the questioned equipment was found to be used for a test, that measurement would be repeated. Test equipment which gives suspect results, or has been shown by calibration or otherwise to be defective, is removed from service and calibration data on received condition is requested from the calibration agency for all out of calibration ranges. This policy has been formalized and is in the QC Manual.

The basic calibration procedure is outlined in the QC Manual. Test equipment is normally calibrated on an annual basis unless required or recommended more often by the test equipment manufacturer. The QC Manual also addresses the use of equipment where cost restrictions require supplemental calibrated instrumentation for part or all of the instruments located on the equipment. A label has been developed that specifies the supplemental instruments to use with the equipment.

At the beginning of each month, the Plant Manager prints out a list for each department of the equipment that requires calibration. The Department Manager then schedules the appropriate agency to perform the calibration. Once calibrated, a copy of the certification is given to the Plant Manager for notation in the computer and placement in the equipment file. All newly acquired and repaired test equipment is required to be calibrated prior to use. Test equipment is either calibrated or "red tagged" (marked "not to be used").

On most equipment, a tag identifying the calibration company and calibration date and due date is plainly visible. If not on the equipment, the supervisor is to be notified immediately. Out of service or uncalibrated pieces of equipment may be used with additional calibrated instruments. At the time of the on-site review the noncalibrated equipment was often not tagged or identified and the technicians are trained to know which equipment requires additional instrumentation. Presently, this situation has been corrected and the equipment has been reviewed and appropriately tagged.

The equipment records maintained in the department files show the calibration and repair histories. No in-house calibrations are performed for equipment utilized for data acquisition in the product certification program. Calibrations are done by outside agencies which use NIST traceable standards.

At the time of the on-site review, separate documents of standard operating procedures were not used for processing applications. The standard(s) chosen and a checklist stating the applicable sections/tests is, in many instances, used for guiding the engineer through the investigation. However, Standard Operating Procedures have since been developed and will be in place prior to listing a product under the OSHA/NRTL Program.

Many of the test standards for which U.S. Testing seeks recognition require a subjective evaluation of the product with respect to meeting the various sections of the standard. At the time of the on-site investigation there was no written procedure that addressed the steps in an investigation, a process of when and how interpretations of conformance to sections of the standard can be made, and what minimum documentation is required to comply with the standard. The Standard Operating Procedures now address interpretations.

Checklists that have been developed, reviewed, and maintained by the department manager and laboratory supervisor, are used by the laboratory personnel. The appropriate standard(s) to be used to evaluate a particular product are determined by the product category and a review of all ANSI or UL cross references.

Creditable Reports/Complaint Handling

Section 1910.7(b)(4) provides that an OSHA recognized NRTL must maintain effective procedures for producing creditable findings and reports that are objective and without bias. The laboratory, in order to be recognized, must also maintain effective procedures for handling complaints under a fair and reasonable system.

Disagreements between the applicant and the laboratory concerning the applicability of a particular standard are initially resolved through communicating the reasons for the choice. A procedure for settling disputes is outlined in the "NCTI Listing and Labeling Procedure Manual". Under this corporate system, the UST/CA is also capable of handling inquiries or complaints from the general public, inspection authorities, and government agencies; it is not limited to solving disputes between the client and the laboratory.

The laboratory maintains a system for identifying product samples submitted for testing to ensure that there is no confusion regarding the identity of the samples. Samples checked were marked and segregated.

Previously, UST/CA had no formal method for developing interpretations to sections of the standards. Informally, the department manager and the laboratory supervisor, upon review of the tests, developed interpretations as required. Interpretations or policy decisions were stated on the check list. A formal written policy for developing

and creating Standard Operating Procedures (SOPs), including interpretations, has been prepared and will be in place prior to listing any product under the OSHA/NRTL program.

The test standard is used to develop the test procedure. Each procedure is then outlined in a test report which is used for future reference and guidance when evaluating similar products. Test reports without reference to the particular client data/information and sample identification are available to the engineer from a computer file.

The reference section of the test report identifies the standard or standards used and the appropriate dates. The test procedure also refers to the standard with the number or name of the appropriate section.

Newer test report files reviewed contained (1) Job Ticket (typed and original), (2) correspondence relating to the job, (3) telephone discussion and conference documentation, (4) data sheets generated by the engineer(s) including charts and printout of test equipment when applicable, (5) documentation provided from the client including operating, instruction and service manuals, (6) product brochures if submitted, (7) client purchase orders and (8) invoices to the client. A standard file format procedure was developed and implemented several years ago.

Test reports contained a detailed description of the product. Drawings and specifications to which the listed product was manufactured are now required prior to the start of an investigation.

Test reports, containing the description of the testing performed on the product and the results of those tests, are prepared by the engineer assigned to the project and reviewed by the department manager and laboratory supervisor for technical content. Also, during the last several years, new policies for reporting and file maintenance have been developed which assist UST/CA in producing creditable findings.

The laboratory, under the direction and control of the department manager, maintains a subscription service for the standards used in the certification process. A formal system for archiving standards has been implemented.

All Nationwide Consumer Testing Institute, Inc. (NCTI) documents (including reports, invoices, data sheets, and phone conversation summaries) are filed in fire resistant file cabinets which are locked when not in use. A manual for each listing and labeling program is generated which includes the requirements for compliance, basic program description, copies of Initial Facility Inspections and Qualification Reports, list of products labeled, quality assurance requirements and basic history or other information deemed important to the program. One copy is accessible in the electrical laboratory area and another copy is provided to the client (without the special notations) for their reference. The original documentation, stored in the fire-resistant cabinets at UST/CA, could be utilized to create additional manuals.

Test reports and records are distributed to clients only. The NCTI Blue Book of Listed Products includes all currently listed products. The department manager has the prime responsibility for the maintenance of these records.

UST/CA is updating their quality assurance manual based on the ANSI/ASQC Q90 Standard. A prototype manual has been developed. A final manual and its implementation will be available before listing under the OSHA/NRTL program.

The Quality Assurance Coordinator is responsible for the Quality Assurance Program. The QA program is reviewed at least once per year.

The Division does not have a formal internal quality assurance auditing system in place. The new corporate system currently under development will address the internal audit. Currently, two programs fulfill a portion of the goals of an internal audit:

(1) The Corporate Responsibility Program—a direct and anonymous pipeline to corporate management for reporting suspected improper conduct or deviation from procedures. All alleged improper conduct is immediately investigated by the Director of Corporate Responsibility, who reports any findings directly to the Chief Executive Officer with appropriate recommendations; and

(2) The Integrated Quality Program—a program, implemented in 1987, with a process similar to that of the Total Quality Management or Quality Circles Program that is designed to promote Quality Awareness and involvement of all personnel in the efficiency and accuracy of the operation. This program is documented in the "IQP Awareness Guide".

Internal procedures and an auditing of these procedures would have identified a product that was not removed from the listing catalog after problems were discovered by the laboratory engineers. The new Quality Policy Manual addresses this type of auditing procedure.

The laboratory participates in round robin testing with other laboratories as part of other certification programs and with laboratories within the parent company's organizational structure. This provides additional independent monitoring of the laboratory's capability in the testing areas.

Type of Testing

The standard contemplates that testing done by NRTLs fall into one of two categories: Testing to determine conformance with appropriate test standards, or experimental testing where there might not be one specific test standard covering the new product or material. UST/CA has applied for recognition in the first category.

Follow-Up Procedures

Section 1910.7(b)(2) requires that the NRTL provide certain follow-up procedures to the extent necessary for the particular equipment or material to be listed, labeled, or accepted. These include implementation of control procedures for identifying the listed or labeled equipment or materials, inspecting the production run at factories to assure conformance with test standards, and conducting field inspections to monitor and assure the proper use of the label.

The follow-up program enables UST/CA to review the client's quality assurance program implementation and to perform selective retesting. These follow-up inspections are performed a minimum of four times per year. During each visit the inspector reviews the client's quality assurance records and procedures. Variations are recorded along with such information as personnel contacts, personnel changes, production changes, and facility changes. When required by the test program, a sample is selected at random during the inspection.

Noncompliance or discrepancies are classified at four levels, each with a defined response time and plan of action. Termination or suspension of listing or labeling follows a specified procedure that insures that necessary steps are taken.

A formal field auditing system has been added to the NCTI Listing Manual. NCTI labels are serialized by the product's serial number or by a separate numbering system. The production records for each client are reviewed during inspection and each label accounted for.

Independence

Section 1910.7(b)(3) requires that an NRTL be completely independent of employers subject to the tested

equipment requirements and of any manufacturer or vendors of equipment or materials being tested. The applicant stated in its application that it is in complete compliance with this requirement.

Based upon an examination of the application and discussions with executives of the UST/CA, OSHA has determined that the California Division of the United States Testing Company, Inc., is in compliance with the requirements of § 1910.7(b)(3).

Test Standards

Section 1910.7 requires that an NRTL use "appropriate test standards", which are defined, in part, to include any standard that is currently designated as an ANSI safety designated product standard. Many of the test standards which UST/CA wishes to use are ANSI/UL standards which are acceptable under § 1910.7(c)(4). As to the non-ANSI UL test standards for which UST/CA has applied to test products to, OSHA previously had examined the status of the Underwriters Laboratories Inc. (UL) Standards for Safety and, in particular, the method of their development, revision and implementation, and had determined that they are appropriate test standards under the criteria described in 29 CFR 1910.7(c)(1), (2), and (3). That is, these standards specify the safety requirements for specific equipment or classes of equipment and are recognized in the United States as safety standards providing adequate levels of safety; they are compatible and remain current with periodic revisions of applicable national codes and installation standards; and they are developed by a standards developing organization under a method providing for input and consideration of views of industry groups, experts, users, consumers, governmental authorities, and others having broad experience in the safety fields involved.

Final Decision and Order

Based upon a preponderance of the evidence resulting from an examination of the complete application, the supporting documentation, and the OSHA staff finding including the on-site report, OSHA finds that the United States Testing Company, Inc., California Division, has met the requirements of 29 CFR 1910.7 to be recognized by OSHA as a Nationally Recognized Testing Laboratory to test and certify certain equipment or materials.

Pursuant to the authority in 29 CFR 1910.7, the United States Testing Company, Inc., California Division is hereby recognized as a Nationally Recognized Testing Laboratory subject to the conditions listed below. This recognition is limited to equipment or materials which, under 29 CFR part 1910, require testing, listing, labeling, approval, acceptance, or certification, by a Nationally Recognized Testing Laboratory. This recognition is limited to the use of the following test standards for the testing and certification of equipment or materials included within the scope of these standards.

UST/CA has stated that all the standards in these categories are used to test equipment or materials which may be used in environments under OSHA's jurisdiction. These standards are all considered appropriate test standards under 29 CFR 1910.7(c):

ANSI/UL 1—Flex Metal Conduit
ANSI/UL 3—Flexible Nonmetallic Tubing for Electric Wiring
ANSI/UL 250—Household Refrigerators and Freezers
ANSI/UL 514A—Metallic Outlet Boxes, Electrical
UL 544—Electric Medical and Dental Equipment
ANSI/UL 632—Electrically Actuated Transmitters
ANSI/UL 751—Vending Machines
ANSI/UL 913—Intrinsically Safe Apparatus and Associated Apparatus for Use in Class I, II, and III, Division I, Hazardous (Classified) Locations
ANSI/UL 1012—Power Supplies
UL 1236—Electrical Battery Chargers
UL 1270—Radio Receivers, Audio Systems, and Accessories
ANSI/UL 1418—Implosion-Protected Cathode-Ray Tubes for Television-Type Appliances
UL 1459—Telephone Equipment
ANSI/UL 1484—Residential Gas Detectors
ANSI/UL 1571—Incandescent Lighting Fixtures
UL 1604—Electrical Equipment for Use in Class I and II, Division 2 and Class III Hazardous (Classified) Locations

The United States Testing Company, Inc., California Division must also abide by the following conditions of its recognition, in addition to those already required by 29 CFR 1910.7:

This recognition does not apply to any aspect of any program which is available only to qualified manufacturers and based upon the NRTL's evaluation and accreditation of the manufacturer's quality assurance program;

The Occupational Safety and Health Administration shall be allowed access to UST/CA's facilities and records for purposes of ascertaining continuing compliance with the terms of its recognition and to investigate as OSHA deems necessary;

UST/CA's Quality Assurance Program for the Electrical Department shall conform to ANSI/ASQC Q90 before any product is certified under the NRTL program;

Written Standard Operating Procedures for the Electrical Department of UST/CA will be in place before any product is certified under the NRTL program;

If UST/CA has reason to doubt the efficacy of any test standard it is using under this program, it shall promptly inform the test standard developing organization of this fact and provide that organization with appropriate relevant information upon which its concerns are based;

UST/CA shall not engage in or permit others to engage in any misrepresentation of the scope or conditions of its recognition. As part of this condition, UST/CA agrees that it will allow no representation that it is either a recognized or an accredited Nationally Recognized Testing Laboratory (NRTL) without clearly indicating the specific equipment or material to which this recognition is tied, or that its recognition is limited to certain products;

UST/CA shall inform OSHA as soon as possible, in writing, of any change of ownership or key personnel, including details;

UST/CA will continue to meet the requirements for recognition in all areas where it has been recognized; and

UST/CA will always cooperate with OSHA to assure compliance with the letter as well as the sprint of its recognition and 29 CFR 1910.7.

EFFECTIVE DATE: This recognition will become effective on March 23, 1993, and will be valid for a period of five years from that date, until March 23, 1998, unless terminated prior to that date, in accordance with 29 CFR 1910.7.

Signed at Washington, DC this 17th day of March 1993.

David C. Zeigler,

Acting Assistant Secretary.

[FR Doc. 93-6595 Filed 3-22-93; 8:45 am]

BILLING CODE 4510-26-M

NATIONAL ARCHIVES AND RECORDS ADMINISTRATION

Research room user response form; proposed information collection submission

AGENCY: National Archives and Records Administration.

ACTION: Notice of proposed information collection submitted to OMB for approval.

SUMMARY: The National Archives and Records Administration (NARA) is

submitting a proposed collection of information to the Office of Management and Budget for approval under the Paperwork Reduction Act and 5 CFR part 1320.

The information collection is a form for the public to use to register their suggestions, complaints or compliments about the reference service received in a National Archives research room in the Washington, DC, area. The purpose of the information collection is to obtain user views about NARA's reference services and problems with these services. The form would be made available in the research room to be completed on a voluntary basis. Individuals would deposit their forms in a box provided in the research room or mail the response to NARA. The form has been designed as a self-mailer. We estimate that 3,000 forms would be completed over a 1-year period. We estimate that each response will take approximately 5 minutes. The information will assist NARA in planning and improving reference services and in correcting specific problems to our attention.

DATES: NARA invites the public to comment on the proposed information collection. Comments should be submitted by April 22, 1993.

ADDRESSES: Copies of the proposed information collection and supporting documentation can be obtained from the Program Planning and Congressional Liaison Division (NARA), room 409, National Archives Building, 7th and Pennsylvania Avenue, NW., Washington, DC 20408. Telephone requests may be made to (202) 501-5110.

Comments should be sent to Director, Program Planning and Congressional Liaison Division (NARA), National Archives and Records Administration, Washington, DC 20408. A copy of the comments should be sent to the Office of Information and Regulatory Affairs, Office of Management and Budget, Attention: Desk Officer for NARA, Washington, DC 20503.

FOR FURTHER INFORMATION CONTACT: Mary Ann Palmos or Nancy Allard at (202) 501-5110.

Dated: March 11, 1993.

Don W. Wilson,

Archivist of the United States.

[FR Doc. 93-6569 Filed 3-22-93; 8:45 am]

BILLING CODE 7515-01-M

NUCLEAR REGULATORY COMMISSION

Nuclear Safety Research Review Committee; Meeting

The Nuclear Safety Research Review Committee (NSRRC) will hold its next meeting on April 28-29, 1993, in the Palladian Center at the Chevy Chase Holiday Inn, 5520 Wisconsin Avenue, Chevy Chase, MD. The meeting will be held in accordance with the requirements of the Federal Advisory Committee Act (FACA) and will be open to public attendance. The NSRRC provides advice to the Director of the Office of Nuclear Regulatory Research (RES) on matters of overall management importance in the direction of the NRC's program of nuclear safety research. The purpose of this meeting is to review the status of information and research on nondestructive examination (NDE) of steam generator tubes and the pertinent background of technology and practice.

The planned schedule is as follows:

Wednesday, April 28, 1993

9:30 a.m.-9:45 a.m.: Opening remarks: NSRRC Chairman, RES Director.

9:45 a.m.-12 noon: Background and overview.

General background of the different steam generator designs employed in pressurized-water-reactor nuclear power plants and the types of damage experienced over the years for different generators. Theory of eddy current testing as applied to steam generator tube inspections; NDE methods, procedures, equipment, and personnel used; practical aspects and logistics for conducting these inspections.

1:15 p.m.-5:30 p.m.: Current practices.

Discussion by providers of inspection services. Current steam generator tube inspection practices; advantages and disadvantages of the techniques; reliability of flaw detection and accuracy of flaw sizing; experiences and findings from field inspections.

5:30 p.m.-6 p.m.: Committee discussion.

Thursday, April 29, 1993

8:30 a.m.-11:45 a.m.: Research programs and results.

Recent, current, and future research programs and results related to improvements for nondestructive testing of steam generator tubes. NRC Independent Measurements Program; activities of the NDE mobile laboratory.

1 p.m.-4 p.m.: Emerging technologies.

Emerging methods and technology that may provide improvements for inspections in the near term and in the future.

4 p.m.-4:30 p.m.: Panel discussion.

NDE issues, including the strengths and weaknesses of current methods, potential improvements and future research projects.

4:30 p.m.-6 p.m.: Committee discussion.

Participants in the presentations to and discussions with the Committee will include representatives of the NRC staff, industry, and research organizations.

Members of the public may file written statements regarding any matter to be discussed at the meeting. Members of the public may also make requests to speak at the meeting, but permission to speak will be determined by the Committee chairperson in accordance with procedures established by the Committee. A verbatim transcription will be made of the NSRRC meeting and a copy of the transcript will be placed in the NRC's Public Document Room in Washington, DC.

Inquiries regarding this notice, any subsequent changes in the status and schedule of the meeting, the filing or written statements, requests to speak at the meeting, or for the transcript, may be made to the Designated Federal Officer, Mr. George Sege (telephone: 301/492-3904), between 8:15 a.m. and 5 p.m.

Dated: March 18, 1993.

John C. Hoyle,

Advisory Committee Management Officer.

[FR Doc. 93-6575 Filed 3-22-93; 8:45 am]

BILLING CODE 7590-01-M

[Docket No. 50-193]

Order Modifying License

In the Matter of Rhode Island Atomic Energy Commission (Rhode Island Nuclear Science Center Research Reactor).

I.

The Rhode Island Atomic Energy Commission (the licensee) is the holder of Facility Operating License No. R-95 (the license) issued on July 21, 1964, by the U.S. Atomic Energy Commission. The license, as amended by Amendment No. 1 on September 10, 1968, authorizes operation of the Rhode Island Nuclear Science Center Research Reactor (the facility) at a power level up to 2 megawatts (Mw) thermal (t). The facility is a research reactor located in the Narragansett Bay Campus of the University of Rhode Island (formerly called Fort Kearney) in Narragansett, Rhode Island. The research reactor is contained in the Rhode Island Nuclear Science Center, which is located on the south central portion of the Narangansett Bay Campus. The mailing address is Nuclear Science Center, Rhode Island Atomic Energy Commission, South Ferry Road, Narragansett, Rhode Island 02882-1197.

II.

On February 25, 1986, the U.S. Nuclear Regulatory Commission (NRC

or the Commission) promulgated a final rule in Section 50.64 of Title 10 of the Code of Federal Regulations (10 CFR 50.64) limiting the use of high-enriched uranium (HEU) fuel in domestic research and test reactors (non-power reactors) (see 51 FR 6514). The rule, which became effective on March 27, 1986, requires that each licensee of a non-power reactor replace HEU fuel at its facility with low-enriched uranium (LEU) fuel acceptable to the Commission (1) unless the Commission has determined that the reactor has a unique purpose and (2) contingent upon Federal Government funding for conversion-related costs. The Commission issued the rule to promote the common defense and security by reducing the risk of theft and diversion of HEU fuel used in non-power reactors.

Sections 50.64(b)(2)(i) and (ii) require that a licensee of a non-power reactor (1) not initiate acquisition of additional HEU fuel, if LEU fuel that is acceptable to the Commission for that reactor is available when the licensee proposes that acquisition, and (2) replace all HEU fuel in its possession with available LEU fuel acceptable to the Commission for that reactor in accordance with a schedule determined pursuant to 10 CFR 50.64(c)(2).

Section 50,64(c)(2)(i) requires, among other things, that each licensee of a non-power reactor authorized to possess and to use HEU fuel, to develop and to submit to the Director of the Office of Nuclear Reactor Regulation (Director) by March 27, 1987, and at 12-month intervals thereafter, a written proposal (proposal) for meeting the requirements of the rule.

Section 50.64(c)(2)(i) also requires the licensee to include the following in its proposal: (1) A certification that Federal Government funding for conversion is available through the U.S. Department of Energy (DOE) or other appropriate Federal agency and (2) a schedule for conversion, based upon availability of replacement fuel acceptable to the Commission for that reactor and upon consideration of other factors such as the availability of shipping casks, implementation of arrangements for available financial support, and reactor usage.

Section 50.64(c)(2)(iii) requires the licensee to include in the proposal, to the extent required to effect conversion, all necessary changes to the license, to the facility, and to licensee procedures. This paragraph also requires the licensee to submit supporting safety analyses so as to meet the schedule established for conversion.

Section 50.64(c)(2)(iii) also requires the Director to review the licensee proposal, to confirm the status of Federal Government funding, and to determine a final schedule, if the licensee has submitted a schedule for conversion.

Section 50.64(c)(3) requires the Director to review the supporting safety analyses and to issue an appropriate enforcement order directing both the conversion and, to the extent consistent with protection of the public health and safety, any necessary changes to the license, the facility and licensee procedures. In the **Federal Register** notice of the final rule, the Commission explained that in most cases, if not all, the enforcement order would be an order to modify the license under 10 CFR 2.204 (see 51 FR 6514).

Section 2.204 provides, among other things, that the Commission may modify a license by issuing an amendment on notice to the licensee that it may demand a hearing with respect to any part or all of the amendment within 20 days from the date of the notice or such longer period as the notice may provide. The amendment will become effective on the expiration of this 20-day-or-longer period. If the licensee requests a hearing during this period, the amendment will become effective on the date specified in an order made after the hearing.

Section 2.714 states the requirements for a person whose interest may be affected by any proceeding to initiate a hearing or to participate as a party.

III.

On November 18, 1991, as supplemented on July 23, 1992, December 22, 1992, and January 13, 1993, the NRC staff received the licensee proposal, including its proposed modifications, supporting safety analyses, and plans for conversion. The conversion consists of replacing high-enriched with low-enriched uranium fuel elements. The fuel elements contain materials test reactor (MTR)-type fuel plates, with the fuel meat consisting of uranium silicide dispersed in an aluminum matrix. These plates contain an enrichment of less than 20 percent with the uranium-235 isotope. The NRC staff reviewed the licensee proposal and the requirements of 10 CFR 50.64 and has determined that the public health and safety and the common defense and security require the licensee to convert the facility from the use of HEU to LEU fuel in accordance with the Attachment to this Order and the schedular requirements included herein following. The Attachment to this Order specifies the changes to the license conditions and discusses the changes to Technical Specifications that are needed to amend the facility license.

IV.

Accordingly, pursuant to Sections 51, 53, 57, 101, 104, 161b., 161i., and 161o. of the Atomic Energy Act of 1954, as amended, and to Commission regulations in 10 CFR 2.204 and Section 50.64, *It Is Hereby Ordered That:*

Facility Operating License No. R-95 is modified by amending the license conditions and Technical Specifications as stated in the Attachment to this Order on the later date of either (1) the day the licensee receives an adequate number and type of LEU fuel elements that are necessary to operate the facility as specified in the licensee proposal or (2) 30 days after the date of publication of this Order in the **Federal Register.**

V.

Pursuant to the Atomic Energy Act of 1954, as amended, the licensee or any other person adversely affected by this Order may request a hearing within 30 days of the date of this Order. Any request for a hearing shall be submitted to the Director, Office of Nuclear Reactor Regulation, U.S. Nuclear Regulatory Commission, Washington, DC 20555, with a copy to the Assistant General Counsel for Hearings and Enforcement at the same address. If a person other than the licensee requests a hearing, that person shall set forth with particularity in accordance with 10 CFR 2.714 the manner in which their interest is adversely affected by this Order.

If a hearing is requested by the licensee or a person whose interest is adversely affected, the Commission shall issue an order designating the time and place of any hearing. If a hearing is held, the issue to be considered at such hearing is whether this Order should be sustained.

This Order shall become effective on the later date of either the day the licensee receives an adequate number and type of LEU fuel elements that are necessary to operate the facility as specified in the licensee proposal or 30 days after the date of publication of this Order in the **Federal Register** or, if a hearing is requested, on the date specified in an order after further proceedings on this Order.

Dated at Rockville, Maryland this 17th day of March 1993.

For the Nuclear Regulatory Commission.

Thomas E. Murley,

Director, Office of Nuclear Reactor Regulation.

Attachment to Order Modifying Facility Operating License No. R-95

A. License Conditions Revised and Added by this Order

2.b. Pursuant to the Act and 10 CFR part 70, "Special Nuclear Material," to receive, possess, and use at any one time up to 10.4 kilograms of contained uranium-235 at enrichments equal to or less than 20 percent in the form of MTR-type reactor fuel in connection with operation of the reactor and up to 32 grams of plutonium encapsulated in two plutonium-beryllium neutron sources for reactor startup.

2.d. Pursuant to the Act and 10 CFR part 70, "Special Nuclear Material," to possess, but not use, up to 8.0 kilograms of contained uranium-235 at greater than 20 percent enrichment in the form of MTR-type reactor fuel until the existing inventory of this fuel is removed from the facility.

3.b. *Technical Specifications:*

The Technical Specifications contained in appendix A, as revised through Amendment No. 17, are hereby incorporated in the license. The licensee shall operate the facility in accordance with the Technical Specifications.

3.d.(4) The licensee shall provide a startup test report within six months after initial criticality with low enriched uranium reactor fuel in accordance with Amendment No. 17. This report shall be sent as specified in 10 CFR 50.4 Written Communications.

B. The Technical Specifications will be revised by this Order in accordance with the "Enclosure to License Amendment No. 17, Facility Operating License No. R-95, Docket No. 50-193, Replacement Pages for Technical Specifications," and as discussed in the Safety Evaluation for this Order.

[FR Doc. 93-6576 Filed 3-22-93; 8:45 am]

BILLING CODE 7590-01-M

OFFICE OF MANAGEMENT AND BUDGET

Office of Federal Procurement Policy

Procurement Regulatory Activity Report Availability

AGENCY: Office of Management and Budget, Office of Federal Procurement Policy.

ACTION: Notice of availability of the Procurement Regulatory Activity Report, Number 8.

SUMMARY: Subsections 25(g) (1) and (2) of the Office of Federal Procurement Policy (OFPP) Act, as amended by Public Law 100-679, codified at 41 U.S.C. 421(g), require the Administrator for Federal Procurement Policy to publish a report within six months after the date of enactment and every six months thereafter relating to the development of procurement regulations.

Accordingly, OFPP has prepared the eighth Procurement Regulatory Activity Report. This report is designed to satisfy all aspects of subsections 25(g) (1) and (2) of the OFPP Act, and includes information on the status of each regulation; a description of those regulations required by statute; a description of the methods by which public comment was sought; regulations, policies, procedures, and forms under review by the OFPP; whether the regulations have paperwork requirements; the progress made in promulgating and implementing the Federal Acquisition Regulation; and such other matters as the Administrator determines to be useful.

ADDRESSES: Those persons interested in obtaining a copy of the Procurement Regulatory Activity Report may contact the Executive Office of the President Publications Service, Room 2200, 725 17th Street, NW, Washington, DC 20503, or phone (202) 395-7332.

ADDITIONAL INFORMATION: For additional information write or call the Office of Federal Procurement Policy, 725 17th St., NW, Washington, DC 20503 (202) 395-6803.

Dated: March 16, 1993.

Allan V. Burman,

Administrator.

[FR Doc. 93-6548 Filed 3-22-93; 8:45 am]

BILLING CODE 3110-01-M

SECURITIES AND EXCHANGE COMMISSION

[Release No. 34-32005; File No. SR-PHLX-92-41]

Self-Regulatory Organizations; Notice of Filing and Immediate Effectiveness of Proposed Rule Change by the Philadelphia Stock Exchange, Inc. Relating to the Revision of the Transaction Value Charge

March 16, 1993.

Pursuant to Section 19(b)(1) of the Securities Exchange Act of 1934 ("Act"), 15 U.S.C. 78s(b)(1), notice is hereby given that on December 18, 1992, the Philadelphia Stock Exchange, Inc. ("PHLX" or "Exchange") filed with the Securities and Exchange Commission ("Commission") the proposed rule change as described in Items I, II and III below, which Items have been prepared by the PHLX.[1] The Commission is publishing this notice to solicit comments on the proposed rule change from interested persons.

I. Self-Regulatory Organization's Statement of the Terms of Substance of the Proposed Rule Change

Effective at the opening of business on January 4, 1993, the PHLX proposes to amend its Schedule of Dues, Fees and Charges by eliminating the Transaction Value Charge of $.13 per $1,000 for market makers, firms, and customers, and instituting the Option Comparison Charge. The Option Comparison Charge imposes fees of $.03 per contract for Registered Options Traders ("ROTs") for their proprietary executions, and $.04 per contract for member organizations for their proprietary executions and those undertaken for the benefit of their customers. The PHLX's specialists are exempt from the Option Comparison Charge. The Exchange's Option Transaction Charge will remain unchanged.

The text of the proposed rule change is available at the office of the Secretary, PHLX, and at the Commission.

II. Self-Regulatory Organization's Statement of the Purpose of, and Statutory Basis for, the Proposed Rule Change

In its filing with the Commission, the PHLX included statements concerning the purpose of and basis for the proposed rule change and discussed any comments it received on the proposed rule change. The text of these statements may be examined at the places specified in Item IV below. The PHLX has prepared summaries, set forth in sections (A), (B), and (C) below, of the most significant aspects of such statements.

(A) Self-Regulatory Organization's Statement of the Purpose of, and the Statutory Basis for, the Proposed Rule Change

Effective at the opening of business on January 4, 1993, the PHLX proposes to

[1] On January 29, 1993, the PHLX amended its proposal to indicate that the proposed rule change would become effective as of the opening of business on January 4, 1993, and to replace all references to "market makers" with the term "Registered Options Trader" ("ROT"). *See* letter from Ricki Goodstein, Staff Counsel, PHLX, to Sharon Lawson, Assistant Director, Division of Market Regulation, Commission, dated January 27, 1993. On March 11, 1993, the PHLX amended its proposal to clarify the application of the proposed fees. See File No SR-PHLX-92-41, Amendment No. 1.

amend its Schedule of Dues, Fees and Charges by eliminating the Transaction Value Charge of $.13 per $1,000 for market makers, firms, and customers, and instituting the Option Comparison Charge, which imposes fees of $.03 per contract for ROTs for their proprietary executions, and $.04 per contract for member organizations for their proprietary executions and those undertaken on behalf of their customers. The PHLX's specialists are exempt from the Option Comparison Charge, and the Exchange's Option Transaction Charge remains unchanged.

The purpose of the proposal is to amend the PHLX's Schedule of Fees and Charges. The revisions reflect the PHLX's intention to make ROT and member organization fees conform to industry standards and to simplify the Exchange's rules. In this regard, the revisions constitute separate fees assessed to ROTs from those assessed to member organization for their proprietary executions as well as those executed on behalf of their customers. In authorizing the fee changes, the PHLX states that it will create a fee schedule comparable to the fee schedules adopted by other exchanges.

In addition, the PHLX explains that its previous rate schedule required cumbersome calculations of rates per $1,000 based upon premium amount. The new schedule eliminates this calculation by instituting a per contract charge. The PHLX has structured the new fee to simplify the billing of member organizations and ROTs. The PHLX believes that the simplification provided by the institution of a per contract charge will enable brokers to more readily ascertain their fees and charges.

The PHLX believes that the proposal is consistent with section 6(b)(4) of the Act in that it provides for the equitable allocation of reasonable dues, fees and other charges among the Exchange's members and other persons using its facilities.

(B) Self-Regulatory Organization's Statement on Burden on Competition

The PHLX does not believe that the proposed rule change will impose any inappropriate burden on competition.

(C) Self-Regulatory Organization's Statement on Comments on the Proposed Rule Change Received from Members, Participants or Others

No written comments were either solicited or received.

III. Date of Effectiveness of the Proposed Rule Change and Timing for Commission Action

Because the foregoing rule change establishes or changes a due, fee or other charge imposed by the Exchange, it has become effective pursuant to section 19(b)(3)(A) of the Act and subparagraph (e) of rule 19b–4 thereunder. At any time within 60 days of the filing of the proposed rule change, the Commission may summarily abrogate such rule change if it appears to the Commission that such action is necessary or appropriate in the public interest, for the protection of investors, or otherwise in furtherance of the purposes of the Act.

IV. Solicitation of Comments

Interested persons are invited to submit written data, views and arguments concerning the foregoing. Persons making written submissions should file six copies thereof with the Secretary, Securities and Exchange Commission, 450 Fifth Street, NW., Washington, DC 20549. Copies of the submission, all subsequent amendments, all written statements with respect to the proposed rule change that are filed with the Commission, and all written communications relating to the proposed rule change between the Commission and any person, other than those that may be withheld from the public in accordance with the provisions of 5 U.S.C. 552, will be available for inspection and copying in the Commission's Public Reference Section, 450 Fifth Street, NW., Washington, DC 20549. Copies of such filing will also be available for inspection and copying at the principal office of the Exchange. All submissions should refer to the file number in the caption above and should be submitted by April 13, 1993.

By the Commission, by the Division of Market Regulation, pursuant to delegated authority.

Margaret H. McFarland,

Deputy Secretary.

[FR Doc. 93–6586 Filed 3–22–93; 8:45 am]

BILLING CODE 8010–01–M

SMALL BUSINESS ADMINISTRATION

[Declaration of Disaster Loan Area #2623; Amdt. 3]

Arizona; Declaration of Disaster Loan Area

The above-numbered Declaration is hereby amended, in accordance with a Presidential amendment dated March 6, 1993, to establish the incident period for this disaster as beginning on January 5 and continuing through March 6, 1993.

All other information remains the same, i.e., the termination date for filing applications for physical damage is March 22, 1993 and October 19, 1993 for economic injury.

(Catalog of Federal Domestic Assistance Program Nos. 59002 and 59008).

Dated: March 11, 1993.

Bernard Kulik,

Assistant Administrator for Disaster Assistance.

[FR Doc. 93–6545 Filed 3–22–93; 8:45 am]

BILLING CODE 8025–01–M

[Declaration of Disaster Loan Area #2629; Amdt. 3]

California; Declaration of Disaster Loan Area

The above-numbered Declaration is hereby amended, in accordance with a Presidential amendment dated March 4, 1993, to reflect the incident period for this disaster as beginning on January 5, 1993, and continuing.

All other information remains the same, i.e., the termination date for filing applications for physical damage is April 5, 1993 and November 3, 1993 for economic injury.

(Catalog of Federal Domestic Assistance Program Nos. 59002 and 59008).

Dated: March 11, 1993.

Bernard Kulik,

Assistant Administrator for Disaster Assistance.

[FR Doc. 93–6546 Filed 3–22–93; 8:45 am]

BILLING CODE 8025–01–M

[Declaration of Disaster Loan Area #2633]

Georgia (and Contiguous Counties in Alabama); Declaration of Disaster Loan Area

As a result of the President's major disaster declaration on March 4, 1993, I find that the Counties of Bartow, Cobb, Hall, Heard, Meriwether, Pike, Polk, and Walton in the State of Georgia constitute a disaster area as a result of damages caused by tornadoes, high wind, and heavy rain which occurred on February 21–22, 1993. Applications for loans for physical damage may be filed until the close of business on May 3, 1993, and for loans for economic injury until the close of business on December 6, 1993, at the address listed below: U.S. Small Business Administration, Disaster Area 2 Office, One Baltimore Place, Suite 300, Atlanta, Georgia 30308, or other locally announced locations. In addition, applications for economic

injury loans from small businesses located in the contiguous Counties of Banks, Barrow, Carroll, Cherokee, Coweta, Dawson, Douglas, Fayette, Floyd, Forsyth, Fulton, Gordon, Gwinnett, Habersham, Haralson, Harris, Jackson, Lamar Lumpkin, Morgan, Newton, Oconee, Paulding, Pickens, Rockdale, Spalding, Talbot, Troup, Upson, and White in the State of Georgia and Cherokee, Cleburne, and Randolph Counties in the State of Alabama may be filed until the specified date at the above location.

The interest rates are:

	Percent
For Physical Damage:	
Homeowners With Credit Available Elsewhere	8.000
Homeowners Without Credit Available Elsewhere	4.000
Businesses With Credit Available Elsewhere	8.000
Businesses and Non-Profit Organizations Without Credit Available Elsewhere	4.000
Others (Including Non-Profit Organizations) With Credit Available Elsewhere	7.625
For Economic Injury:	
Businesses and Small Agricultural Cooperatives Without Credit Available Elsewhere	4.000

The number assigned to this disaster for physical damage is 263312 and for economic injury the numbers are 787300 for Georgia and 787400 for Alabama.

(Catalog of Federal Domestic Assistance Program Nos. 59002 and 59008.)

Dated: March 11, 1993.

Bernard Kulik,

Assistant Administrator for Disaster Assistance.

[FR Doc. 93-6547 Filed 3-22-93; 8:45 am]

BILLING CODE 8025-01-M

DEPARTMENT OF TRANSPORTATION

Federal Aviation Administration

Acceptance of Noise Exposure Maps; Palo Alto Airport, Palo Alto, CA

AGENCY: Federal Aviation Administration, DOT.

ACTION: Notice.

SUMMARY: The Federal Aviation Administration (FAA) announces its determination that the noise exposure maps submitted by the County of Santa Clara, California, for Palo Alto Airport under the provisions of Title I of the Aviation Safety and Noise Abatement Act of 1979 (Public Law 96-193) and 14 CFR part 150 are in compliance with applicable requirements.

EFFECTIVE DATE: The effective date of the FAA's determination on the noise exposure maps is March 10, 1993.

FOR FURTHER INFORMATION CONTACT: Joseph R. Rodriguez, Planning & Programming Officer, Federal Aviation Administration, San Francisco Airports District Office, 831 Mitten Road, Burlingame, California 94010-1303, Telephone (415) 876-2805.

SUPPLEMENTARY INFORMATION: This notice announces that the FAA finds that the noise exposure maps submitted for Palo Alto Airport are in compliance with applicable requirements of part 150, effective March 10, 1993.

Under section 103 of the Aviation Safety and Noise Abatement Act of 1979 (hereinafter referred to as "the Act"), an airport operator may submit to the FAA noise exposure maps that meet applicable regulations and which depict non compatible land uses as of the date of submission of such maps, a description of projected aircraft operations, and the ways in which such operations will affect such maps. The Act requires such maps to be developed in consultation with interested and affected parties in the local community, government agencies, and persons using the airport.

An airport operator who has submitted noise exposure maps that are found by FAA to be in compliance with the requirements of Federal Aviation Regulations (FAR) part 150, promulgated pursuant to Title I of the Act, may submit a noise compatibility program for FAA approval that sets forth the measures the operator has taken or proposes for the reduction of existing non compatible uses and for the prevention of the introduction of additional non compatible uses.

The FAA has completed its review of the noise exposure maps and related descriptions submitted by the County of Santa Clara. The specific maps under consideration are Figure 4-1 and Figure 6-1 in the submission. The FAA has determined that these maps for Palo Alto Airport are in compliance with applicable requirements. This determination on an airport operator's noise exposure maps is limited to a finding that the maps were developed in accordance with the procedures contained in Appendix A of FAR Part 150. Such determination does not constitute approval of the applicant's data, information or plans, or a commitment to approve a noise compatibility program or to fund the implementation of that program.

If questions arise concerning the precise relationship of specific properties to noise exposure contours depicted on a noise exposure map submitted under section 103 of the Act, it should be noted that the FAA is not involved in any way in determining the relative locations of specific properties with regard to the depicted noise contours, or in interpreting the noise exposure maps to resolve questions concerning, for example, which properties should be covered by the provisions of section 107 of the Act. These functions are inseparable from the ultimate land use control and planning responsibilities of local government. These local responsibilities are not changed in any way under Part 150 or through FAA's review of noise exposure maps. Therefore, the responsibility for the detailed overlaying of noise exposure contours onto the map depicting properties on the surface rests exclusively with the airport operator that submitted those maps, or with those public agencies and planning agencies with which consultation is required under section 103 of the Act. The FAA has relied on the certification by the airport operator, under section 150.21 of FAR part 150, that the statutorily required consultation has been accomplished.

Copies of the noise exposure maps and of the FAA's evaluation of the maps are available for examination at the following locations:

Federal Aviation Administration, 800 Independence Avenue, SW, Room 617, Washington, DC 20591.

Federal Aviation Administration, San Francisco Airports District Office, 831 Mitten Road, Burlingame, California 94010-1303.

Mr. Donald C. Flynn, Director of Aviation, County of Santa Clara, P.O. Box 611900, San Jose, California 95161-1900.

Questions may be directed to the individual named above under the heading **FOR FURTHER INFORMATION CONTACT.**

Issued in Hawthorne, California on March 10, 1993.

Ellsworth L. Chan,

Acting Manager, Airports Division, Western Pacific Region.

[FR Doc. 93-6608 Filed 3-22-93; 8:45 am]

BILLING CODE 9910-13-M

Aviation Rulemaking Advisory Committee Meeting on General Aviation and Business Airplane Issues

AGENCY: Federal Aviation Administration (FAA), DOT.

ACTION: Notice of meeting.

SUMMARY: The FAA is issuing this notice to advise the public of a meeting of the Federal Aviation Administration's Aviation Rulemaking Advisory Committee to discuss general aviation and business aircraft issues.

DATES: The meeting will be held on April 8, 1993 at 9 a.m. Arrange for oral presentations by April 1, 1993.

ADDRESSES: The meeting will be held at the National Air Transportation Association, 4226 Duke Street, Alexandria, VA.

FOR FURTHER INFORMATION CONTACT: Ms. Kathy Ball, Aircraft Certification Service (AIR-1), 800 Independence Avenue, SW., Washington, DC 20591, telephone (202) 267-8235.

SUPPLEMENTARY INFORMATION: Pursuant to section 10(a)(2) of the Federal Advisory Committee Act (Pub. L. 92-463; 5 U.S.C. App. II), notice is given of a meeting of the Aviation Rulemaking Advisory Committee to be held on April 8, 1993, at the National Air Transportation Association, 4226 Duke Street, Alexandria, VA. The agenda for the meeting will include:

- Opening Remarks
- Review of Action Items
- Final Report of the Fuel Indicators Working Group
- Report of JAR/FAR 23 Harmonization Working Group
- Discussion of Accelerated Stalls message from the FAA
- Discussion of working group schedules and future activities

Attendance is open to the interested public, but will be limited to the space available. The public must make arrangements by April 1, 1993, to present oral statements at the meeting. The public may present written statements to the committee at any time by providing 25 copies to the Assistant Executive Director for General Aviation and Business Airplane Issues or by bringing the copies to him at the meeting. Arrangements may be made by contacting the person listed under the heading "**FOR FURTHER INFORMATION CONTACT.**" Anyone who wishes to obtain a copy of the Fuel Indicators Working Group report may contact Mrs. Carolina Forrester, FAA Office of Rulemaking, on (202) 267-9690 or FAX (202) 267-5075.

Issued in Washington, DC, on March 18, 1993.

William J. Sullivan,

Assistant Executive Director, for General Aviation and Business Aircraft Issues, Aviation Rulemaking Advisory Committee.

[FR Doc. 93-6609 Filed 3-22-93; 8:45 am]

BILLING CODE 4910-13-M

DEPARTMENT OF THE TREASURY

Customs Service

[T.D. 93-17]

Country of Origin Marking for the Czech Republic and the Slovak Republic

AGENCY: U.S. Customs Service, Department of the Treasury.

ACTION: Notice.

SUMMARY: On December 31, 1992, the Czech and Slovak Federal Republic (CSFR or Czechoslovakia) ceased to exist and was succeeded by two separate and independent states, the Czech Republic and the Slovak Republic. This document notifies the public of the names and the English spellings for these two new countries that are to be used for country of origin marking on merchandise imported into the United States from the territory of the former Czechoslovakia. It also grants a grace period to permit the continued importation of merchandise from these countries marked "Czechoslovakia," or "Czech and Slovak Federal Republic."

EFFECTIVE DATE: March 23, 1993.

FOR FURTHER INFORMATION CONTACT: Keith B. Rudich, Office of Regulations and Rulings, (202-482-7010).

SUPPLEMENTARY INFORMATION:

Background

Section 304 of the Tariff Act of 1930, as amended (19 U.S.C. 1304), provides that, unless excepted, every article of foreign origin imported into the U.S. shall be marked in a conspicuous place as legibly, indelibly, and permanently as the nature of the article (or container) will permit, in such a manner as to indicate to the ultimate purchaser in the U.S. the English name of the country or origin of the article. Customs has authority pursuant to 19 U.S.C. 1304 to determine the character of the words and phrases or abbreviations thereof which shall be acceptable as indicating the country of origin and to require the addition of any other words or symbols which may be appropriate to prevent deception or mistake as to the origin of an article.

As of January 1, 1993, the United States recognized the Czech Republic and the Slovak Republic as independent countries. Accordingly, articles imported from the former Czechoslovakia are subject to marking with the English name of the independent countries from which they originate. The United States Department of State has indicated that the English names and the correct spellings of these new independent countries are:

Long form name	Short form name
Czech Republic	(no current short form).
Slovak Republic	Slovakia.

Marking an article with either the short form name or the long form name is acceptable. If either of the long form names are used, the abbreviation "Rep." may be used for "Republic".

Customs recognizes that manufacturers and importers may need time to adjust to these changes and that an abrupt change in the marking requirements could cause undue hardship. Therefore, goods made in the former Czechoslovakia will be accepted as properly marked if they are marked with any of the names previously approved: E.g. "Czechoslovakia," "Czech and Slovak Federal Republic", or the abbreviation "Czech."; or the new appropriate country designation: "Czech Republic", "Slovak Republic", or "Slovakia". Such names will be acceptable until January 1, 1994. All goods produced in the Czech Republic or the Slovak Republic and imported on or after January 1, 1994, will be required to be marked as a product of the particular country from which they originate as set forth above.

Dated: March 3, 1993

Karen J. Hiatt,

Acting Assistant Commissioner, Commercial Operations.

[FR Doc. 93-6549 Filed 3-22-93; 8:45 am]

BILLING CODE 4820-02-M

DEPARTMENT OF VETERANS AFFAIRS

Advisory Committee on Prosthetics and Special-Disabilities Programs; Availability of Annual Report

Under section 10(d) of Public Law 92-463 (Federal Advisory Committee Act) notice is hereby given that the Annual Report of the Department of Veterans Affairs' Advisory Committee on Prosthetics and Special-Disabilities Programs for Fiscal Year 1992 has been issued. The Report summarizes activities of the Committee on matters relative to special disability programs, prosthetic rehabilitation technology, accomplishments which have been made, and the identification of areas where further study and improvements are required. It is available for public inspection at two locations:

Federal Documents Section, Exchange and Gift Division, LM 632, Library of Congress, Washington, DC 20540, and

Department of Veterans Affairs, Prosthetic and Sensory Aids Service,

Techworld Room 542, 801 I Street, NW., Washington, DC 20001.

Dated: March 12, 1993.

Heyward Bannister,

Committee Management Officer.

[FR Doc. 93-6555 Filed 3-22-93; 8:45 am]

BILLING CODE 8320-01-M

Veterans' Advisory Committee on Environmental Hazards; Meeting

The Department of Veterans Affairs (VA) gives notice under Public Law 92-463 that a meeting of the Veterans' Advisory Committee on Environmental Hazards will be held on Thursday, April 22, 1993, and Friday, April 23, 1993 in room 1206/1208, 801 I Street, NW., Washington, DC 20004. The meetings will convene at 9 a.m. and adjourn at 5 p.m.

The purpose of the meetings is to review information relating to activities during which significant numbers of veterans were exposed to ionizing radiation before January 1, 1970 (this includes activities other than participation in an atmospheric nuclear test or service with the occupation forces of Hiroshima, or Nagasaki, Japan.)

The meeting is open to the public to the capacity of the room. For those wishing to attend, contact Mrs. Leney Holohan, Department of Veterans Affairs Central Office (026B), 810 Vermont Avenue, NW., Washington, DC 20420, phone (202) 523-3911, prior to April 15, 1993.

Members of the public may direct questions or submit prepared statements for review by the Committee in advance of the meeting, in writing only, to Mr. Frederic L. Conway, Deputy Assistant General Counsel, (026B), Department of Veterans Affairs Central Office, 810 Vermont Avenue, NW., Washington, DC 20420. Submitted material must be received at least five days prior to the meeting. Such members of the public may be asked to clarify submitted material prior to consideration by the Committee.

Dated: March 12, 1993.

Heyward Bannister,

Committee Management Officer.

[FR Doc. 93-6556 Filed 3-22-93; 8:45 am]

BILLING CODE 8320-01-M

Advisory Committee on Former Prisoners of War; Meeting

The Department of Veterans Affairs (VA) gives notice under Public Law 92-463 that a meeting of the Advisory Committee on Former Prisoners of War will be held in room 1208 at VA Central Office, 701 I St., NW., Washington, DC 20001, from April 28, 1993, through April 30, 1993. the meeting will convene at 9 a.m. each day and will be open to the public. Seating is limited and will be available on a first-come, first-served basis.

The purpose of the Committee is to advise the Secretary of Veterans Affairs on the administration of benefits under title 38, United States Code, for Veterans who are former prisoners of war, and to make recommendations on the need of such veterans for compensation, health care and rehabilitation.

The Committee will receive briefings and hold discussions on various issues affecting health care and benefits delivery, including, but not limited to, the following: Education and training of VA personnel involved with former prisoners of war; the status of privately and publicly funded research affecting former prisoners of war; past and current legislative issues affecting former prisoners of war; the various disabilities and sequelae of long-term captivity; and procedures involved in processing claims for service connected disabilities submitted by former prisoners of war.

Members of the public may direct questions or submit prepared statements for review by the Committee in advance of the meeting, in writing only, to Mr. J. Gary Hickman, Director, Compensation and Pension Service (21), room 276, Department of Veterans Affairs, 810 Vermont Avenue, NW., Washington, DC 20420. Submitted material must be received at least five business days prior to the meeting. Members of the public may be asked to clarify submitted material prior to consideration by the Committee.

A report of the meeting and a roster of Committee members may be obtained from Mr. Hickman.

Dated: March 15, 1993.

By direction of the Secretary.

Heyward Bannister,

Committee Management Officer.

[FR Doc. 93-6557 Filed 3-22-93; 8:45 am]

BILLING CODE 8320-01-M

Scientific Review and Evaluation Board for Rehabilitation Research and Development; Meeting

In accordance with Public Law 92-463, the Department of Veterans Affairs gives notice of a meeting of the Scientific Review and Evaluation Board for Rehabilitation Research and Development. This meeting will convene at the Vista International Hotel, 1400 "M" Street NW., Washington, DC July 13 through July 16, 1993. The session on July 13, 1993, is scheduled to begin at 6:30 p.m. and end at 9:30 p.m. The sessions on July 14, 15, 16, 1993, are scheduled to begin at 8 a.m. and end at 5 p.m. The purpose of the meeting is to review rehabilitation research and development applications for scientific and technical merit and to make recommendations to the Director, Rehabilitation Research and Development Services, regarding their funding.

The meeting will be open to the public (to the seating capacity of the room) for the July 13 session for the discussion of administrative matters, the general status of the program, and the administrative details of the review process. On July 14-16, 1993, the meeting is closed during which the Board will be reviewing research and development applications.

This review involves oral comments, discussion of site visits, staff and consultant critiques of proposed research protocols, and similar analytical documents that necessitate the consideration of the personal qualifications, performance and competence of individual research investigators. Disclosure of such information would constitute a clearly unwarranted invasion of personal privacy. Disclosure would also reveal research proposals and research underway which could lead to the loss of these projects to third parties and thereby frustrate future agency research efforts.

Thus, the closing is in accordance with 5 U.S.C. 522b(c)(6), and (c)(9)(B) and the determination of the Secretary of the Department of Veterans Affairs under section 10(d) of Public Law 92-463 as amended by section 5(c) of Public Law 94-409.

Due to the limited seating capacity of the room, those who plan to attend the open session should contact Ms. Victoria Mongiardo, Program Analyst, Rehabilitation Research and Development Service, Department of Veterans Affairs, 103 South Gay Street, Baltimore, Maryland 21202 (Phone: 410-962-2563) at least five days before the meeting.

Dated: March 12, 1993.

Heyward Bannister,

Committee Management Officer.

[FR Doc. 93-6558 Filed 3-22-93; 8:45 am]

BILLING CODE 8320-01-M

Sunshine Act Meetings

Federal Register
Vol. 58, No. 54
Tuesday, March 23, 1993

This section of the FEDERAL REGISTER contains notices of meetings published under the "Government in the Sunshine Act" (Pub. L. 94-409) 5 U.S.C. 552b(e)(3).

COMMODITY FUTURES TRADING COMMISSION

"FEDERAL REGISTER" CITATION OF PREVIOUS ANNOUNCEMENT: 58 F.R. 12984.

PREVIOUSLY ANNOUNCED TIME AND DATE OF MEETING: 10:00 a.m., Tuesday, April 6, 1993.

CHANGES IN THE MEETING: The Commodity Futures Trading Commission has added to the April 6 open Commission meeting the following:

—Application of the Chicago Mercantile Exchange for designation as a contract market in Rolling Spot Pound Sterling Futures and Options

CONTACT PERSON FOR MORE INFORMATION: Jean A. Webb, 254–6314.

Jean A. Webb,

Secretary of the Commission.

[FR Doc. 93–6733 Filed 3–19–93; 1:04 pm]

BILLING CODE 6351–01–M

FEDERAL MINE SAFETY AND HEALTH REVIEW COMMISSION

TIME AND DATE: 10:00 a.m., Thursday, March 25, 1993.

PLACE: Room 600, 1730 K Street, N.W., Washington, DC.

STATUS: Open.

MATTERS TO BE CONSIDERED: The Commission will consider and act upon the following:

1. *Zeigler Coal Company*, Docket No. LAKE 91–636 (Issues include whether the judge erred in finding that Zeigler violated 30 CFR 75.507 and that the violation was of a significant and substantial nature.)

Any person attending this meeting who requires special accessibility features and/or auxiliary aids, such as sign language interpreters, must inform the Commission in advance of those needs. Subject to 29 CFR § 2706.150 (a)(3) and § 2706.160(e).

CONTACT PERSON FOR MORE INFORMATION: Jean Ellen (202) 653–5629 / (202) 708–9300 for TDD Relay / 1–800–877–8339 for toll free.

Dated: March 18, 1993.

Jean H. Ellen,

Agenda Clerk.

[FR Doc. 93–6769 Filed 3–19–93; 2:51 pm]

BILLING CODE 6735–01–M

BOARD OF GOVERNORS OF THE FEDERAL RESERVE SYSTEM

TIME AND DATE: 10:30 a.m., Monday, March 29, 1993.

PLACE: Marriner S. Eccles Federal Reserve Board Building, C Street entrance between 20th and 21st Streets, N.W., Washington, D.C. 20551.

STATUS: Closed.

MATTERS TO BE CONSIDERED:

1. Federal Reserve Bank and Branch director appointments.
2. Personnel actions (appointments, promotions, assignments, reassignments, and salary actions) involving individual Federal Reserve System employees.
3. Any items carried forward from a previously announced meeting.

CONTACT PERSON FOR MORE INFORMATION: Mr. Joseph R. Coyne, Assistant to the Board; (202) 452–3204. You may call (202) 452–3207, beginning at approximately 5 p.m. two business days before this meeting, for a recorded announcement of bank and bank holding company applications scheduled for the meeting.

Dated: March 17, 1993.

Barbara R. Lowrey,

Associate Secretary of the Board.

[FR Doc. 93–6734 Filed 3–19–93; 1:05 pm]

BILLING CODE 6210–01–M

UNITED STATES INTERNATIONAL TRADE COMMISSION

[USITC SE–93–09]

TIME AND DATE: March 30, 1993 at 10:00 a.m.

PLACE: Room 101, 500 E Street S.W., Washington, DC 20436.

STATUS: Open to the public.

1. Agenda for future meetings
2. Minutes
3. Ratification List
4. Inv. No. 731–TA–644 (Preliminary) (Welded Stainless Steel Pipe from Malaysia)—briefing and vote.
5. Outstanding action jacket requests
   1. GC–93–015–1, APO breach in an investigation under Title VII of the Tariff Act of 1930.
   2. GC–93–020, Proposed Parts 201 and 207 rules amendments.
6. Amended FY 1994 Budget Request and FY 1995 Authorization Request
7. Any items left over from previous agenda

CONTACT PERSON FOR MORE INFORMATION: Paul R. Bardos, Acting Secretary, (202) 205–2000.

Issued: March 19, 1993.

Paul R. Bardos,

Acting Secretary.

[FR Doc. 93–6782 Filed 3–19–93; 3:28 pm]

BILLING CODE 7020–02–M

NATIONAL TRANSPORTATION SAFETY BOARD

TIME AND DATE: 9:30 a.m., Wednesday, March 31, 1993.

PLACE: The Board Room, 5th Floor, 490 L'Enfant Plaza, S.W., Washington, D.C. 20594.

STATUS: Open.

MATTERS TO BE CONSIDERED:

5868B—Aviation Accident Report: Trans World Airlines, Inc.; Flight 843; L–1011, Aborted Takeoff After Liftoff at John F. Kennedy International Airport, New York, July 30, 1992.

NEWS MEDIA CONTACT: Telephone (202) 382–0660.

FOR MORE INFORMATION CONTACT: Bea Hardesty, (202) 382–6525.

Dated: March 19, 1993.

Bea Hardesty,

Federal Register Liaison Officer.

[FR Doc. 93–6674 Filed 3–19–93; 10:32 am]

BILLING CODE 7533–01–M

NUCLEAR REGULATORY COMMISSION

DATE: Weeks of March 22, 29, April 5, and 12, 1993.

PLACE: Commissioners' Conference Room, 11555 Rockville Pike, Rockville, Maryland.

STATUS: Public and Closed.

MATTERS TO BE CONSIDERED:

Week of March 22

Friday, March 26

10:00 a.m.
Briefing on Progress of NRC Regulatory Review (Public Meeting)
(Contact: Frank Gillespie, 301–504–1275)

11:30 a.m.
Affirmation/Discussion and Vote (Public Meeting) (if needed)

Week of March 29—Tentative

Tuesday, March 30

10:00 a.m.
Briefing on Status of Technical Specification Improvement Program (Public Meeting)
(Contact: Chris Grimes, 301–504–1161)

11:30 a.m.
Affirmation/Discussion and Vote (Public Meeting)
a. Advanced Medical Systems, Inc.—Petition for Review of LBP–92–36 (Tentative)

(Contact: Cecelia Carson, 301–504–1625)
b. Babcock and Wilcox—Appeal of Presiding Officer's Memorandum and Order Denying Hearing Request and Terminating Proceeding (LBP–93–4, Docket No. 70–135–DCOM) (Tentative)
(Contact: Roland Frye, 301–504–3505)

Week of April 5—Tentative

Tuesday, April 6

10:00 a.m.
Briefing by IIT on Unauthorized Forced Entry into the Protected Area at TMI–1 (Public Meeting)
(Contact: Sam Collins, 817–860–8183)
11:30 a.m.
Affirmation/Discussion and Vote (Public Meeting) (if needed)

Week of April 12—Tentative

Thursday, April 15

8:00 a.m.
Briefing on Review of SALP Process and Assessment of NRC Inspection Program (Public Meeting)
(Contact: Gary Zech, 301–504–1017)
3:00 p.m.
Affirmation/Discussion and Vote (Public Meeting) (if needed)

ADDITIONAL INFORMATION: By a vote of 4–0 (Commissioner Curtiss not present) on March 15, the Commission determined pursuant to U.S.C. 552b(e) and § 9.107(a) of the Commission's rules that "Affirmation of Environmental and Resources Conservation Organization's Petition for Reconsideration of CLI–93–03 (Rancho Seco)" (Public Meeting) be held on March 15, and on less than one week's notice to the public.

By a vote of 5–0 on March 18, the Commission determined pursuant to U.S.C. 552b(e) and § 9.107(a) of the Commission's rules that "Affirmation of Georgia Power Company's Request for Stay of LB–93–5 Pending Appeal" and by a vote of 4–0 (Commissioner Remick not present) on March 18 that "Affirmation of Sequoyah Fuels Corporation (Source Material License No. SUB–1010) (Docket No. 40–8027–MLA): 1. Request for Hearing on License Amendment Application; 2. Withdrawal of License Amendment Application" (Public Meeting) be held on March 18, and on less than one week's notice to the public.

Note: Affirmation sessions are initially scheduled and announced to the public on a time-reserved basis. Supplementary notice is provided in accordance with the Sunshine Act as specific items are identified and added to the meeting agenda. If there is no specific subject listed for affirmation, this means that no item has as yet been identified as requiring any Commission vote on this date.

To Verify the Status of Meeting Call (Recording)—(301) 504–1292.

CONTACT PERSON FOR MORE INFORMATION: William Hill (301) 504–1661.

Dated: March 19, 1993.

William M. Hill, Jr.,

SECY Tracking Officer, Office of the Secretary.

[FR Doc. 93–6763 Filed 3–19–93; 2:47 pm]

BILLING CODE 7590–01–M

UNITED STATES POSTAL SERVICE BOARD OF GOVERNORS

Notice of a Meeting

The Board of Governors of the United States Postal Service, pursuant to its Bylaws (39 C.F.R. Section 7.5) and the Government in the Sunshine Act (5 U.S.C. Section 552b), hereby gives notice that it intends to hold a meeting at 8:30 a.m. on Tuesday, April 6, 1993, in Washington, D.C. The meeting is open to the public and will be held at U.S. Postal Service Headquarters, 475 L'Enfant Plaza, S.W., in the Benjamin Franklin Room. The Board expects to discuss the matters stated in the agenda which is set forth below. Requests for information about the meeting should be addressed to the Secretary of the Board, David F. Harris, at (202) 268–4800.

There will also be a session of the Board on Monday, April 5, 1993, but it will consist entirely of briefings and is not open to the public.

Agenda

Tuesday Session

April 6–8:30 a.m. (Open)

1. Minutes of the Previous Meeting, March 1–2, 1993.
2. Remarks of the Postmaster General and CEO. (Marvin Runyon.)
3. Annual Report on the Law Department. (Mary S. Elcano, General Counsel and Vice President.)
4. Briefing on the Integrated Mail Handling System. (Stephen E. Miller, Vice President, Operations Support.)
5. Results and Follow-up of the Employee Opinion Survey. (William J. Henderson, Vice President, Employee Relations.)
6. Tentative Agenda for the May 3–4, 1993, meeting in Nashville, Tennessee.

David F. Harris,

Secretary.

[FR Doc. 93–6701 Filed 3–19–93; 11:30 am]

BILLING CODE 7710–12–M

Corrections

Federal Register
Vol. 58, No. 54
Tuesday, March 23, 1993

This section of the FEDERAL REGISTER contains editorial corrections of previously published Presidential, Rule, Proposed Rule, and Notice documents. These corrections are prepared by the Office of the Federal Register. Agency prepared corrections are issued as signed documents and appear in the appropriate document categories elsewhere in the issue.

DEPARTMENT OF EDUCATION

34 CFR Part 600

RIN 1840-AB38

Institutional Eligibility Under the Higher Education Act of 1965, as Amended; Student Assistance General Provisions

Correction

In rule document 93-5400 beginning on page 13336 in the issue of Wednesday, March 10, 1993, make the following correction:

§ 600.40 [Corrected]

On page 13342, in the third column, in § 600.40(a)(1), in the last line, after "institution," insert "location, or program, as applicable, fails".

BILLING CODE 1505-01-D

DEPARTMENT OF JUSTICE

Civil Rights Division

Public Access Section; The Americans With Disabilities Act; Technical Assistance Grants To Promote Voluntary Compliance With the Act

Correction

In notice document 93-5775 beginning on page 13797 in the issue of Monday, March 15, 1993, make the following corrections:

1. On page 13799, in the third column, in the tenth line, "provided" should read "provide".

2. On page 13800, in the first column, in the fourth full paragraph, in the sixth line, insert "of covered entity, with which to work during the grant period" between "type" and "on".

3. On page 13801, in the first column, the heading "**IV. Evaluation of the Secretary**" should read "**IV. Evaluation of the Strategy**".

4. On the same page, in the same column, in the fourth full paragraph, in the first line, "*Selection*" was misspelled.

5. On the same page, in the third column, in the fourth paragraph, in the fourth, fifth and tenth lines, "[insert date 60 days from date of publication]" should read "May 14, 1993".

BILLING CODE 1505-01-D

federal register

Tuesday
March 23, 1993

Part II

Department of Labor

Occupational Safety and Health Administration

29 CFR Part 1910

Occupational Exposure to 2-Methoxyethanol, 2-Ethoxyethanol and Their Acetates (Glycol Ethers); Proposed Rule

DEPARTMENT OF LABOR

Occupational Safety and Health Administration

29 CFR Part 1910

[Docket No. H-044]

Occupational Exposure to 2-Methoxyethanol, 2-Ethoxyethanol and Their Acetates (Glycol Ethers)

AGENCY: Occupational Safety and Health Administration (OSHA), Labor.

ACTION: Proposed rule and notice of hearing.

SUMMARY: The Occupational Safety and Health Administration (OSHA) proposes to amend its existing regulation for occupational exposure to 2-Methoxyethanol (2-ME), 2-Ethoxyethanol (2-EE) and their acetates (2-MEA, 2-EEA) ("Glycol Ethers"). The Assistant Secretary has determined, based on a review and evaluation of studies conducted on the health effects of these glycol ethers, that the current permissible exposure limits (PELs) do not adequately protect employees from significant risks of adverse health effects, specifically reproductive and developmental health effects.

To eliminate these significant risks of adverse health effects, OSHA is proposing for general, maritime, agriculture and construction industries to reduce the existing 8-hour time weighted average (TWA) PELs for 2-ME and 2-MEA to 0.1 ppm and for 2-EE and 2-EEA to 0.5 ppm. OSHA proposes excursion limits (ELs) for these glycol ethers of five times the proposed PELs. OSHA also proposes to set Action Levels (ALs) for these glycol ethers of one-half the proposed PELs, measured as an 8-hour TWA, to encourage lower exposure for employees while reducing administrative burdens on employers. In addition, OSHA proposes that no employee shall be exposed to these glycol ethers through dermal contact.

OSHA proposes to require certain ancillary provisions for employee protection such as preferred methods to control exposure, employee exposure monitoring, medical surveillance, recordkeeping, regulated areas, emergency procedures, hazard communication, and personal protective equipment.

DATES: Written comments on the proposed standard must be postmarked on or before June 7, 1993. Notices of Intention to Appear at the informal public hearings on the proposed standard must be postmarked by June 7, 1993. Parties who request more than 10 minutes for their presentations at the informal public hearing and parties who submit documentary evidence at the hearing must submit the full text of their testimony and all documentary evidence no later than June 28, 1993. The informal rulemaking hearing is scheduled to begin on July 20, 1993.

ADDRESSES: Written comments should be submitted to the Docket Officer, Docket No. H-044, room N-2625, U.S. Department of Labor, 200 Constitution Avenue, NW., Washington, DC 20210.

Notices of Intention to Appear at the informal rulemaking hearing, testimony, and documentary evidence are to be sent to Tom Hall, OSHA Division of Consumer Affairs, Docket No. H-044, room N-3662, U.S. Department of Labor, 200 Constitution Avenue, NW., Washington, DC 20210.

FOR FURTHER INFORMATION CONTACT: Mr. James F. Foster, OSHA, U.S. Department of Labor, Office of Public Affairs, room N-3647, 200 Constitution Avenue, NW., Washington, DC 20210. Telephone (202) 219-8151.

SUPPLEMENTARY INFORMATION:

I. Introduction

Table of Contents

I. Introduction
II. Pertinent Legal Authority
III. History of the Regulation
IV. Chemical Identification, Production, and Use of Ethylene Glycol Ethers
V. Health Effects
A. Introduction
B. Metabolism/Metabolic-Related Health Effects
C. Acute Toxicity
D. Background Discussion on Reproductive and Developmental Toxicology
E. Effects in Animals
1. Male Reproductive Effects
2. Maternal/Developmental Effects
3. Blood Effects
F. Adverse Effects in Humans
G. Mutagenicity
H. Conclusions
I. Health Effects of Other Glycol Ethers
VI. Risk Assessment
VII. Significance of Risk
VIII. Summary of the Regulatory Impact Analyses and Regulatory Flexibility Analysis
IX. Environmental Impact
X. Summary and Explanation of the Proposed Standard
XI. Clearance of Information Collection Requirements
XII. Public Participation—Notice of Hearings
XIII. Authority and Signature
XIV. Proposed Standard and Appendices

A. Issues

Comment is requested on all relevant issues, including health effects, risk assessment, technological and economic feasibility and provisions that should be included in a final glycol ethers standard.

OSHA is especially interested in answers, supported by evidence and reasons, to the following questions.

1. Do OSHA's proposed TWA permissible exposure limits (PELs) of 0.1 ppm for 2-ME and 2-MEA and 0.5 ppm for 2-EE and 2-EEA adequately protect employees from significant risk of adverse health effects? If not, what TWA permissible exposure limits would be more appropriate or would more adequately protect employees from health risks? Please provide data and evidence to support your response.

2. In addition to the proposed TWA PELs and action levels, OSHA has proposed Excursion Limits (ELs) of 0.5 ppm for 2-ME and 2-MEA and 2.5 ppm for 2-EE and 2-EEA. In the preamble to this proposal OSHA has also explained the various reasons for establishing ELs for the glycol ethers included in this proposal. OSHA requests comment on this provision. Please provide data and evidence to support your response.

3. In addition to the PELs for airborne exposure to glycol ethers, OSHA is also proposing that employers ensure that no employee is exposed to glycol ethers through dermal contact. OSHA requests comment on this provision. In particular:

a. Are there methods to measure dermal exposure that could be routinely used to monitor worker exposure to glycol ethers?

b. For employers whose employees are exposed to glycol ethers, what methods do you use to protect employees from dermal contact with glycol ethers?

c. What do these methods cost?

4. OSHA has limited the scope of this proposal to the four glycol ethers referred to OSHA by EPA. OSHA requests comment about whether the proposed scope of this rulemaking is appropriate. OSHA also requests comment about whether the scope of this proposed standard should be expanded to cover other ethylene glycol ethers and/or other propylene glycol ethers. Should there be separate rulemaking undertaken to cover other glycol ethers not included in this proposal? If so, what data and evidence are available to indicate that exposure to these other glycol ethers present a risk to employees?

5. In making its risk assessment, OSHA relied upon the NOEL-Uncertainty Factor approach to describe and calculate the risks associated with occupational exposure to glycol ethers. OSHA requests comment on whether this approach is appropriate for making a risk assessment regarding reproductive/developmental health effects.

a. OSHA requests comment on whether there are more appropriate models for describing or calculating the risks of adverse reproductive/developmental effects among exposed workers. Are there scientifically valid quantitative models that would be more appropriate for assessing risk of reproductive/developmental health effects?

b. OSHA has used an Uncertainty Factor of 100 to determine a level below which humans are unlikely to experience significant risk of adverse reproductive/developmental effects similar to those observed in animals. Is an Uncertainty Factor of 100 appropriate in this circumstance? Would an alternative Uncertainty Factor be more appropriate? Please provide data and evidence to support your response. (Please see section VI of this section for more detailed questions on risk assessment.)

6. Paragraph (g) of the proposed standard would require that supplied air respirators be used in those limited situations where the TWA and/or EL permissible exposure limits are not capable of being achieved solely by means of engineering and work practice controls. The requirement that respiratory protection be limited to supplied air respiratory protection is based on the fact that glycol ethers have poor warning properties at the proposed PELs. OSHA requests comment on this provision. OSHA also requests comment on the following:

a. Would the proposed requirement of supplied air respirators provide adequate protection or are there other kinds of respiratory protection that would be more appropriate and provide more protection?

b. Are there situations in which organic vapor cartridges or canisters could be used to adequately reduce exposures to or below the PELs? Do these other methods have adequate warning of potential breakthrough? Please provide evidence to support your response.

c. Are there any end-of-service-life indicators for the glycol ethers covered by this rulemaking?

d. For those employers whose employees are exposed to glycol ethers, what respiratory protection is provided to employees who are exposed above the PELs? How and why was the particular type of respiratory protection selected?

e. What is the cost of the respiratory protection program?

7. The proposed standard would require that employers provide appropriate personal protective equipment (e.g. coveralls, gloves, eye shields) to prevent exposure through dermal or eye contact in those limited situations where elimination of such contact is not capable of being achieved solely by means of engineering and work practice controls. OSHA requests comment on this provision. OSHA also requests information on the following:

a. OSHA is aware that some exposures to glycol ethers may be intermittent or of short duration. In these situations the breakthrough time of protective clothing or gloves may not be exceeded during a single use. OSHA requests comment on whether the clothing or gloves should be allowed to be reused? If so, in what situations would reuse be appropriate or to what situations should reuse be limited?

b. For employers whose employees are exposed to glycol ethers, what kind of personal protective equipment is provided and in what situations? Please explain, based on the specific situation, how and why use of such equipment was determined. Do employees reuse protective clothing and gloves?

c. For employers whose employees are exposed to glycol ethers, what is the cost of the personal protective equipment that is provided?

8. A number of provisions have been proposed to prevent exposure of employees through off-gassing from and/or contact with glycol ethers from contaminated personal protective equipment. OSHA requests information on problems associated with off-gassing and/or contact in the storage, handling, and disposal of contaminated equipment (particularly at the action levels that have been proposed). Should specific change rooms and showers be required?

9. Specific clean-up procedures have not been required in the proposal. OSHA requests information on whether specific procedures and practices should be required and, if so, what procedures are necessary. Is peroxide formation a problem with these compounds?

10. Paragraph (d)(2) of the proposed standard provides that initial exposure monitoring would be required for all employees who are or may be exposed to glycol ethers. OSHA requests comment on this provision.

a. For employers whose employees are exposed to glycol ethers, please describe your monitoring program and the basis for performing initial monitoring.

b. What are the costs of your monitoring program?

11. Monitoring would be permitted to be discontinued if initial monitoring results show exposure levels to be below the action level and at or below the excursion limits. Should the Agency require a second sample, taken at least seven days later, to confirm the initial monitoring results before permitting discontinuance of monitoring for that employee, as has been required for discontinuance of periodic monitoring?

12. In the medical surveillance provisions of the proposed standard OSHA has not proposed a requirement for any specific tests for the detection of the early onset of adverse reproductive or developmental effects. OSHA requests information about whether there are any medical tests which can be routinely used to detect such effects? If so, what are these tests and with what frequency should they be required? Please provide data and evidence to support your response.

13. The medical surveillance provisions of the proposed standard would require that counseling or tests, which are requested by the employee and deemed appropriate by the examining physician, be made available to employees exposed to glycol ethers who are having difficulty conceiving a child or who have concerns about their ability to conceive a healthy child. Are these requirements adequate and appropriate? If not, what other provisions should be added? For those employers whose employees are exposed to glycol ethers, OSHA also requests information on the following:

a. Is medical surveillance being provided to exposed employees?

b. What exposure levels or other factors trigger medical surveillance?

c. What tests and counseling are included in the medical surveillance program?

d. What provisions are included in the medical surveillance program to address reproductive/developmental health effects resulting from exposure to glycol ethers?

e. What benefits have been achieved from the medical surveillance program?

f. What are the costs of the medical surveillance program?

14. Under the recordkeeping provisions, OSHA proposes that medical records be maintained for at least the duration of employment plus 30 years. Is this recordkeeping provision adequate? If not, what other provisions would provide more protection and be more appropriate? For those employers whose employees are exposed to glycol ethers, what is the current policy regarding maintenance of medical records?

15. Data and evidence presented to OSHA in response to the ANPR indicate that a number of industry sectors are substituting away from manufacture and use of the glycol ethers covered under

this proposal. The major substitutes are 2-Butoxyethanol, propylene glycol monomethyl ether, propylene glycol monomethyl ether acetate and ethylene glycol monopropyl ether. OSHA requests comment on the following:

a. Where and how are these substitutes being used and to what degree have substitutes replaced the glycol ethers covered by this proposal?

b. What other substitutes are being used in place of the glycol ethers covered by this proposal?

c. What are the current employee exposure levels for the substitutes?

d. Are there known hazards and health risks associated with these substitutes?

e. For employers who have substituted, wholly or partially, away from the glycol ethers covered by this proposal, why was substitution undertaken?

f. What results, positive and negative, have been documented as a result of substitution (e.g., changes in productivity and/or production efficiency; changes in product quality; changes in employee absenteeism, medical expenses, worker compensation payments, insurance premiums; effects on compliance with environmental regulations)?

g. What were the costs of substitution?

16. For employers that currently manufacture or use glycol ethers covered by this proposal, OSHA requests the following information regarding substitution:

a. Are there substitutes for glycol ethers available for your business?

b. If you are planning to substitute, what plans and timeline do you have for replacing glycol ethers with substitute chemicals?

c. What percentage of production has been substituted and what percentage still can be substituted away from glycol ethers? What factors prevent complete substitution away from glycol ethers?

d. What will be the projected costs of substitution?

17. OSHA requests the following information from employers involved in glycol ether operations:

a. Job categories for each operation or process in which employees are potentially exposed to glycol ethers.

b. The number of employees in each of those job categories.

c. A brief description of each of those operations, job categories and production techniques.

d. A brief description of the engineering and work practice controls associated with each of those operations.

e. Raw exposure data, annotated if possible, associated with the operations described above

f. The Standard Industrial Classification (SIC) codes of the establishment(s).

18. In each job category where employees are potentially exposed to glycol ethers, please provide the following information regarding employee exposure levels:

a. The last two years of raw air monitoring results, annotated if possible, expressed as an 8-hour time weighted average for all employees who are exposed to glycol ethers and the dates of all raw air monitoring data.

b. The duration and frequency of exposure for those employees.

c. The job tasks or duties being performed at the time of monitoring.

d. The engineering and work practice controls in place at the time of monitoring.

e. The method of monitoring used to measure these exposures.

f. To the extent that representative sampling is used, clearly indicate which employees within each job category were monitored, the corresponding results and which employees were represented by the sampling results. Please discuss your representative sampling strategy and why representative sampling was used.

19. Please provide information on any job category and employee whose exposure to glycol ethers is so varied, intermittent, or of such short duration, etc., that the raw air monitoring data provided in response to the previous question do not adequately portray the nature of the exposures. Please explain your response and indicate peak levels, duration and frequency of exposures for employees in those job categories.

20. OSHA requests the following information regarding engineering and work practice controls:

a. For employers whose employees are exposed to glycol ethers, are the proposed PELs currently being achieved in your facilities in most operations most of the time by means of engineering and work practice controls?

b. In what operations are the proposed PELs being achieved most of the time by means of engineering and work practice controls? What engineering and work practice controls have been implemented in those operations?

c. For all operations in your facilities, what engineering and work practice controls have been implemented?

d. What additional engineering and work practice controls could be implemented in each operation where exposure levels are currently above the proposed PELs to further reduce exposure levels?

e. When these additional controls are implemented, to what levels can exposure levels be expected to be reduced?

f. What are the costs and time needed to develop, install and/or implement additional controls?

g. Are there any processes or operations in which it is not reasonably possible to implement engineering and work practice controls within six months to one year to achieve the proposed PELs? If so, would allowing additional time for employers to come into compliance with paragraph (f) • make compliance reasonably possible? How much time would be necessary?

21. In operations where air exposure levels are above the proposed PELs, to what extent can these operations and processes be automated and enclosed or remotely controlled? To what extent can quality control sampling be remotely controlled? Are there any restrictions on the use of automated or remote control techniques?

22. What are the benefits, other than reducing employee exposures to glycol ethers, that can be derived from implementing engineering and work practice controls (e.g., reduced exposure to other contaminants; compliance with environmental regulations; increased productivity and/or production efficiency; product improvement; reduced absenteeism; reduction in medical expenses, insurance premiums and worker compensation payments, etc.)?

23. Are engineering control technologies that have proven effective in industries not covered by this notice applicable or transferrable to the chemicals covered by this proposal? Please explain and provide evidence to support the nature and extent of compatibility or applicability.

24. OSHA requests information on whether there are any limited unique conditions or job tasks in glycol ether manufacture or use where engineering and work practice controls are not available or are not capable of reducing exposure levels to or below the proposed PELs most of the time. Please provide data and evidence to support your response.

25. In the Preliminary Regulatory Impact Analysis OSHA has estimated benefits by extrapolating from the NOEL-Uncertainty Factor approach. OSHA requests comment on its methodology in using the Uncertainty Factor approach to project benefits. OSHA also requests comment on whether there are alternative methods, either quantitative or qualitative, for projecting benefits associated with a reduction in exposure to glycol ethers.

26. In order to perform the economic feasibility analysis for the final rule,

OSHA requests employers and interested parties submit the following information from the last five years on your company and/or industry sector:

a. Profits, sales and the percentage of each which are related to the glycol ethers covered by this proposal.

b. Total annual volume and dollar value of production for your company and/or industry sector. What percentages are related to the glycol ethers covered by this proposal?

c. Annual labor turnover rate of your company and/or industry sector for jobs involving exposure to the glycol ethers covered by this proposal.

27. For performing an economic feasibility analysis, OSHA also requests the following:

a. A financial and economic profile of your company and/or industry sector.

b. A profile of your financial position in the market and your market share in producing glycol ethers or producing products utilizing glycol ethers.

c. The number of facilities in your industry sector.

28. What is the age, production capacity and estimated remaining life of your plant and equipment?

29. Will major renovation or reconstruction of your company be required to bring air monitoring results into compliance with the proposed standard? If so, please provide costs and time necessary for renovation and/or reconstruction.

30. The Agency has prepared a draft Regulatory Flexibility Analysis analyzing the impacts of the proposed standard on the small businesses which OSHA believes may be affected. The following information is requested for small businesses in addition to the information OSHA has gathered.

(a) What kinds of small businesses or organizations and how many of them would be affected by regulating exposures?

(b) Which, if any, federal rules may duplicate, overlap, or conflict with an OSHA regulation concerning glycol ethers?

(c) Will difficulties be encountered by small entities when attempting to comply with requirements of the proposed standard? Can some of the requirements be deleted or simplified for small entities, while still achieving comparable protection for the health of employees of small entities?

(d) What timetable would be appropriate to allow small entities sufficient time to comply?

31. The National Environmental Policy Act (NEPA) of 1969 (42 U.S.C. 4321 et seq.) requires that each Federal agency consider the environmental impact of major actions significantly affecting the quality of the human environment. Any person having information, data or comments pertaining to possible environmental impacts is invited to submit them along with accompanying documentation to OSHA. Such impacts might include:

(a) Any positive or negative environmental effects that could result should a standard be adopted;

(b) Beneficial or adverse relationships between the human environment and productivity;

(c) Any irreversible commitments of natural resources which could be involved should a standard be implemented; and

(d) Estimates of the degree of reduction of glycol ethers in the environment by the proposed standard and alternatives.

In particular, consideration should be given to the potential direct or indirect impacts of any action, or alternative actions, on water and air pollution, energy usage, solid waste disposal, or land use.

B. Federalism

This proposed standard has been reviewed in accordance with Executive Order 12612, 52 FR 41685 (October 30, 1987), regarding Federalism. This Order requires that agencies, to the extent possible, refrain from limiting state policy options, consult with States prior to taking any actions that would restrict State policy options, and take such actions only when there is clear constitutional authority and the presence of a problem of national scope. The Order provides for preemption of State law only if there is a clear Congressional intent for the agency to do so. Any such preemption is to be limited to the extent possible.

Section 18 of the Occupational Safety and Health Act (OSH Act), expresses Congress' clear intent to preempt State laws with respect to which Federal OSHA has promulgated occupational safety or health standards. Under the OSH Act a State can avoid preemption only if it submits, and obtains Federal approval of, a plan for the development of such standards and their enforcement. Occupational safety and health standards developed by such Plan-States must, among other things, be at least as effective as the Federal standards in providing safe and healthful employment and places of employment.

Since these materials are present in workplaces in every state of the Union, the occupational hazard of glycol ethers is a national problem.

The Federally proposed glycol ether standard is drafted so that employees in every State would be protected by the standard. To the extent that there are any State or regional peculiarities, States with occupational safety and health plans approved under section 18 of the OSH Act would be able to develop their own State standards to deal with any special problems.

In short, there is a clear national problem related to occupational safety and health for employees exposed to glycol ethers. Those States which have elected to participate under section 18 of the OSH Act would not be preempted by this proposed regulation. State comments are invited on this proposal and will be fully considered prior to promulgation of a final rule.

C. State Plans Revisions

The 23 states and 2 territories which operate their own Federally-approved occupational safety and health plans must adopt a comparable standard within six months of the publication date of a final standard. These States include: Alaska, Arizona, California, Connecticut (for State and local government employees only), Hawaii, Indiana, Iowa, Kentucky, Maryland, Michigan, Minnesota, Nevada, New Mexico, New York (for State and local government employees only), North Carolina, Oregon, Puerto Rico, South Carolina, Tennessee, Utah, Vermont, Virginia, Virgin Islands, Washington, Wyoming. Until such time as a state or territorial standard is promulgated, Federal OSHA will provide interim enforcement assistance, as appropriate.

II. Pertinent Legal Authority

This proposed standard and the issuance of a final standard are authorized primarily by sections 4(b)(2), 6(b), 8(c) and 8(g)(2) of the Occupational Safety and Health Act of 1970 (the Act) (29 U.S.C. 653(b)(2), 655(b), 657(c), 657(g)(2)).

Section 6(b)(5) governs the issuance of occupational safety and health standards dealing with toxic materials or harmful physical agents. Section 6(b)(5) provides that the Secretary, in promulgating standards dealing with toxic materials, or harmful physical agents under this subsection, shall set the standard which most adequately assures, to the extent feasible, on the basis of the best available evidence, that no employee will suffer material impairment of health or functional capacity even if such employee has regular exposure to the hazard dealt with by such standard for the period of his working life. Development of standards under this subsection shall be based upon research, demonstrations, experiments, and such other

information as may be appropriate. In addition to the attainment of the highest degree of health and safety protection for the employee, other considerations shall be the latest available scientific data in the field, the feasibility of standards, and experience gained under this and other health and safety laws.

Section 3(8) of the Act defines an *occupational safety and health standard* as a standard which requires conditions, or the adoption or use of one or more practices, means, methods, operations, or processes, reasonably necessary or appropriate to provide safe or healthful employment and places of employment.

Under section 6(b)(7) of the Act, standards must, where appropriate, include provisions for labels or other appropriate forms of warning to apprise employees of hazards, suitable protective equipment, exposure control procedures, monitoring and measuring of employee exposure, employee access to the results of monitoring, medical examinations or other tests, at no cost to employees, to determine whether the health of employees is adversely affected by such exposure, and training and education. In addition, section 8(c)(3) of the Act empowers the Secretary to promulgate standards prescribing recordkeeping requirements where necessary or appropriate for enforcement of the Act or for developing information regarding the causes and prevention of occupational accidents and illnesses.

The Supreme Court has held that under the Act the Secretary, before issuing a new standard, must determine that it is reasonably necessary and appropriate to remedy a significant risk of material health impairment. *Industrial Union Department* v. *American Petroleum Institute*, 448 U.S. 607, 642 (1980). The Court stated that "before he can promulgate any permanent health or safety standard, the Secretary is required to make a threshold finding that a place of employment is unsafe in the sense that significant risks are present and can be eliminated or lessened by a change in practices." *Id.*, at 642, 644, n. 49.

The Court indicated, however, that the significant risk determination is "not a mathematical straightjacket." *Id.*, at 655. "OSHA is not required to support its finding that a significant risk exists with anything approaching scientific certainty." *Id.*, at 656. Rather, the Court stated that "a reviewing court [is] to give OSHA some leeway where its findings must be made of the frontiers of scientific knowledge." *Id.*, at 656. The Court also stated that while the "Agency must support its findings that a certain level of risk exists with substantial evidence, we recognize that its determination that a particular level of risk is 'significant' will be based largely on policy considerations." *Id.*, at 655–56, n. 62.

After OSHA has determined that a significant risk exists and that such a risk can be reduced or eliminated, it must set a standard which most adequately assures, to the extent feasible on the basis of the best available evidence, that no employee will suffer material impairment of health (section 6(b)(5)). The Supreme Court has interpreted this section to mean that OSHA must enact the most protective standard possible to eliminate a significant risk of material health impairment, subject to the constraints of technological and economic feasibility. *American Textile Manufacturers Institute* v. *Donovan*, 452 U.S. 490, 509 (1981). The Court held that "cost-benefit analysis by OSHA is not required by the statute because feasibility analysis is." *Id.*

Section 4(b)(2) of the Act provides that standards issued under OSHA apply to construction and maritime employment where the Secretary determines these standards to be more effective than existing standards which would otherwise apply to that employment. (OSHA has proposed the addition of new paragraph (n) to 29 CFR 1910.19, which would apply the proposed glycol ethers standard to construction and maritime employment, in addition to its coverage of general industry).

Authority to issue this proposed standard is further supported by the general rulemaking authority found in section 8(g) of the Act. Section 8(g)(2) empowers the Secretary to prescribe such rules and regulations as he may deem necessary to carry out [his] responsibilities under the Act. The Secretary's responsibilities under the Act are defined largely by its enumerated purposes (section 2(b)), which include:

Encouraging employers and employees in their efforts to reduce the number of occupational safety and health hazards at their places of employment, and to stimulate employers and employees to institute new and to perfect existing programs for providing safe and healthful working conditions;

Building upon advances already made through employer and employee initiative for providing safe and healthful working conditions;

Developing innovative methods, techniques, and approaches for dealing with occupational safety and health problems;

Exploring ways to discover latent diseases, establishing causal connections between diseases and work in environmental conditions;

Providing for the developing and promulgation of occupational safety and health standards;

Providing for appropriate reporting procedures with respect to occupational safety and health which procedures will help achieve the objectives of this Act and accurately describe the nature of the occupational safety and health problems;

Encouraging joint labor-management efforts to reduce injuries and disease arising out of employment.

Because the proposed glycol ethers standard is reasonably related to these statutory goals and because the Agency's preliminary judgment is that the evidence satisfies the statutory requirements and that the proposed standard is feasible and substantially reduces significant risk of adverse health effects, especially reproductive and developmental health effects, the Secretary preliminarily finds that the proposed standard is necessary and appropriate to carry out the Agency's responsibilities under the Act.

III. History of the Regulation

OSHA's current Permissible Exposure Limits (PELs) for 2–ME, 2–MEA, 2–EE, and 2–EEA are 25 ppm, 25 ppm, 200 ppm, and 100 ppm, respectively. All are time weighted averages (TWAs) for an 8-hour workshift (29 CFR 1910.1000, Table Z–1–A). In the Z–1–A Table, 2–ME, 2–MEA, 2–EE, and 2–EEA are listed under the names Methyl Cellosolve, Methyl Cellosolve Acetate, 2-Ethoxyethanol, and 2-Ethoxyethanol Acetate, respectively. The OSHA standards bear a skin notation, indicating the potential contribution to the overall exposure by the cutaneous route, including mucous membranes and eye, either by airborne or more particularly, by direct contact with the substance.

The current standards were adopted in 1971 pursuant to section 6(a) of the Occupational Safety and Health Act of 1970 (29 U.S.C. 655). The source of these standards was the American Conference of Governmental Industrial Hygienists (ACGIH) and they are based primarily on blood, kidney, liver and central nervous system toxicity.

In the late 1970's, many studies began to be published regarding adverse effects, including testicular atrophy, infertility, fetotoxicity, and fetal malformations in laboratory animals exposed to glycol ethers. In response to these findings, the ACGIH, in its notice of Intended Changes (for 1982),

proposed TWAs of 5 ppm for 2–ME, 2–EE and their acetates which were subsequently adopted in 1984. Likewise, on May 2, 1983, NIOSH published a Current Intelligence Bulletin recommending that 2–ME and 2–EE be regarded in the workplace as having the potential to cause adverse reproductive effects in male and female workers and embryotoxic effects, including teratogenesis, in the offspring of the exposed pregnant females and urged employers to reduce exposures to the lowest extent possible (Ex. 5–001).

On January 24, 1984, EPA published an Advance Notice of Proposed Rulemaking (ANPR) in which they announced their intention to regulate 2–ME, 2–EE and their acetates (49 FR 2921). EPA was concerned about the toxicity of these chemicals due to evidence of human exposure to concentrations above levels currently recommended by the ACGIH, and the potential for significant numbers of individuals to become exposed. After consideration of the record developed in connection with its ANPR, EPA determined that the risks associated with exposure to 2–ME, 2–EE and their acetates could be sufficiently reduced by action taken under the OSH Act. Following these findings, EPA, in accordance with section 9(a) of TSCA, on May 20, 1986, referred 2–ME, 2–EE and their acetates to OSHA to give this Agency an opportunity to regulate the chemicals under the OSH Act (51 FR 18488). EPA requested OSHA to determine whether the risks described in the EPA report could be prevented or reduced to a sufficient extent by action taken under the OSH Act. If such a determination was made then OSHA was requested to issue a notice declaring whether the manufacture and use described in the EPA report presented the risk therein described. EPA requested OSHA to respond within 180 days.

On December 11, 1986, OSHA published a notice (51 FR 42257) responding to the EPA referral report by making a preliminary determination that a revised OSHA standard limiting occupational exposure to 2–ME, 2–EE and their acetates could prevent or reduce the risks due to exposure to a sufficient extent and that such a risk had been accurately described by EPA in the report.

On April 2, 1987, OSHA decided it would proceed with permanent rulemaking to reduce exposure to 2–ME, 2–EE and their acetates and published an ANPR (52 FR 10586). OSHA based its decision on the determination that the existing standards did not adequately address the adverse health effects associated with 2–ME, 2–EE and their acetates. OSHA solicited information and comments regarding the hazards of exposures to the chemicals, control methods for reducing these hazards and the costs of controlling exposures.

In September of 1991, NIOSH published a Criteria for a Recommended Standard for Ethylene Glycol Monomethyl Ether, Ethylene Glycol Monoethyl Ether, and Their Acetates (i.e., 2–ME, 2–EE and their acetates) (Ex. 5–154). In this document NIOSH recommended worker exposures to 2–ME and its acetate, 2–MEA, be limited to 0.1 ppm as time weighted average for up to 10 hours/day during a 40 hour workweek (10-hr TWA) and that worker exposure to 2–EE and its acetate, 2–EEA, be limited to 0.5 ppm as a 10-hr TWA. NIOSH also recommended that dermal contact to 2–ME, 2–EE and their acetates be prohibited. In addition to these recommended exposure limits, NIOSH also recommended various industrial hygiene provisions including exposure monitoring, medical monitoring, protective clothing and equipment, engineering controls and work practices and hazard communication. The provisions of this recommended standard were based primarily on adverse reproductive, developmental and blood effects.

IV. Chemical Identification, Production and Use of Ethylene Glycol Ethers

The chemicals, 2-Methoxyethanol (2–ME), 2-Methoxyethanol acetate (2–MEA), 2-Ethoxyethanol (2–EE), and 2-Ethoxyethanol acetate (2–EEA) are members of a class of chemicals known as ethylene glycol ethers which are, in turn, members of a broader class of chemicals known as glycol ethers. In this document the terms ethylene glycol ethers or glycol ethers will refer only to 2–ME, 2–MEA, 2–EE and 2–EEA. The respective Chemical Abstract Service (CAS) Registry numbers for the subject ethylene glycol ethers are 109–86–4, 110–49–6, 110–80–5, 111–15–9. All four compounds are colorless, flammable liquids which are compatible with a broad range of resins and are miscible in both organic solvents and water. They have relatively low vapor pressures, high boiling points, low evaporation rates and high flash points. At room temperature and atmospheric pressure, these compounds are highly reactive in the presence of strong oxidizers; 2–MEA and 2–EEA are also highly reactive in the presence of nitrates and strong acids. Decomposition products during combustion include toxic gases and vapors such as carbon monoxide.

2–ME, chemical formula $CH_3OCH_2CH_2OH$, has a molecular weight of 76.1, a boiling point at 760mm Hg of 124 C, a vapor pressure at 20 C of 6mm Hg, a flash point of 42 C and possesses a mild non-residual odor. 2–MEA, chemical formula $CH_3COOCH_2OCH_3$, has a molecular weight of 118, a boiling point of 145 C, a vapor pressure of 2mm Hg, a flash point of 44 C and possesses a mild ether-like odor. 2–EE, chemical formula $C_2H_5OCH_2CH_2OH$, has a molecular weight of 90.1., a boiling point of 135 C, a vapor pressure of 4mm Hg, a flash point of 49 C and possesses a sweetish odor with odor. 2–EEA has chemical formula $C_2H_5OCH_2OCOCH_3$, a molecular weight of 132, a boiling point of 156 C, a vapor pressure of 2mm Hg, a flash point of 47 C and possesses a mild non-residual odor. The odor thresholds of these compounds are discussed in the Respiratory Protection portion of this document.

Ethylene glycol ethers are produced by the ethoxylation of ethylene oxide with preheated anhydrous alcohol. Methyl alcohol produces ethylene glycol monomethyl ether (2–ME) and ethyl alcohol produces ethylene glycol monoethyl ether (2–EE). The corresponding acetates, 2–MEA and 2–EEA are produced by the esterification of 2–ME and 2–EE with acetic acid.

Due to their physical characteristics, ethylene glycol ethers are useful in a wide variety of applications, particularly as solvents. In general, these ethers are used extensively in the formulation of paints and coatings, commercial printing inks, industrial solvents, and cleaners. They are also used as chemical intermediates in the production of plastisizers, as de-icing additives in jet fuels, and in electronics manufacturing.

After manufacture of glycol ethers for export (45% of total sales), the utilization of these compounds as chemical intermediates accounts for the largest percentage (24%) of their sales (PEI report, Ex. 5–164). For example, the manufacture of 2–EEA is the largest single use of 2–EE while 2–ME is used in the production of 2–MEA. Both 2–ME and 2–EE are also used to produce a variety of plastisizers for use in such products as 35 mm film, insulation for high voltage wires, and high flash coatings.

Another principal area of use (15% of total sales) of the four glycol ethers is in the formulation of paints and coatings (e.g., primers, varnishes, stains, etc.). These paints and coatings are utilized in original equipment manufacture (OEM) of items such as automobiles and trucks, machinery and equipment, metal cans,

metal furniture and appliances, and in coil coatings. They are also found in auto refinishing and maintenance painting formulations. In addition, all four glycol ethers are used in a variety of special coating applications ranging from fingernail polish to wood stains.

The electronics industry employs glycol ethers in the manufacture of semiconductors and circuit boards. Glycol ethers are a component of the photoresist used in the photolithography of semiconductor circuit designs in addition to being utilized in coating/lamination resins of circuit boards. Products used in the marking, bonding, and labeling of circuit boards may also contain ethylene glycol ethers.

Substantial quantities of 2–ME are used as de-icing additive in jet fuel. Since commercial jets have in-line de-icers, this market is principally military. However, some general aviation jet fuel also requires de-icing additive.

Comparable to glycol ether's use in paint and coatings is their role as solvents in the formulation of commercial printing inks, particularly those used in silk screen, flexographic, and gravure printing. Ethylene glycol ethers are also found in formulations used in textile dyeing and printing. In addition to being a component of the ink itself, glycol ethers are used in solvents and machinery cleaners for the commercial printing industry.

While the above uses account for the vast bulk of glycol ether consumption, they have also been reported to be utilized in a number of diverse cleaning solvents, as solvent in adhesive, in leather dying/tanning, and in the manufacturing of pharmaceuticals.

V. Health Effects

A. Introduction

The experimental studies in animals clearly demonstrate that 2–ME and 2–EE induce adverse reproductive, developmental and hematological effects. Several species (e.g., rats, rabbits and mice) exposed through several routes of exposure (e.g., oral, dermal, and inhalation) have consistently shown similar effects after exposure to these ethylene glycol ethers. Exposed males have exhibited testicular degeneration, disrupted spermatogenesis and reduced fertility. Females exposed during gestation have shown signs of maternal toxicity as well as increased incidence of resorptions. Offspring from these exposed females have exhibited a variety of teratogenic effects including cardiac, skeletal and visceral malformations. In addition, newborn pups have exhibited behavioral and neurochemical alterations. Adverse blood effects have also been observed after exposure. These effects include decreases in red blood cells, white blood cells, hemoglobin concentrations and hematocrit.

Although less extensive, the animal data have also shown that the acetates, 2–MEA and 2–EEA, induce adverse reproductive and developmental and hematological effects similar to those observed among their parent glycol ethers. These studies confirm the findings of metabolic studies which indicate that 2–ME, 2–EE and their acetates follow similar metabolic pathways, producing similar metabolites, which are the active agents most likely responsible for the observed effects.

Consistent with these experimental results is human evidence of reproductive and hematological effects. Workers exposed to 2–ME and 2–EE have exhibited decreased sperm counts, testicular atrophy and decreased red and white blood cell counts. Little data have been reported on the reproductive, maternal or developmental effects for women exposed to glycol ethers. However, the lack of data in this area may be due, in most part, to the difficulty in conducting analyses for these types of adverse effects. Although workers in some instances were exposed to multiple substances, making it difficult to ascribe exposure to a particular glycol ether to an observed effect, the human evidence is, nevertheless, consistent with and supportive of the animal evidence which indicates that these substances will induce adverse reproductive and developmental effects.

B. Metabolism/Metabolic-Related Health Effects

The ethylene glycol ethers, 2–ME and 2–EE, are metabolized to their corresponding acetic acids, methoxyacetic acid (MAA) and ethoxyacetic acid (EAA), by an alcohol dehydrogenase (ADH) mediated pathway. Animal studies conducted with MAA have shown that it is the metabolite, rather than the parent glycol ether, which is responsible for inducing adverse reproductive and developmental effects. 2–MEA and 2–EEA are also metabolized by the ADH pathway to MAA and EAA. Because these two acetates are metabolized to the same primary metabolites as their corresponding parent glycol ethers, it is assumed that they will induce similar adverse reproductive and developmental effects. Studies in male and female volunteers confirm that the ADH pathway is also the primary route of metabolism in humans. However these studies also indicate that the retention and biological half life of the active metabolite is longer in humans than in animals.

Miller et al. (Ex. 4–131) identified MAA as the primary metabolite of 2–ME by radiogas-chromatography/mass spectrometry analysis. The investigators recovered 50–60% of the administered ^{14}C from urine of rats within 48 hours after a single oral dose of [^{14}C] 2–ME. Expired $^{14}CO_2$ was the only other significant route of elimination (12%). Thus, urine was established as the major vehicle of elimination of ^{14}C after a single oral dose of [^{14}C] 2–ME. Urine collected was then analyzed by radiogas-chromatography/mass spectrometry. Analysis revealed the primary component as methoxyacetic acid. Based on these findings Miller et al. concluded that 2–ME is first oxidized to methoxyacetaldehyde by ADH and then further oxidized to MAA by aldehyde dehydrogenase.

Evidence also indicates that MAA is the ultimate toxin responsible for the observed adverse reproductive and developmental effects. Brown et al. (Ex. 4–102) gave single injections of 244 mg MAA/kg to pregnant rats on days 8, 10, 12 or 14 of gestation. Exposure to MAA induced significant increases in the incidence of embryo-fetal mortality, decreases in fetal weight, and increases in structural malformations (e.g., skeletal malformations, hydrocephalus and urogenital abnormalities). Similarly Miller et al. (Ex. 4–133) found that the administration of MAA daily for two weeks by gavage to rats resulted in severe degeneration of testicular germinal epithelium and hematological abnormalities. For example significant decreases in testicular weight and in red blood cell counts were observed at 300 and 100 mg MAA/kg. These toxicological effects were remarkably similar to those observed following administration of 2–ME. The authors concluded that the adverse health effects of 2–ME are probably the result of *in vivo* activation of 2–ME to MAA, and that MAA is the proximate toxin following administration of 2–ME. The findings of Ritter et al. (Ex. 4–143), Yonemoto (Ex. 4–192) and Foster et al. (Ex. 5–052) are consistent with this view.

In addition to their studies on the teratogenicity of MAA, Ritter al. (Ex. 4–143) also investigated the effects of the co-administration of 2–ME and 4-Methylpyrazole. 4-Methylpyrazole (4–MP) is an inhibitor of alcohol dehydrogenase (ADH) and thus may block metabolism occurring by an ADH pathway. In this study it was observed

that embryotoxicity (i.e., the number of dead, resorbed and malformed fetuses) following co-administration of the two substances was 16.8%, as compared to 100% for the same dose and the same route of 2–ME alone. The observation that the co-administration of 4–MP provided significant protection against the embryotoxic of 2–ME is consistent with the hypothesis that metabolism of 2–ME occurs via the alcohol dehydrogenase (ADH) pathway and that it is the primary metabolite that is most likely the active agent in the induction of adverse effects.

Similar findings have been reported by Sleet et al (Ex. 5–118). In this study pregnant mice were exposed to either 2–ME (1.3 to 1.6 mmole/kg) or MAA (1.1 to 1.7 mmole/kg) by gavage on day 11 of gestation. 2–ME and MAA were found to be equally potent in producing significant increases in the incidence of paw malformations (e.g., webbed, missing or additional digits). The co-administration of 4-Methyl Pyrazole was found to reduce the teratogenic potency of 2–ME. For example, the incidence of malformations induced by 4.6 mmole/kg 2–ME was reduced from 94% to 59% when 4–MP was administered at a dose of 0.12 mmole/kg. The incidence of malformations was reduced to 0% when 4–MP was administered at a dose of 1.2 mmole/kg. These data further indicate the role of metabolism in inducing teratogenic effects and strongly points to MAA as the active agent.

Similar to the metabolic studies on 2–ME, the evidence also indicates that the primary metabolite of 2–EE is also an alkoxyacetic acid; in this case ethoxyacetic acid (EAA). Cheever et al. (Ex. 5–089) gave single oral doses of 230 mg 2–EE/kg body weight. The major metabolites detected in the urine were EAA and N-ethoxyacetyl glycine. EAA was also detected in the rat testes. The authors concluded that the most probable route of metabolism was the oxidation of 2–EE through ADH to EAA with some subsequent conjugation of EAA to glycine to form N-ethoxyacetyl glycine.

Similar to the findings in animal studies, experimental studies using male and female volunteers, have shown alkoxyacetic acids to be the primary metabolites in humans. In a series of experiments Groeseneken et al. (Exs. 5–112, 5–113, and 5–114) exposed 10 male volunteers by inhalation to 2.7, 5.4 or 10.8 ppm 2–EE for 4 hours, both at rest and during physical exercise. Consistent with findings in animal studies, EAA was found to be the major urinary metabolite. However the biological half life in humans was found to be approximately 21–24 hours compared to the biological half life of 8–12 hours reported in animals. It was also observed that EAA excretion increased with increasing dose and/or physical activity. Due to the long half life, the authors stated that EAA will not be cleared from the urine by the next morning following exposure and accumulation of the metabolite may be expected through repetitive exposures. Thus EAA may build up in the body over the course of the workweek.

In a similar study Groeseneken et al. (Ex. 5–115) exposed 10 male volunteers by inhalation to 2–EEA. Five volunteers were exposed at rest to 2.6, 5.2 and 9.3 ppm 2–EEA and 5 were exposed to 5.2 ppm 2–EEA during physical exercise. Again, EAA was detected as the major metabolite with a biological half life of approximately 23 hours. It was observed that the metabolism of 2–EEA followed the same time course as 2–EE (Ex. 5–112) and that for equivalent doses of 2–EE and 2–EEA, equivalent amounts of EAA were excreted. The authors concluded that 2–EEA is first converted to 2–EE by esterases and then to EAA by an ADH mediated pathway. Similarly it was found that EAA is not cleared from urine by the next morning and thus may build up over the work week following repetitive exposures.

In field study of workers, Veulemans et al. (Ex. 5–114) studied the urinary excretion of EAA for a group of 5 female silk screen operators who were exposed, by inhalation, to mixtures of 2–EE and 2–EEA at approximately 5.6 and 5 ppm, respectively. In this study the women were monitored for 5 days during a normal production period. They were also monitored during another 7 day period after a 12 day production stop. Similar to the experimental studies among human volunteers, EAA was detected in the urine as the major metabolite during the 5 days of production and was also found to accumulate during the workweek. The authors also reported that even after 12 days of non-exposure, traces of EAA were still detectable in the urine. The authors stated that these findings confirmed the earlier short term studies by Groeseneken (Exs. 5–112 and 5–115) and suggested that the biological half life of EAA may even be greater than 24 hours. Moreover they added that from a toxicological point of view, "it would certainly warrant extra caution in the extrapolation of experimental data from laboratory animals to man, since comparable accumulation effects apparently are not found in all species."

To further investigate the metabolic differences between rats and humans, Groeseneken et al. (Ex. 5–137) compared the urinary excretion of EEA in man and rat. In this study rats were orally exposed to 2–EE at low doses comparable to the inhalation doses used on male volunteers in previous experimental studies (Ex. 5–112). The authors stated that oral doses were used in rats due to the lack of animal data necessary to calculate respiratory uptake of 2–EE (e.g., 2–EE pulmonary retention and respiratory minute volume). Data for calculating respiratory uptake were available in human studies. It was assumed that metabolism was independent of the route of administration. Groups of five rats were exposed to single oral doses of 0.5 mg/kg, 1 mg/kg, 5 mg/kg, 10 mg/kg, 50 mg/kg or 100 mg/kg 2–EE. Exposure levels of 0.5 mg/kg and 1 mg/kg were noted by the authors to be equivalent to human exposures of 5.4 ppm or 10.8 ppm 2–EE used in the human experimental studies. After a correction for body weight on urinary excretion, results from these studies showed that, for humans, the maximal excretion rate of the primary metabolite, EEA, declined at a slower rate (48 hours after exposure) than in rats (12 hours after exposure) at equivalent doses. In addition the half life for EEA in humans was calculated at 42 hours compared to 7.2 hours for rats: almost 6 times higher for man. The authors suggested that these findings could have important consequences for the toxicity of 2–EE in man as the toxic properties of 2–EE have been associated with the alkoxyacetic acid metabolite, EEA.

Romer et al. (Ex. 5–033) have also shown that the co-administration of ethanol with 2–ME and 2–EE prolonged the retention of 2–ME and 2–EE in the blood. In this study rats were pretreated with ethanol and then exposed by inhalation to 1600 ppm 2–ME or 420 ppm 2–EE or ip-administration to 5 ml/kg body weight 2–ME or 2–EE). In both cases it was observed that degradation of 2–ME and 2–EE was almost completely inhibited when rats were pretreated with ethanol. Only after the elimination of ethanol was complete, did the blood levels of 2–ME and 2–EE begin to decrease. The authors concluded that ethanol, which is also metabolized by the alcohol dehydrogenase (ADH) pathway, must have a higher affinity for ADH enzymes than 2–ME or 2–EE. Because of its higher affinity, ethanol is preferentially metabolized. The authors suggested that blood levels of 2–ME and 2–EE may persist in workers who use 2–ME or 2–EE in combination with alcoholic consumption. This persistence of 2–ME and 2–EE in the blood could result in an enhanced health risk.

C. Acute Toxicity

The acute toxicity of ethylene glycol ethers have been shown in several animal species (e.g., mice, rats, rabbits, guinea pigs and cats) by various routes of administration (e.g., oral, injection, dermal and inhalation). Smyth et al. (Ex. 5–138) examined the single dose toxicity of a variety of compounds, including 2–ME, 2–EE, 2–MEA and 2–EEA. In this study rats and guinea pigs were exposed through oral administration to varying concentrations in order to determine the lethal dose (LD_{50}) of the various compounds. In rats, the LD_{50} identified for 2–ME, 2–MEA, 2–EE and 2–EEA were respectively 2460 mg/kg, 3920 mg/kg, 3000 mg/kg and 5100 mg/kg body weight. In guinea pigs the LD_{50}'s for these same 4 compounds were 0.95, 1.25, 1.4 and 1.91 mg/kg body weight, respectively. The authors noted that these compounds induced narcosis but only at exposures at or above the LD_{50}. Pathological examination revealed the primary effect was kidney damage.

Reviews of the data also report relatively high lethal doses (LD50) and lethal concentrations (LC_{50}) (Exs. 5–134, 5–046 and 5–140). For example, the LC_{50}'s observed in mice exposed for 7 hours to 2–EE and 2–ME were 1820 ppm and 1480 ppm, respectively. A LC_{50} of 7000 ppm was observed among rats exposed to 2–MEA for 4 hours. For 2–EEA, a LC_{50} of 4000 ppm was reported for cats exposed from 4 to 6 hours. In most cases deaths were attributed to lung and kidney damage. Pathological examination revealed lung edema, slight liver damage and marked kidney injury. Prior to death animals exhibited difficulty in breathing, sleepiness, weakness and loss of muscular coordination.

Little evidence is available on acute toxicity in humans. Most of the available evidence is limited to case studies of accidental poisonings where glycol ethers have been ingested (Ex. 5–134, pp. 21–24). For example, two men hospitalized after drinking 100 ml of 2–ME, exhibited signs of confusion, disorientation, and progressive muscular weakness. They also suffered from hyperventilation, tachycardia and moderate renal failure. Similarly a woman who drank 40 ml of 2–EE exhibited renal failure and adverse central nervous system effects (e.g., vertigo and unconsciousness). Other effects observed among humans after acute exposures include irritation of the eyes and mucous membranes including the respiratory system.

D. Background Discussion on Reproductive and Developmental Toxicity

Reproductive and developmental effects are the primary health concerns associated with exposure to ethylene glycol ethers. The term reproductive effects refers to effects on the male and female reproductive systems and the term developmental effects refers to effects on the developing organism. Various terms have been used in the field of reproductive and developmental toxicology, many of which are ambiguous and open to different interpretations. In order to provide guidance and assistance in assessing reproductive and developmental risks, the EPA has published proposed guidelines on assessing female and male reproductive toxicity (Exs. 5–122 and 5–123) and developmental toxicity (Exs. 5–106, 5–153). These guidelines discuss many of the critical issues in reproductive and developmental toxicology. Much of the terminology in the following discussion is adopted and modified from the EPA guidelines.

Male reproductive toxicity is generally defined as the occurrence of adverse effects on the male reproductive system that may result from exposure to chemical, biological, or physical agents. The toxicity may be expressed as alterations to the male reproductive organs and/or related endocrine system. For example toxic exposures may interfere with spermatogenesis (the production of sperm), resulting in adverse effects in number, morphology (e.g., size and shape), or function (e.g., motility) of sperm. These effects in turn may adversely affect fertility. The process of spermatogenesis is a cyclical process marked by distinct stages that may be sensitive to toxic agents. In this process germ cells (spermatogonia) differentiate into primary spermatocytes then to secondary spermatocytes, to spermatids and finally into spermatozoa. Men produce sperm continually from puberty throughout life and thus the risk of disrupted spermatogenesis is of concern for the entire adult life of a man. Reproductive toxicity may also include dysfunction in sexual behavior or processes which are integral to reproductive success.

Female reproductive toxicity is generally defined as the occurrence of adverse effects on the female reproductive system that may result from exposure to chemical, biological, or physical agents. This toxicity includes adverse effects in sexual behavior, onset of puberty, ovulation, menstrual cycling, fertility, gestation, parturition, lactation, or premature reproductive senescence (the loss of reproductive capability associated with aging).

Developmental toxicity is defined as adverse effects on the developing organism that may result from exposure prior to conception (either parent), during prenatal development, or postnatally to the time of sexual maturation.

Developmental effects induced by exposures prior to conception may occur, for example, when mutations are chemically induced in sperm. If the mutated sperm fertilizes an egg, adverse developmental effects may be manifested in developing fetuses. Mutations may also be induced in the eggs. Such effects are often referred to as a dominant lethal effects.

The major manifestations of developmental toxicity include: (1) Death of the developing organism, (2) structural abnormality, (3) altered growth, and (4) functional deficiency. Structural abnormalities include malformations and variations. As stated in the EPA Guidelines, a malformation is usually defined as a permanent structural change that may adversely affect survival, development, or function. These types of effects are often referred to as teratogenic effects. The term variation is used to indicate a divergence or a change in structure which is beyond the range of what is generally considered to be normal development. This divergence may not adversely affect survival, or health. However as noted by EPA ints guidelines, distinguishing between variations and malformations is difficult since there exists a continuum of responses from the normal to the extreme deviant. There is no generally accepted classification of malformations and variations. Other terminology that is often used, but no better defined, includes anomalies, deformations, and aberrations.

Altered growth is an alteration in offspring organ or body weight or size. Altered growth can be induced at any stage of development, may be reversible, or may result in a permanent change. Functional deficiency includes alterations in the functional competence of an organ or a variety of organ systems. This functional deficiency may be expressed as behavioral abnormalities. Such effects may often not be apparent at birth but may instead be noted during postnatal development. Similarly, exposure during development may lead to adverse reproductive functioning. For example, a female's entire complement of oocytes (eggs) are formed during gestation, as opposed to males who produce spermatocytes

continually throughout their adult life. Thus toxic insults during gestation may adversely effect oogenesis (the formation of eggs). However because structural and functional maturity of eggs does not occur until puberty, adverse effects may not be manifested until females reach reproductive maturity.

One of the critical phases in development, is the period of gestation referred to as organogenesis. During this phase of gestation, embryonic cells migrate and associate into tissues and organ rudiments and establish the basic organizational patterns of organ systems. Because this is a period marked by rapid cell proliferation and organ development it is vulnerable to the induction of structural defects. It is generally assumed that a single exposure, of sufficient dose, during such critical periods of development, may be sufficient to produce an adverse developmental effect. Thus repeated exposures may not be necessary to induce developmental toxicity. However developing organisms are also known to have the capacity to compensate for or to repair certain amounts of damage at the cellular, tissue or organ level. Thus it is also generally assumed that there may be thresholds for developmental toxins.

The level of concern for a developmental toxic effect is related to several issues, including the relative toxicity of an agent to the offspring versus the adult animal and the long-term consequences of findings in the fetus or neonate. The developing organism is dependent on the maternal animal to provide nutrients and to maintain a protective environment in which the conceptus can grow and develop. Thus any agent which adversely affects the maternal animal may have the potential to adversely affect the offspring. However it is often difficult to differentiate between effects which are a result of stress to the maternal animal and effects which are solely a result of the sensitivity of the developing organism. Those agents which produce developmental toxicity at a dose that is not toxic to the maternal animal are of the greatest concern because the developing organism appears to be more sensitive than the adult. The adult/developmental toxicity ratio (A/D Ratio) was introduced to account or describe the differential susceptibility between the maternal animal and the developing organism (Exs. 4–147 and 5–106). This ratio is calculated by dividing the Lowest Observed Effect Level (LOEL) in the maternal animal by the LOEL observed for the developing organism. A/D ratios greater than 1 suggest that the developing organism is more sensitive to a chemical insult than the mother and is therefore of greater concern. However, there is no consensus on the predictive value of the A/D ratio (Exs. 5–098 and 5–099). One reason is that the A/D ratio can be influenced by the design of the underlying bioassay (e.g., the spacing of doses chosen for study). Secondly, the maternal-developmental relationship may be misrepresented if insensitive developmental endpoints are compared to sensitive maternal endpoints or vice versa. In these cases the power of the experimental study may influence the level at which an effect is observed and thus influence the calculation of the A/D ratio. Thus, developmental effects which are produced only at maternally toxic doses cannot be discounted as being secondary to maternal toxicity. Current information is inadequate to assume that developmental effects at maternally toxic doses result only from the maternal toxicity. Rather, when the lowest observed effect level is the same for the adult and the developing organism, it may simply indicate that both are sensitive to that dose level. Moreover, the maternal effects may be reversible while effects on the offspring may be permanent. These are important considerations for agents to which humans may be exposed at minimally toxic levels in the workplace.

Most of the evidence on the reproductive and developmental toxicity of the four subject glycol ethers, as will be discussed later, is limited to data from experimental studies in mice, rats and rabbits. This, in major part, is due to the difficulty in conducting epidemiological analyses to detect adverse reproductive and/or developmental outcomes. For example, many outcomes such as early embryonic loss, spontaneous abortions, or reproductive capacity of offspring are not easily observed in humans. Epidemiological analysis is also complicated by the fact that, because there is a wide spectrum of inter-related effects, different types of effects may occur at different exposure levels. Thus multiple endpoints may result from a single toxicant. Some reproductive outcomes are rare and thus a large number of births are required to give the study enough power to detect a possible effect. For example, it has been estimated that to detect a two fold increase in spontaneous abortions a sample size of 322 pregnancies (161 exposed and 161 controls) would be required (Ex. 5–135, p. 167). More rare outcomes such as severe mental retardation, neural tube defects and chromosomal abnormalities would require samples sizes of 1,819, 8,986 and 17,907 live births respectively, to detect a two fold increase. Large populations of workers would be required to observe this many pregnancies or live births. Adequate sample sizes may be difficult to obtain due to factors such as marital status, education, age, use of birth control or prior reproductive history. These factors may affect couples' ability or attempts to have children and thus affect the number of outcomes available for study.

Because adequate human data are rarely available for reproductive or developmental outcomes, animal studies have been used and are generally considered to be useful in the prediction of reproductive/developmental toxicity for humans. A basic tenet of toxicology is that if an agent produces adverse effects in experimental animals, this agent may pose potential hazards to humans. This tenet is supported by reviews of studies in both humans and experimental animals on the reproductive effects of selected agents which have shown parallels among the adverse effect observed in animal experiments and effects reported in humans (Exs. 4–103, p. 96 and 5–135, pp. 169–170). For example, disturbances in estrous cycles in rats were observed after exposure to benzene and menstrual disorders were reported among humans exposed to benzene. DBCP induced testicular atrophy and decreased fertility in rats and has also been associated with similar effects in men. EDB has caused sterility in rats and reduced fertility in men. Similar concordance of effects have been observed with other agents such as carbon disulfide, arsenic, lead, alcohol and vinyl chloride.

While there are parallels in observed effects between experimental animals and humans, it is not necessarily assumed that there is site concordance of effects seen in animals and effects potentially occurring in humans. That is, effects observed in experimental animals may not exactly be the same as those which may occur in humans. For example within the period of organogenesis, different organ systems may form at different times. In addition an individual organ system may have a narrow time span when it is vulnerable. Furthermore, the time during organogenesis when a particular organ system develops may vary across species. Therefore, exposures occurring in different developing systems or even in similar systems, but at different times, may result in different types of adverse developmental effects. Thus although a particular adverse effect may not be observed in humans, the

presence of the effect in experimental animals indicates the potential of an agent to perturb development and therefore is an outcome of concern for human development.

E. Effects in Animals

Experimental studies in rats, rabbits, mice and monkeys through inhalation, dermal and oral exposure, have shown clearly and consistently that 2–ME, 2–EE and their acetates cause adverse hematologic, reproductive and developmental effects. These effects include decreased white and red blood cell counts, decreased hemoglobin concentrations, decreased fertility, decreased sperm count, decreased testes size and weight, early embryonic death, fetal malformations, delayed development and behavioral and neurochemical alterations.

1. Male Reproductive Toxicity

a. *2–ME.* 2–ME was shown to induce testicular degeneration in rats by Rao et al. (Ex. 4–142). In this study male rats were exposed, by inhalation, to 0, 30, 100 or 300 ppm 2–ME, 6 hours/day for 13 weeks. These rats were then bred with unexposed females to evaluate male reproductive function and dominant lethality. Dominant lethal tests are conducted to detect mutagenic effects in the spermatogenic process which may lead to fetal effects on the embryo/fetus. Male rats exposed to 300 ppm exhibited significant decreases in testes size and atrophy of the seminiferous tubules. Only 4 of 20 unexposed females mated to this group of exposed males were successfully inseminated and all 4 pregnancies ended in resorptions. The authors stated that at 300 ppm there was a complete suppression of fertility which they attributed to an interference in spermatogenesis. No significant decreases in fertility were reported for males exposed to 100 or 30 ppm 2–ME. Because no litters were produced in the 300 ppm exposure group, the authors stated that dominant lethality could not be assessed. However the authors did not address the issue as to whether the resorptions observed in the 300 ppm group may have been a possible dominant lethal effect. Among the litters from rats exposed to 30 and 100 ppm there were no significant increases in preimplantation loss or resorption rate compared to controls. The authors thus concluded that there was no dominant lethal effect from exposure at these doses. The authors did note that there was a significant increase in the resorption rate at 30 ppm. However because this effect was not observed at 100 ppm, it was not considered to be treatment related. Thus the NOEL for this study was identified as 100 ppm.

In this same study by Rao et al., male rats exposed at 300 ppm were additionally bred with unexposed females 13 and 19 weeks after exposure was terminated. Fifty percent of the males sired litters with viable implantations. Rats bred 13 weeks post exposure had regained 55% fertility. Rats bred 19 weeks post exposure had regained 50% fertility. These results suggest that adverse effects on fertility may be partially reversible after exposure is stopped. However these results also indicate that recovery may not be complete as 50% of the exposed males still showed signs of reduced fertility.

Testicular degeneration was also observed in a study by Miller et al. (Ex. 5–023, see also Ex. 4–045) where both rats and rabbits were exposed to 0, 30, 100, or 300 ppm 2–ME for 6 hours/day, 5 days/week for 13 weeks. Rats exposed to 300 ppm exhibited significant decreases in testes weight as a result of degeneration of the germinal epithelium of the seminiferous tubules. The authors reported that rats exposed to 300 ppm showed reduced numbers of spermatozoa and degenerating spermatozoa in the epididymis. However the authors did not state whether these were significant reductions. No treatment related effects were observed among rats exposed to 30 or 100 ppm 2–ME. A more sensitive response was observed among the exposed rabbits which exhibited testicular effects at 300, 100 and 30 ppm. All male rabbits exposed to 300 ppm had small and flaccid testes. Significant but less severe decreases in testes size were observed in rabbits exposed at 100 and 30 ppm. Histological examination of the rabbits revealed that the testicular effects were related to atrophy of the seminiferous tubules. The effects observed in rabbits at 30 ppm were questioned by the authors as they noted that only a small percentage of the animals (1 of 5 rabbits) were effected and rabbits exposed to 30 ppm in a subsequent study (Ex. 5–057) showed no adverse testicular response.

2–ME has also been shown to induce adverse testicular effects in shorter term tests. In an inhalation study by Doe et al. (Ex. 4–111) male rats were exposed to 100 or 300 ppm 2–ME, 6 hours/day for 10 consecutive days. Adverse testicular effects were only observed among rats exposed at 300 ppm. In these animals the testes were significantly decreased in both size and weight. Histological examination of the testes revealed atrophy of the seminiferous tubules and degeneration of the primary spermatocytes. No significant adverse effects were observed among rats exposed at 100 ppm, and thus this level was identified as the NOEL.

Similarly adverse effects were produced in a short term (9-day) inhalation test conducted by Miller et al. (Ex. 4–132). Male rats and mice were exposed 6 hours/day to 0, 100, 300 or 1000 ppm 2–ME. Severe testicular degeneration was observed in both rats and mice exposed at 1000 ppm. Histopathological examination revealed a degeneration and necrosis of all spermatogenic elements as well as a cessation of spermatogenesis. Similar but less severe testicular effects were observed in the 300 ppm exposure groups. However these effects were not statistically significantly different from control groups. No treatment related changes were observed in the 100 ppm exposed animals.

2–ME also induces adverse testicular effects when administered orally. For example, Nagano et al. (Ex. 4–135) exposed male mice to 62.5, 125, 250, 500, 1000, or 2000 mg 2–ME/kg body weight, 5 days a week for 5 weeks. In the high dose group 4 out of 5 mice died before examination. Significant decreases in testes weight were observed for the 1000, 500, and 250 mg/kg dose groups as a result of seminiferous tubule atrophy. The authors noted that the degree of changes in atrophy were related to increases in dosage thus implying the presence of a dose-response relationship. For example histopathological examination showed that at 1000 mg/kg no germ cells were present. At 500 mg/kg only small numbers of spermatozoa, spermatocytes and spermatids were present.

Similar effects were observed by Foster et al. (Ex. 4–119) where male rats were exposed orally to 50, 100, 250 or 500 mg 2–ME/kg body weight for 11 days. A significant degeneration of the testes was observed in the 100, 250 and 500 mg/kg dose groups. A single dose exposure to 100 mg/kg 2–ME resulted in testicular damage within 24 hours of exposure. In this study meiotic cells of the testes were identified as the primary site of testicular damage. Primary spermatocytes were damaged initially. Prolonged exposure damaged late spermatocytes and led to a depletion of the spermatid population. Results of this study indicated that testicular damage may be partially reversible. After exposure was stopped, testes weight returned to control values and spermatogenesis resumed. However some animals exposed at high doses still exhibited a small proportion of atrophied seminiferous tubules. Thus the authors concluded that prolonged

high exposure may prevent total recovery of testicular function.

Adverse effects in spermatogenesis and mating performance were observed in short term tests conducted by Chapin (Ex. 5–007). In the first phase of this study male rats were exposed to 0, 50, 100 or 200 mg 2–ME/kg body weight for 5 days and then mated with untreated females for 8 weeks. Significant decreases in the percentage of pregnancies and the number of live fetuses were observed among females mated with males from the 200 and 100 mg/kg dose groups. No significant effects were observed among females mated with 50 mg/kg dosed males. Females mated to rats exposed at 200 mg/kg exhibited an increase in the incidence of resorptions but only at weeks 5 and 6. No increases in resorption rates were observed among any other group. Significant increases in preimplantation losses were observed among females mated with males exposed to 200 and 100 mg/kg. The authors noted that the decrease in litter size is a possible indication of a dominant lethal effect. However because there was no significant increase in the number of dead fetuses and only a slightly significant increase in resorptions at weeks 5 and 6 of the high dose group, the authors stated that the decrease in litter size was probably due to decreased number of viable sperm number rather than a dominant lethal effect. The authors added that this conclusion is supported by the evidence of preimplantation loss as well as by the findings of other researchers (e.g., Rao et al., Ex. 4–142).

In the second phase of this study by Chapin, additional groups of male rats were exposed similar to rats in the first phase of the study but this time were not allowed to mate. Rats exposed at 100 and 200 mg/kg showed significant sperm count reductions throughout the study. In addition, these groups showed significant decreases in the percentage of motile sperm and increases in the frequency of abnormal sperm morphology. A reduction in sperm counts was observed in the 50 mg/kg group at week 5 only. In this group sperm motility was unaffected. The findings of this study also indicated that as dose increased, different types of testicular cells were affected. For example, at 100 mg/kg only spermatocytes were affected, while at 200 mg/kg the later stage spermatids and spermatogonia were effected.

In a subsequent study using a similar protocol, Chapin et al. (Ex. 5–006) examined testicular recovery from 2–ME treatment. Again male rats were exposed orally to 0, 50, 100, or 200 mg 2–ME/kg body weight for 5 days and followed for 8 weeks. Rats exposed to 200 and 100 mg 2–ME/kg exhibited significant signs of testicular damage including abnormal sperm morphology, delayed spermatogenesis, and cell death. All animals exposed to 200 mg 2–ME/kg showed significant signs of testicular toxicity during the first week of observation. These animals exhibited widespread death of all stages of spermatocytes and abnormal sperm morphology. By weeks 5–8, 50% of the tubules appeared normal for the 200 mg/kg exposed groups. Cell death and abnormal sperm morphology were also observed at 100 mg/kg. Similarly by week 8 a 50% recovery was noted. In the 50 mg/kg exposure group, changes in morphology were not noted until week 4. By week 8 no treatment related changes were observed.

Similar findings have been reported in more recent studies by Anderson et al. (Ex. 5–100). Male mice and rats were exposed to single doses of 0, 500, 750, 1000 or 1500 mg 2–ME/kg body weight. Selected groups were additionally mated to untreated females to examine dominant lethality. As in earlier studies increasing doses resulted in increased levels of testicular damage. In the rat, testes weight and sperm counts were significantly reduced at all dose levels. Abnormal sperm morphology was also observed among treated rats. In mice, significant decreases in testes weight and sperm count were observed in the 750 mg/kg group at week 3 and in the 500 and 1000 mg/kg groups at week 4. In the dominant lethal studies female rats mated to exposed males, exhibited a significant reduction in the number of implants. No statically significant increase in the incidence of abnormalities in offspring or any other signs of dominant lethality were observed among the rat offspring. In the mice, no significant decreases in fertility or signs of dominant lethality were observed.

b. *2–MEA*. Evidence strongly indicates that 2–MEA will induce adverse reproductive effects similar to its parent glycol ether 2–ME. As was discussed in the section on metabolism, MAA is thought to be the primary metabolite of 2–MEA. Metabolic studies indicate that the adverse reproductive effects of 2–ME are mediated by its primary metabolite methoxyacetic acid (MAA). Therefore it is likely that equal doses of 2–MEA would induce adverse reproductive effects similar to 2–ME, as these two compounds appear to follow similar metabolic pathways.

The metabolic data are supported by the findings of testicular degeneration in mice by Nagano et al. (Ex. 4135). In this study, male mice were orally exposed to 62.5, 125, 250, 500, 1000, or 2000 mg 2–MEA/kg body weight, 5 days/week for 5 weeks. Significant decreases in testicular weight were observed only in the 500 mg/kg dose group. Converting this dosage to mmole/kg the authors noted that on an equimolar basis 2–ME and 2–MEA resulted in similar effects.

c. *2–EE*. Like 2–ME, 2–EE has also been shown to cause male reproductive toxicity in laboratory animals although 2–EE has not been tested as extensively. For example, Barbee and Terrill et al. (Exs. 5–084 and 4–108) exposed male rats and rabbits by inhalation to 25, 100 or 400 ppm of 2–EE, 6 hours/day, 5 days a week, for 13 weeks. In rats the only significant effects observed were decreased pituitary weights at 400 ppm. Pathological examination of these organs did not reveal any lesion indicative of a treatment related effect. Thus the authors concluded that the increased pituitary weight was not likely to be a treatment related effect. Rabbits exhibited a significant decrease in testes weight when exposed to 400 ppm. Based on the pathological analyses this decreased weight was attributed, by the authors, to the degeneration of the seminiferous tubules. No adverse effects were observed at 100 or 25 ppm. From these findings the NOEL for reproductive effects in male rats was identified as 400 ppm while the NOEL for reproductive effects in male rabbits was 100 ppm.

2–EE also induces testicular degeneration after oral exposure. For example, Nagano et al. (Ex. 4–135) exposed male mice to 500, 1000, 2000, or 4000 mg 2–EE/kg body weight, 5 days/week over a 5 week period. At 4000 mg 2–EE/kg, all animals died before examination. Significant decreases in testes weights were observed in the 1000 and 2000 mg/kg exposure groups. Histopathological examinations revealed dosage related degrees of seminiferous atrophy among groups exhibiting a significant reduction in testes weight. For example, at 500 mg/kg no significant effects on the testes were observed. At 1000 mg/kg there were significant reductions in the testes weight and a corresponding decrease in the number of spermatozoa, spermatids and spermatocytes. At 2000 mg/kg there were also a significant decrease in testes weight with a corresponding decrease in spermatozoa and spermatids had completely vanished.

Similar effects were observed in short term oral studies by Foster et al. (Ex. 4–119). In this study male rats were exposed to 250, 500 or 1000 mg 2–EE/kg body weight for 11 days. Significant decreases in testes weight were

observed at 500 and 1000 mg/kg after the 11th day of exposure. The authors noted that rats appeared to be slightly more sensitive than mice. Histological examination of the testes revealed spermatocyte degeneration of the primary and secondary spermatocytes. No significant testicular abnormalities were observed at 250 mg/kg. The NOEL was identified as 250 mg/kg body weight.

d. *2-EEA*. As in the case of 2-MEA, evidence strongly indicates that 2-EEA will induce adverse reproductive effects similar to 2-EE. As discussed earlier, metabolic studies indicate that ethoxyacetic acid (EAA) is the primary metabolite of both 2-EE and 2-EEA and thus 2-EEA is likely to produce similar effects to those of 2-EE. This evidence is supported by the studies of Nagano et al. (Ex. 4-135) who exposed male mice to 500, 1000, 2000, or 4000 mg 2-EEA/kg body weight, 5 days/week, for 5 weeks. Significant decreases in testicular weight were observed in mice exposed to 1000, 2000 and 4000 mg/kg 2-EEA. Histopathological examinations revealed dose related changes in seminiferous tubule atrophy. For example at 200 and 100 mg/kg the exposed groups exhibited a significant reduction in testes weight and a corresponding reduction in the number of spermatozoa, spermatids and spermatocytes. At 400 mg/kg there was also a significant reduction in testes weight but at this dose the spermatozoa and spermatids had completely vanished. Conversion of dosage to mmole/kg revealed that equimolar doses of 2-EE and 2-EEA induced similar effects. Thus the authors concluded that these results suggest that a glycol ether and its corresponding acetate have similar toxic potential.

In summary, the evidence clearly shows that 2-ME, 2-EE and their acetates induce adverse male reproductive effects. Both through inhalation and oral exposure of these compounds, several animal species have exhibited infertility and testicular degeneration.

2. Maternal/Developmental Effects

2-ME and 2-EE and their acetates also induce adverse developmental and maternal effects. Rats, mice, rabbits and monkeys after oral and dermal exposures to these compounds have exhibited adverse effects including decreased maternal weight gain, increased lengths of gestation, increased resorptions, fetal malformations and delayed development.

a. *2-ME*. Hanley et al. (Exs. 4-120, 4-106, and 4-042a) studied the effects of inhaled 2-ME on fetal development in rats, mice and rabbits. Pregnant rats were exposed to 0, 3, 10, or 50 ppm 2-ME for 6 hours/day on days 6 through 15 of gestation. Pregnant mice were exposed to 0, 10 or 50 ppm for 6 hours/day on days 6 through 15 of gestation. Pregnant rabbits were exposed to 0, 3, 10, or 50 ppm for 6 hours/day on days 6 through 18 of gestation. Female rats exposed to 50 ppm exhibited a significant decrease in maternal body weight gain. No other signs of maternal toxicity for any other test doses were noted. A significant decrease in maternal body weight gain was also observed in mice but again only at 50 ppm. The only statistically significant dose-related developmental effects in rats were an increased incidence of lumbar spurs and delayed ossification after exposure to 50 ppm 2-ME. In mice the only significant dose related developmental effects observed were increased incidence of lumbar spurs and unilateral testicular hypoplasia at 50 ppm. No statistically significant effects were observed at 10 or 3 ppm in mice. Rabbits however exhibited a more sensitive response to 2-ME exposure. At 50 ppm significant decreases in maternal body weight gain and increases in maternal liver weight were observed. At 50 ppm rabbits had a significant increase in the incidence of resorptions. Fetuses from this group exhibited a significant decrease in mean fetal body weight and a significant increase in the incidence of malformations of all organ systems (e.g., joint contracture, shortness and absence of digits, ventricular septal defects of the heart, missing paw bones and rib malformations). Despite the strong effect observed at 50 ppm, there was no statistically significant increased incidence of malformations at 10 or 3 ppm for rabbits. However a statistically significant increase in resorption rate was observed at 10 ppm. The authors of the study however dismissed this effect stating that the observed increase was a result of an unusually low concurrent control value for resorptions. The authors stated that the observed increase at 10 ppm was within the range observed among historical controls.

Similar results were observed by Doe et al. (Ex. 4-111). In this study pregnant rats were exposed by inhalation to 0, 100 or 300 ppm 2-ME for 6 hours/day on days 6 through 17 gestation. Rats exposed to 300 ppm exhibited a significant decrease in maternal body weight gains and failed to produce any litters. Nine of the 20 rats exposed to 100 ppm 2-ME produced litters, but the gestation period was significantly increased over controls. Exposure to 100 ppm also induced a significant reduction in the total numbers of pups, the proportion of pups live at birth and the proportion of pups surviving to day 3 postpartum. The authors stated that all pups from the 100 ppm group were normal externally, but no further examination of the pups was performed to determine whether or not there was any other evidence of a developmental effect. Because statistically significant effects were observed at both of the tested doses a NOEL was not established in this study.

Inhalation studies by Nelson et al. (Ex. 4-136) examined the behavioral and neurochemical effects in offspring after parental exposure to 2-ME. In these studies both male and female rats were exposed to 25 ppm 2-ME. Twenty-five ppm was chosen as a test level as this dose represented the current allowable limit of exposure under the OSHA standards. Male rats were exposed for 7 hours/day, 7 days/week, for 5 weeks. These rats were then mated with untreated females which were allowed to deliver their young. Separate groups of pregnant rats were exposed 7 hours/day on days 7 through 13 or days 14 through 20 gestation and were also allowed to deliver their young. Behavioral testing to evaluate central nervous system effects (i.e. motor, sensory and cognitive functions) were conducted on offspring from both groups of rats and the brains from selected offspring were analyzed for neurochemical levels (e.g., dopamine, acetylcholine, and norepinephrine). The only statistically significant effect in behavior observed was the difference in avoidance conditioning in offspring from female rats exposed on days 7-13 gestation. In the neurochemical analyses offspring from both the paternally and maternally exposed rats exhibited significant neurochemical deviations particularly in the brainstem and cerebrum. These results indicate that both paternal and maternal exposure may result in teratogenic effects on the offspring. However only one dose was used in this study and thus no conclusions about dose-response effects or NOEL's can be drawn.

Studies have shown that oral exposure to 2-ME also induces adverse developmental effects. Nagano et al. (Ex. 5-026) orally exposed pregnant mice to 31.25, 62.5, 125, 250, 500 or 1000 mg 2-ME/kg body weight on days 7 through 14 gestation. A significant increase in the incidence of dead fetuses was observed among mice exposed to 250, 500 and 1000 mg/kg 2-ME. There were also significant reductions in fetal weight among fetuses from the 125 and 250 mg/kg dosed groups. At 250 mg/kg

there was a significant increase in the incidence of gross malformations, including exencephaly, umbilical hernia and abnormal fingers. Increased skeletal malformations including fused ribs, fused vertebrae, spina bifida, syndactly (fused fingers), oligodactly (absence of fingers), and polydactly (extra fingers) were observed after exposure to 62.5, 125, and 250 mg/kg. Delayed ossification was observed in fetuses from all dose levels. Thus in this study a NOEL was not established.

Similarly, Toraason et al. (Ex. 5–042) exposed pregnant rats by gavage to 0, 25, 50, or 100 mg 2–ME/kg body weight on days 7 through 13 gestation. At day 20 of gestation fetuses were removed for electrocardiographic (EKG) analysis and later examined for physical defects. The EKG evaluation involved measuring rhythm variations of the heart, the presence or absence of peaks produced by EKG output (i.e., R, QRS, QT and R–R peaks). All fetuses were resorbed at 100 mg/kg 2–ME and thus no EKG analysis was possible at this dose. There was a significant increase in the number of fetuses with abnormal QRS's from both the 25 and 50 mg/kg exposure groups. At these doses no other EKG characteristics were significantly affected by 2–ME exposure. The most prevelant cardiovascular defect, ventricular septal defect and ductus arteriosis, was observed in fetuses from the 50 mg/kg exposure group. However the authors concluded that the abnormal QRS's did not appear to be related to the cardiovascular malformation. For example the authors noted that four fetuses with abnormal QRS's had heart defects but 4 fetuses without heart malformations also had abnormal QRS's. The authors attributed the abnormal QRS's to a delay in conduction. Nevertheless the results of this study indicate that 2–ME exposure may adversely affect fetal heart function.

Adverse developmental effects of 2–ME have also recently been reported in non-human primates. Scott et al. (Ex. 5–125) exposed pregnant monkeys by gavage to 0, 12, 24 or 36 mg/kg body weight, on days 20 to 45 of gestation. Signs of maternal toxicity including a reduction in maternal body weight and loss of appetite were observed at all dose levels. At the highest dose (36 mg/kg) all pregnancies ended in abortion. Three of 10 pregnancies were also aborted in the 24 mg/kg dose group and 3 of 13 pregnancies were aborted in the 12 mg/kg dose group. Fetuses were removed on day 100 of gestation and examined for abnormalities. No malformations were observed among any of the fetuses surviving to day 100 of gestation.

b. *2–MEA*. The studies discussed above clearly show that 2–ME induces adverse maternal and developmental effects. As discussed earlier, metabolic data indicate that the toxicity of 2–ME is mediated by its primary metabolite, methoxyacetic acid (MAA). MAA is also the primary metabolite of 2–MEA and thus it is likely that 2–MEA will induce similar adverse effects to 2–ME.

c. *2–EE*. Similar to 2–ME, 2–EE has also induced adverse developmental effects. Doe and Tinston et al. (Exs. 5–071, 4–038, 4–039 and 4–105) exposed pregnant rats, by inhalation, to 0, 10, 50 or 250 ppm 2–EE for 7 hours/day on days 6 through 15 gestation. Pregnant rabbits were exposed to 0, 10, 50 or 175 ppm 2–EE for 7 hours/day on days 6 through 18 gestation. No adverse maternal effects were observed among either exposed rats or rabbits. Among rats, exposure to 250 ppm induced a significant increase in late interuterine death and a decrease in fetal growth. Fetuses from the 250 ppm group exhibited significant increases in skeletal defects, (e.g., partial and/or nonossification of the skull and the thoracic and lumbar vertebrae) and increases in sternebrae abnormalities. No significant adverse effects were observed in the 50 or 10 ppm exposed groups. In the high dose rabbits (175 ppm) there were no significant increases in late interuterine death or decreases in fetal growth. The only statistically significant effect observed at this dose was an increased number of fetuses with extra ribs. As neither species showed any significant adverse effects at 50 ppm, the authors stated that a clear no effect level of 50 ppm for 2–EE was identified in this study.

Similar findings were reported by Andrew et al. (Exs. 4–065 and 5–069) who exposed pregnant rabbits by inhalation to 0, 160, or 615 ppm 2–EE for 7 hours/day on days 1–18 gestation. Rabbits exposed to 615 ppm exhibited maternal toxicity including severe anorexia, reduced weight gain and an increased incidence of maternal mortality (5 of 19 died). Rabbits exposed to 160 ppm exhibited significant reductions in food consumption and maternal body weight gain. All litters, from the surviving dose, in the 615 ppm exposure group, were resorbed. Resorptions were also significantly increased in the 160 ppm exposure group. In addition there was a significant reduction in the number of live fetuses. Fetuses from the 160 ppm group exhibited a significant increase in malformations including cardiovascular effects (e.g., fused aorta and pulmonary artery), renal effects (e.g., fused kidneys) and skeletal effects (e.g., extra and malformed ribs).

In the Andrew study, female rats were also exposed to 2–EE by inhalation to 0, 150, or 650 ppm for 7 hours/day, 5 days/week for a 3 week pregestational period followed by exposure to 0, 200 or 760 ppm 2–EE during days 1–19 gestation. Pregestational exposure had no effect on maternal toxicity or the establishment of pregnancy. Significant decreases in liver weights and kidney weights were observed in the rats exposed to 760 ppm during gestation. All litters in the 760 ppm exposure group were resorbed. The number of resorptions was not increased in the 200 ppm exposure group. However exposure to 200 ppm during gestation significantly increased the incidence of cardiovascular malformations, and skeletal defects (e.g., extra ribs and vertebrae, and reduced skeletal ossification) in the pups.

Nelson et al. (Ex. 4–138) examined developmental effects in the behavior of offspring from rats exposed to 2–EE. Pregnant rats were exposed by inhalation to 100 ppm 2–EE, 7 hours/day on days 7–13 or days 14–20 of gestation. Behavioral tests were subsequently conducted on offspring from the control and exposed groups to evaluate CNS function (e.g., motor, sensory and cognitive functions). Selected offspring were also used for neurochemical analyses (e.g., acetylcholine, norepinephrine and dopamine levels). The only evidence of any maternal toxicity was a significant increase in the duration of pregnancy compared to controls. Offspring from rats exposed on days 7–13 of gestation exhibited impaired performance in the rotorod and open field test and marginal superiority in the avoidance conditioning test. Offspring from the 14–20 gestation day exposure group had impaired performance in the running wheel and avoidance conditioning tests. Neurochemical analyses revealed that in both the 7–13 and 14–20 day exposure groups, whole brain samples from offspring showed significantly decreased levels of norepinephrine. In the 7–13 day groups the cerebrum and cerebellum had significant elevations in acetylcholine and dopamine. Thus the results of this study indicate that at 100 ppm 2–EE can induce behavioral and neurochemical alterations. Because only one dose was tested the study was not able to evaluate any potential dose-response trend or identify a NOEL.

2–EE has also induced adverse developmental effects after dermal exposure. Hardin et al. (Ex. 4–121) applied 0.25 ml or 0.50 ml 2–EE

dermally four times daily to pregnant rats on days 7–16 gestation. Rats exposed to 0.50 ml 2–EE exhibited ataxia (loss of muscular coordination) and reduced body weight gain during the later days of exposure. No other significant signs of material toxicity were noted. All fetuses from the 0.50 ml exposure group were resorbed. There was also a significant increase in the numbers of resorptions in the 0.25 ml exposure group. The 0.25 ml group also exhibited significantly increased incidence of cardiovascular malformations and skeletal defects (e.g., incomplete ossification, extra and malformed ribs and vertebrae). The results of this study indicate that skin exposure is a significant route of exposure for inducing teratogenic effects.

d. *2–EEA*. Inhalation, dermal and oral studies have clearly shown a teratogenic response from exposure to 2–EE. As discussed earlier, metabolic studies also indicate that it is the primary metabolite, EAA, which is likely to be the active agent. EAA is also the primary metabolite of 2–EEA and thus it is likely that 2–EEA will induce teratogenic effects similar to 2–EE. Several inhalation studies support these conclusions. For example, Nelson et al. (Ex. 5–091) exposed pregnant rats by inhalation to 0, 130, 390, or 600 ppm 2–EEA, 7 hours/day, on days 7–15 gestation. At 600 ppm rats exhibited a significant decrease in maternal body weight. However the authors attributed this reduction in maternal weight at high dose to be due to resorptions. They thus concluded that no significant signs of maternal toxicity were observed. All fetuses from the 600 ppm group ware resorbed. Resorptions were also significantly increased in the 390 ppm exposure group. Fetuses from both the 390 and 130 ppm exposure groups exhibited significant decreases in weight, as well as significant increases in visceral malformations (e.g., septal defects of the heart and umbilical hernia) and skeletal defects (e.g., wavy and fused ribs). A NOEL was not established for this study.

Adverse effects were also reported by Doe et al. (Ex. 5–071) who exposed pregnant rabbits to 0, 25, 100 or 400 ppm 2–EEA for 6 hours/day on days 6 through 18 of gestation. Maternal toxicity was only observed among the 400 ppm exposed rabbits. In this group rabbits exhibited significant decreases in maternal body weight gain and food consumption. Mean live fetal weights were significantly reduced for fetuses from both the 400 and 100 ppm exposure groups. Fetuses from the 400 ppm exposure group exhibited significant increases in visceral defects (e.g., opaque/empty gall bladders, reduced/pale spleens) and skeletal defects (e.g., retarded ossification). Fetuses from the 100 ppm group also showed a significantly increased incidence of partial ossification. The only significant effect observed among fetuses from the low dose exposure group (25 ppm) was an extra center of ossification above the 1st sternebra. However because significant skeletal defects were observed only at 400 and 25 ppm the authors concluded that the effects at 25 ppm were probably not dose related and thus the NOEL for this study was 25 ppm.

More recent investigations by Tyl et al. (Ex. 5–124) have further confirmed the teratogenic potential of 2–EEA. In this inhalation study pregnant rabbits and rats were exposed to 0, 50, 100, 200 or 300 ppm 2–EEA, 6 hours/day for days 6–15 (rats) or days 6–18 (rabbits) of gestation. Rabbits exhibited significant decreases in maternal weight gain at 300, 200 and 100 ppm 2–EEA. After exposure to 300 and 200 ppm rabbits also exhibited significant decreases in gravid uterine weight and increases in absolute liver weight. Rats exposed to 2–EEA exhibited a significant decrease in maternal weight gain and food consumption at 300 and 200 ppm. A significant decrease in absolute liver weight was observed in rats at 100, 200 and 300 ppm. A significantly increased incidence of nonviable implantations was observed at 300 and 200 ppm in rabbits and at 300 ppm in rats. Rabbits also exhibited a significant increase in the incidence of resorptions after exposure to 300 ppm. Significant reductions in fetal body weight per litter were observed only among rats exposed to 300 and 200 ppm 2–EEA. Examinations of rabbit fetuses revealed a significant increase in the incidence of skeletal, cardiovascular and renal effects at 300 and 200 ppm. Similarly rats exhibited significant increases in malformations (e.g., cardiovascular, renal and skeletal effects) at both 200 and 300 ppm. No signs of maternal or fetal toxicity were observed at 50 ppm for either species and thus this exposure dose was identified as the NOEL for this study.

Similar to findings in dermal studies on 2–EE, studies on 2–EEA have also shown that dermal exposure induces teratogenic effects similar to those observed in inhalation studies. Hardin et al. (Ex. 5–073) dermally exposed pregnant rats to 0.35 ml 2–EEA, twice daily for days 7 through 16 of gestation. Dermal exposure induced significant decreases in maternal body weight gain, significant increases in the incidence of dead implants per litter and significant increases in the frequency of resorbed litters. Fetal examination revealed a significant increase in the incidence of cardiovascular and skeletal defects (e.g., reduced ossification and misshaped vertebrae). Thus the findings of this study further demonstrate the teratogenic potential of 2–EEA. In addition these findings indicate that dermal exposure may be a significant route of exposure.

3. Blood Effects

In addition to adverse reproductive and developmental effects, the animal studies provide evidence that 2–ME, 2–EE and their acetates also induce adverse hematological effects. Various studies in rats, rabbits and mice by both inhalation and oral exposure have demonstrated exposure related decreases in various blood parameters including white blood cell counts (WBC), hemoglobin concentration (HGB), platelet count and red blood cell count (RBC).

a. *2–ME and 2–MEA*. Miller et al. (Ex. 4–132) exposed rats and mice to 0, 100, 300 or 1000 ppm 2–ME, 6 hours/day for 9 days. At 1000 ppm both male and female rats exhibited significant decreases in WBCs, RBCs, HGB and packed cell volume. Male mice showed similar significant effects at 1000 ppm while female mice showed a significant decrease in WBC only at 1000 ppm. WBC was also decreased at 300 ppm for male rats and at 100 ppm for female rats.

In a similar study, Doe et al. (Ex. 4–111) exposed male rats to 0, 100 or 300 ppm 2–ME, 6 hours/day for 10 consecutive days. Exposures at 300 ppm resulted in significant reductions in whole blood count, red blood cell count, hemoglobin concentration, hematocrit and mean cell hemoglobin. No significant blood effects were observed among rats exposed to 100 ppm.

Thirteen week inhalation studies by Miller et al. (Ex. 5–023) support the authors' earlier findings (Ex. 4–132) of adverse blood effects. In this study rats and rabbits were exposed to 0, 30, 100 or 300 ppm 2–ME for 6 hours/day, 5 days/week for 13 weeks. Both rats and rabbits, male and female, exposed to 300 ppm 2–ME exhibited significant decreases in WBC, platelet counts, packed cell volume, and HGB. Rabbits exposed to 300 ppm also showed a significant decrease in RBC. No adverse effects in blood were observed at 100 or 30 ppm 2–ME for rats or rabbits.

Similarly, Hanley et al. (Ex. 4–120) exposed pregnant rats, rabbits and mice to 0, 3, 10 or 50 ppm 2–ME for 6 hours/day on days 6–15, 6–18 and 6–15

respectively. Rats exhibited a significant decrease in HGB and packed cell volume at all dose levels and a significant decrease in RBC at 50 ppm only. Neither mice nor rabbits showed any significant dose related blood effects.

Oral studies in mice by Nagano et al. (Exs. 5–026 and 4–135) have observed significant decreases in WBC after high dose exposure. Pregnant mice exposed during days 7–14 gestation to 31.25, 62.5, 125, 250, 500 or 1000 mg 2–ME/kg body weight showed significantly decreased WBCs at 1000 mg/kg (5–026). Male mice exposed at 12.5, 125, 250 500, 1000 or 2000 mg/kg over a five week period also exhibited significant decreases in WBC at 500 mg/kg and above (Ex. 4–135). Nagano et al. also exposed male mice to 2–MEA, resulting in a significant decrease in WBC at 1000 mg/kg. The authors noted that when expressed in equimolar doses, the dose-effect levels are similar for 2–ME and 2–MEA. No other studies have investigated the hematological effects of 2–MEA.

b. *2–EE*. Barbee et al. (Ex. 5–084) exposed male and female, rats and rabbits, to 0, 25, 100 or 400 ppm 2–EE, 6 hours/day for 5 days/week for 13 weeks. Adverse blood effects were only observed among male and female rabbits exposed at 400 ppm. These rabbits exhibited a significant decrease in HGB, hematocrit and RBC.

In their teratology studies Doe et al. (Ex. 5–071) exposed pregnant rats to 0, 10, 50 or 250 ppm 2–EE, 6 hours/day on days 6–15 gestation and rabbits to 0, 10, 50 or 175 ppm 2–EE, 6 hours/day on days 6–18 gestation. Rats exposed to 250 ppm exhibited a decrease in HGB, hematocrit and RBC. It is not stated clearly as to whether or not these effects were statistically significant. No treatment related effects were observed at 50 or 10 ppm. No adverse blood effects were observed at any of the test doses for rabbits.

Nagano et al. (Ex. 4–135) exposed male mice to 500, 1000, 2000 or 4000 mg 2–EE/kg body weight 5 days/week for 5 weeks. Significant decreases in WBC were observed in the 2000 and 4000 mg/kg exposure groups.

c. *2–EEA*. Tyl et al. (Ex. 5–124) exposed pregnant rats and rabbits to 0, 50, 100, 200 or 300 ppm 2–EEA 6 hours/day on 6–15 and days 6–18 gestation, respectively. Rabbits showed significant decreases in platelet counts at 200 and 300 ppm. Rats also had decreased platelet counts at 200 and 300 ppm. In addition rats exhibited a significant increase in WBC at 200 and 300 ppm and a decrease in RBC at 100, 200, and 300 ppm exposure. Barbee et al. (Ex. 5–071) also exposed pregnant rabbits to 2–EEA at doses of 0, 25, 100, or 400 ppm. The only statistically significant effect observed was a decrease in HGB at 400 ppm. Oral studies by Nagano (Ex. 4–135) exposed mice to 500, 1000, 2000, or 4000 mg 2–EEA/kg body weight. The only significant effect in this study was a decrease in packed cell volume in mice exposed at 4000 mg/kg.

F. Adverse Health Effects in Humans

Workers exposed to 2–ME and 2–EE have exhibited adverse effects on the hematologic and male reproductive systems. Blood effects among exposed workers include bone marrow injury, reduced red and white blood cell counts and anemia. The major reproductive effect observed among exposed workers is reduced sperm count. OSHA is unaware of any female reproductive or developmental toxicity data among workers exposed to glycol ethers. OSHA believes however that the lack of data in this area is due in major part, to the difficulty in structuring and conducting analyses to detect these types of adverse effects. Thus, although the human data are limited, there is positive evidence among exposed workers and this evidence supports the strong body of evidence observed in experimental animals.

1. 2–ME

Ohi and Wegman (Ex. 4–139) reported on two workers in a textile printing plant who developed clinical manifestations of encephalopathy (brain disease) after the acetone that was usually used in a hand cleaning operation had been substituted with 2–ME. Protective gloves were not worn. In addition to the neurological symptoms of encephalopathy, both workers had evidence of bone marrow injury. One had pancytopenia (reduction in the numbers of all of the formed elements of the blood). Air samples collected during the washing operation averaged 8 ppm. Although no estimate was made of the magnitude of skin absorption, exposure was characterized as being "predominantly dermal." Thus dermal exposure may have played a significant part in the observed effects. The authors noted that blood counts returned to normal after removal from exposure indicating that blood effects may be reversible.

Cohen (Ex. 5–049) presented a case report of subjective central nervous system complaints and asymptomatic hematopoietic effects following inhalation and skin exposure to 2–ME in a microfilm coating and mixing operator. The worker's job in this case report entailed mixing chemicals, often while standing directly over open 1500 gallon kettles which contained 33% 2–ME. 2–ME was also used in the manual cleaning of the kettles, usually done without gloves. Breathing zone exposures revealed time-weighted average 2–ME levels of 18.2 ppm to 57.8 ppm (average being approximately 35 ppm). Small quantities of methylethyl ketone (MEK) (1–5 ppm) were present. During a periodic examination less than a year after starting his job, it was found that the blood indices of this 32-year-old worker, which had previously been normal, dropped. His white blood cell (WBC) count, red blood cell (RBC) count, hemoglobin, hematocrit, and platlets were all found to have fallen to abnormally low levels. The worker also noted an increase in sleep time, increase in weight, decrease in appetite, increased fatigue, and feelings of apathy. When the worker was removed from skin and inhalation exposure to 2–ME, all hematologic parameters returned to normal.

Cook et al. (Ex. 5–002) conducted a cross-sectional study among male manufacturing and processing employees, 40 with potential exposure to 2–ME, to determine if anemia, leukopenia (reduction in number of white blood cells), or sterility were present and, if so, if they were more prevalent among the exposed workers. Manufacturing of 2–ME was by a continuous enclosed process. In a separate packaging and distribution facility, 2–ME was loaded into drums, tank cars, or rail cars. Drums were filled automatically, but there was manual capping. TWA air samples of 2–ME collected in the packaging and distribution facility in 1980 indicated personal exposures of 5 to 9 ppm 2–ME and area concentrations of 4 to 20 ppm. However, because of the potential for skin contact and absorption, continued use of protective gloves was recommended to avoid skin contact during sampling and maintenance. Workers exposed to 2–ME were also potentially exposed to 2–EE, polyols and polyoxypropylene glycols, brake fluids, butylene oxide, and polyglycols. Complete blood counts (CBC), hormone levels [i.e., Luteinizing hormone (LH), Follicle Stimulating hormone (FSH), testosterone], length and width of testis, and sperm counts were evaluated for frequencies of abnormal outcomes and percentage differences of grouped means in workers exposed to 2–ME and in the unexposed workers. Hematologic variables in 40 exposed and 25 controls were compared to determine prevalence of anemia and/or leukopenia. Clinical fertility indices for a subgroup of 15 (6

exposed, 9 control) were supplemented by medical history and responses to the question: "Looking back, do you feel you have had any trouble having children?"

Study results indicated little difference between exposed and controls. The only difference between means that approached statistical significance was testicular width (p=.08); however, testicular length was also diminished among the total exposed (p=.19). The authors acknowledged a variety of chemical exposures for both study groups. They also suggested the likelihood of interobserver bias, given that one physician consistently measured lower values and examined appreciably more exposed individuals than controls.

2. 2–EE

In 1984 NIOSH conducted a Health Hazard Evaluation of possible reproductive effects among male workers exposed to 2–EE at Precision Castparts Corporation (Ex. 5–003). 2–EE was used as a binder in the preparation of ceramic shells used to cast precision metal parts from wax molds. Approximately 80 male workers engaged in this process were potentially exposed to 2–EE. Full shift breathing zone airborne exposures ranged from non-detectable to 23.8 ppm. Because of the potential for skin exposure to 2–EE, urine measurements of ethoxyacetic acid (EAA), a metabolite of 2–EE, were also determined. Urine excretion of EAA ranged from non-detectable to 163 ug/g creatinine. Blood samples analyzed for 2–EE concentrations did not reveal any detectable levels of 2–EE.

In this study NIOSH also conducted a cross-sectional evaluation of semen quality (sperm concentration, pH, volume, viability, motility, velocity and morphology) among 37 men exposed to 2–EE in this plant. The evaluation included a comparison group of 38 unexposed men from elsewhere in the plant. A questionnaire to determine personal habits, medical and work histories and a brief examination of the genital tract, including measurements of testicular size, were also administered.

The average sperm count per ejaculate among the 2–EE exposed workers was significantly lower than that of the unexposed group (113 v. 154 million sperm per ejaculate; p<0.05). For exposed workers, this difference was statistically highly significant (p<0.001). The two groups did not differ significantly with respect to other semen characteristics or testicular size. Consideration of the other factors (e.g., abstinence, sample age, subject's age, tobacco, alcohol, and caffeine use, history of urogenital disorders, fever, and other illness) which affect semen quality did not alter these results. However the authors noted that the average sperm concentrations of both groups were lower than the average for other occupational populations studied by NIOSH. Historical control sperm concentration is 70 million/ml. In the present study the mean sperm concentration of the unexposed group was 60 million/ml and that of the exposed group was 48 million/ml.

NIOSH concluded that there was a possible effect of 2–EE on sperm count among these workers, and recommended limiting exposure to 2–EE to the fullest extent feasible, given the known testicular toxicity in animals.

In the first of three related papers Sparer, Welch, McManus and Cullen (Ex. 5–103) characterized exposure to ethylene glycol ethers in a group of shipyard painters. Painters employed at the shipyard worked in four crews: shop crew, interior crew, tank crew, and exterior crew. The shop crew worked in the paint shop where they formulated and mixed paints and issued respirators. The majority of men in the shop crew had worked on other crews in the past. Interior, exterior, and tank crews worked on the boats. Assignment of a painter to a crew depended on the stage of completion of the boat. Painters may have been assigned to one crew and worked overtime on another. In any given month a painter may have worked on the interior, exterior, and tank crews.

Much of the painting performed by the interior crews was by brush application. Tanks were primarily spray painted, and air-supplied respirators were always worn during this operation. Half-face filter respirators with organic vapor cartridges and paint filters were worn by painters whenever they sprayed on interior jobs and were available, but seemed to be optional, for those doing brush painting.

One hundred and two air samples from thirty-six painters were analyzed for 2–EE and 2–ME. 2–EE was detected in 90 samples, 2–ME in 81. For 2–ME the mean was 0.8 ± 1.0 ppm; median 0.44 ppm and the range 0–5.6 ppm. The mean value for 2–EE was 2.6 ± 4.2 ppm; the median 1.2; the range 0–21.5 ppm. The mean air exposure of the interior crew was 2.6 ± 4.2 ppm for 2–EE and 0.8 ± 1.0 ppm for 2–ME. Visible paint on the painters indicated that 60% of the men sampled had skin contact. Painters who were using paints without ethylene glycol ethers, or not painting at all, still had exposure to these solvents as demonstrated by air sampling.

Sparer and Welch et al. stated that although these sampling observations do serve to help characterize the exposure of these painters to ethylene glycol ethers, several factors suggest that these measurements may underestimate exposure. A NIOSH investigation of 2–EE exposures reported variable results in recovering analyte from field samples that are shipped to an analytical laboratory and stored for extended periods. Recovery was found to be between 60% and 100% (Ex. 5–003). The painters also reported that, perhaps because of the sampling in progress, work on the study days was much slower than usual. This may have resulted in measured values lower than usual levels.

Welch et al. (Ex. 5–104) conducted semen, hematologic, and fertility studies for the entire study population, 94 painters and 55 nonexposed controls. The workers supplied information on demographic characteristics, medical conditions, personal habits, and reproductive history and underwent a physical examination. The questionnaire elicited basic demographic information and information about medical conditions and personal habits that have been reported to effect semen parameters, including smoking, alcohol consumption, caffeine consumption, medications, radiotherapy or chemotherapy, recent febrile illness, past history of mumps, and genitourinary conditions. Each participant was asked about his work history and hobbies. He was asked if he and his wife ever had difficulty conceiving a child, whether he ever saw a physician for this problem, and the physician's diagnosis.

A sample of blood was obtained for a complete blood count (CBC), and for determination for serum follicular stimulating hormone (FSH), luteinizing hormone (LH) and testosterone. Urine samples were obtained from each painter at the beginning and end of each sampling period. These samples were frozen and transported to the NIOSH laboratories for analysis for the alkoxyacetic acid metabolites of 2–ME and 2–EE.

Semen samples were collected from 73 of the painters and 40 controls to determine whether 2–EE and 2–ME affects the reproductive potential of exposed men. Semen samples were analyzed for pH, volume, turbidity, liquidity, viability, sperm density and count per ejaculate, motility, morphology and morphometry.

The proportion of men with a sperm density <20 million/cc was higher in the exposed group than in the unexposed group, 13.5% (10 painters) vs. 5% (2 controls) (p=0.12). The authors noted

that the proportion found in the controls, 5%, was in agreement with population surveys of sperm density. When oligospermia (deficiency in number of sperm) is defined as a sperm count per ejaculate ≤100 million, 33% (24 painters) and 20% (18 controls) were oligospermic (p=0.20). The rate of oligospermia was analyzed separately for smokers and non-smokers. Among the non-smokers, the exposed group had a higher rate of oligospermia (p=0.05). When smoking was controlled, the odds ratio calculated for a decreased count per ejaculate among the painters was 1.85, with a 95% confidence interval of 0.6–5.6.

Because of the regular rotation of painters from one job to another at the shipyard, the painters could not be classified into dose groups. Because of the cyclical nature of spermatogenesis the authors stated that exposure from two to six months prior to semen analysis was likely to have produced an effect at the time of the study, and it was not possible to determine each man's job and exposure at that time. Therefore, the researchers assumed that all the painters had the same exposure.

Painters were also exposed to two other substances that have been reported in the past to affect semen quality, lead and epichlorohydrin. Lead is known to cause a depression of sperm count. The mean lead levels of the 45 men who had been monitored for lead were mostly below 20 ug/deciliter(dl), and the highest single level in any individual was 40 ug/dl. The authors stated that this level of lead exposure has not been documented to cause a depressed count. Epichlorohydrin was not detected in air sampling during the study.

The authors thus concluded that exposure to the ethylene glycol ethers 2–EE and 2–ME lowered sperm count in this group of painters. The authors pointed out that this finding is consistent with the effect seen in animal studies. Studies in several species show that these glycol ethers cause loss of germinal epithelum and testicular atrophy. Cellular studies show that this effect occurs by inhibition of cell division in the early pachytene stage of spermatogenesis, an effect that would be expected to result in a decreased count rather than an effect on motility or morphology.

Welch and Cullen (Ex. 5–102) undertook a cross-sectional clinical appraisal of a sample of painters and unexposd workers to evaluate the relationship between measurements of peripheral blood of the workers and ethylene glycol ether exposure. The study of hematologic function included: a complete blood count, a manual differential count of 200 cells, and a manual platelet count. In addition, each subject's past medical record from the employer's medical department was requested, including routine blood counts and whole blood levels. Complete records were obtained for two-thirds of the subjects.

The authors reported that the only other compounds known to be toxic to bone marrow or circulating blood cells that painters at the shipyard were exposed to, in addition to ethylene glycol ethers, were lead and benzene. Lead exposure was limited to abrasive blasting operations; the highest lead level detected during brushing or cleaning operations was 10 ug/m^3. Sampled levels during blasting were as high as 11 mg/m^3. Painters engaged in blasting use air-supplied respirators and their blood lead was routinely monitored. Forty-five of 94 painters were categorized by the employer as "lead exposed" and were participating in the routine blood testing; only nine of the forty-five men had a mean lead level greater than 15 ug/dl, and only two had a mean greater than 20 ug/dl, with the highest at 30 ug/dl. The highest single value was 40 ug/dl.

Paints or cleaning solutions containing more than 1% benzene have not been used in the shipyard since 1977. Ten air samples for benzene were obtained by NIOSH during the 1978 survey; levels of 0.08 to 0.53 mg/m^3 were detectable in eight samples. None of the bulk samples of paints or cleaning solutions in the current industrial hygiene survey revealed any benzene. Mean hemoglobin levels did not differ between the painters (15.43 g/dl ± 1.09 S.D.) and controls (15.67 g/dl ± 0.84); p=0.14 in a two-tailed test. Additionally, there were no statistically significant correlations between hemoglobin and cumulative exposure measured as years painting at the shipyard.

The hemoglobin data were rank ordered and analyzed by the Wilcoxon rank order test. There was no significant difference in rank for the entire group. However, when only those study subjects in the lowest quartile for hemoglobin were included in the analysis, the majority of low values were in painters (p=0.028).

Using an a priori standard for anemia in working age adult males of less than 14 grams hemoglobin/dl blood, nine of the 147 subjects with adequately coded data were below this cutoff; all nine were painters. The past medical records of the shipyard for the anemic painters were reviewed; complete medical records were available on 7 of the 9. Normal hemoglobins were noted on hire in four of the seven anemic men with available records. In a fifth, the initial hemoglobin of 13.8 g/dl had dropped steadily to 12 at the time of the study. For the two men for whom there were no preemployment blood counts, their hemoglobins were compared to those of the respondents of the National Health and Nutrition Examination Survey of the same age, sex, and race, and found to be less than the 10th percentile. In the remaining two, hemoglobins were 13.1 and 13.7 g/dl on hire, comparable to those found during the study. After eliminating these two, whose values did not change since first employed, the rate of anemia is significantly different between painters and controls (p=0.04). Two of the anemic painters also had an abnormal semen analysis; one was oligospermic, and one was azoospermic (lack of sperm).

Total polymorphonuclear leukocyte (PMN) count was calculated by multiplying the total white count by the percentage PMNs in the differential count. The mean values did not differ significantly between the two groups (painters, 4,602 cell/ul ± 2,041 S.D.; controls,4,650 ± 1,771). A lower limit of 1,800 cells/ul was used to define "normal" and "abnormal" groups of painters and controls. The lowest total counts were found among painters; five, or 3.4% of the painters had values below 1,800 cell/ul, whereas none of the controls had such low levels (p=0.07).

The authors concluded that the differences in hematologic values seen between the groups of painters and the unexposed controls is significant and that preexisting host factors or rates of participation are not able to explain their results. Welch and Cullen concluded that an analysis of other exposures demonstrates that the difference is attributable to ethylene glycol ethers. They added that the absence of a significant effect on the group as a whole and the inability to detect a dose-response pattern, make strong conclusions unwarranted. The authors called for further research on hematologic effects of these compounds in human populations.

In summary, although limited in part by confounding exposures to other solvents, data among workers exposed to 2–ME and 2–EE have exhibited anemia, reduced white and red blood cell counts, bone marrow injury and reduced sperm counts. In some cases these effects were observed at levels which were reportedly below those of the current permissible exposure limits for 2–ME and 2–EE. These findings support the strong body of experimental animal evidence, which show, in

several species, that 2–ME and 2–EE induce adverse hematologic, reproductive and developmental effects.

G. Mutagenicity

Studies in general indicate a lack of mutagenic potential for 2–ME and 2–EE. Mutagenicity is the ability to induce genetic mutation, i.e., a change in the genetic material. Mutations may give rise to developmental effects in cases where the genetic material of the egg or the sperm has been changed such as to induce abnormal development in the fetus. (Mutations may also give rise to cancer. However, there are substances which may be carcinogenic which are not mutagenic. The carcinogenicity of these glycol ethers has not been tested.)

2–ME and 2–EE have been tested in various tests including Ames tests, unscheduled DNA synthesis (UDS) assays in human embryo fibroblasts, sister chromatid exchange (SCE) tests in hamster ovary cells, cytogenic analyses in rat bone marrow cells, dominant lethal tests in rats, sperm abnormality tests in mice and sex linked recessive (SLR) tests in fruit flies. (Exs. 5–022, 5–056 and 5–076).

Neither 2–ME nor 2–EE induced effects in either the Ames test or UDS assays. 2–EE did induce chromosomal abnormalities in SCE tests. The authors stated that the positive findings in 2–EE are in contrast to the general negative findings in most mutagenic assays. Thus the authors concluded that it may be premature to classify these substances as mutagenic. In the SLR assays 2–EE was found to be negative while inconsistent results were observed for 2–ME. Positive results were observed for 2–ME in the sperm abnormality and dominant lethal tests. For example, 2–ME induced abnormal sperm head morphology and a reduction in male rat fertility. While the dominant lethal test showed a decrease in male fertility, the authors raised the possibility that the reduction in fertility could also be attributed to reduced sperm number rather than a dominant mutation.

Thus, the majority of the available data indicates that 2–ME and 2–EE lack mutagenic potential. However, the presence of positive findings raised the possibility that these substances may have some weak mutagenic potential. No mutagenicity testing has been conducted with 2–MEA or 2–EEA, but the metabolic data discussed earlier suggest that all four compounds are metabolized by similar pathways and are thus likely to induce similar effects. Thus the results observed for 2–ME and 2–EE are predictive of mutagenic potential in their respective acetates.

H. Conclusions

Health effects data from experimental animal studies clearly and consistently show that 2–ME, 2–EE and their acetates produce dose related adverse hematologic, reproductive and developmental effects. These effects include testicular damage, reduced fertility, maternal toxicity, early embryonic death, external, skeletal and visceral malformations, delayed development, and adverse effects on the blood. Evidence also indicates that both inhalation and dermal exposures are significant routes of exposure for glycol ethers and the induction of adverse effects. In addition, persons occupationally exposed to 2–ME and 2–EE through inhalation and dermal exposures have exhibited adverse reproductive and hematologic effects. Although not as extensive, in major part due to methodological limitations, the human data are nevertheless highly consistent with and supportive of the strong body of data in experimental animals showing adverse hematologic, reproductive and developmental effects.

I. Other Glycol Ethers

Past research on the health effects of glycol ether compounds has primarily been concentrated on 2–ME and 2–EE as these two compounds and their acetates have represented a major percentage of the industrial use of glycol ethers.

Although less extensive there is also research on other glycol ether compounds. Much of the concentration in this area has been on substitutes for 2–ME and 2–EE such as 2-Butoxyethanol and the propylene glycol ethers (e.g., propylene glycol monomethyl ether and its acetate).

1. 2-Butoxyethanol (2–BE)

In a series of experiments Carpenter et al. (Ex. 5–146) exposed various animal species (e.g., rats, guinea pigs and mice) to 2–BE by inhalation. Groups of rats and guinea pigs were exposed for 7 hours/day, 5 days/week for 30 days at doses of 54, 107, 203, 314 or 432 ppm (rats) and doses of 54, 107, 203 376, or 494 ppm (guinea pigs). Significant increases in osmotic fragility in red blood cells was observed in rats at doses of 107 ppm 2–BE and higher. Osmotic fragility was also observed at 54 ppm when doses were administered daily for 30 days. No statistically significant evidence of osmotic fragility was observed among the guinea pigs at any of the doses tested. Mice were exposed 7 hours/day for 30, 60 or 90 days to 100, 200 or 400 ppm. No controls were included. Osmotic fragility was observed at all doses tested.

Hematologic analyses were also conducted by Tyl et al. (Ex. 4–152) on pregnant rats and rabbits exposed to 2–BE by inhalation. Rabbits and rats were exposed to 0, 25, 50, 100 or 200 ppm 2–BE on days 6–18 (rabbits) and days 6–15 (rats) of gestation. Red blood cell counts, hemoglobin and hematocrit were analyzed in blood samples from both pregnant rats and rabbits. In rats osmotic fragility of red blood cells were not detected at any of the tested doses. However, significant reductions in red blood cell count and mean corpuscular hemoglobin concentration were observed at both 200 and 100 ppm. Mean cell volume and hemoglobin were significantly increased at 200 and 100 ppm. The only significantly treatment related effects observed among rabbits were increases in hemoglobin content and hematocrit at 100 ppm. However, these same blood effects were not observed at 200 ppm.

Dodd et al. (Ex. 5–050) performed acute, 9-day and 13-week inhalation studies in rats to investigate the toxicity of 2–BE. In the acute study rats were exposed for 4 hours to target concentrations of 200, 500 and 850 ppm 2–BE. The acute 4 hour LC_{50} was 486 ppm for males and 450 ppm for females. Rats exposed to 500 and 850 ppm exhibited loss of coordination. Post mortem examinations of these animals revealed red stained urine and kidney damage. Rats exposed to 200 ppm appeared normal. In the 9-day study rats were exposed 6 hours/day to 0, 25, 100 and 250 ppm 2–BE. At 250 ppm rats exhibited significant decreases in red blood cell count and hemoglobin concentration. Significant effects in the blood were also observed among rats in the 100 ppm exposure group. However, the authors stated that the effects were less profound. No statistically significant adverse hematological effects were observed among the rats exposed to 25 ppm. In the 13-week study, rats were exposed to 0, 5, 25 or 75 ppm 2–BE, 6 hours/day, 5 days a week for 13 weeks. At 75 ppm female rats exhibited significant decreases in red blood cell count and hemoglobin concentration and increases in mean corpuscular hemaglobin after 6 weeks of exposure. However, by the end of the study these decreases had either lessened or returned to controls levels. Male rats exposed at 75 ppm showed a significant decrease only in red blood cell count. No other dose related effects were observed among male or female rats. In particular there were no alterations in testes weight among males exposed to 2–BE, nor were any lesions observed

which would have been indicative of a testicular effect.

A similar lack of testicular effect after exposure to 2–BE was noted by Nagano et al. (Ex. 4–135). In this study mice were orally exposed to 500, 1000, or 2000 mg/kg body weight of 2–BE, 5 days/week for 5 weeks. Animals exposed at 2000 mg/kg died. Decreases in red blood cell count were observed among both the 1000 and 500 mg/kg exposure groups. However, males at 100 and 500 mg/kg 2–BE did not exhibit any statistically changes in testicular weight. This observation was in contrast to results from this same study which showed marked testicular degeneration after exposure to 2–ME, 2–EE and their acetates.

Doe (Ex. 4–112) studied the testicular effects of single high dose exposures to 2–BE, in addition to examining the effects of 2–ME and 2–EE. Rats were exposed for 3 hours to single high doses of 2–BE (800 ppm), 2–ME (7500 ppm), or 2–EE (3500 ppm) and then were followed for 14 days. 2–ME and 2–EE significantly induced testicular atrophy, however, no significant reduction in testes weight were seen among the 2–BE exposed rats.

Similar comparative analyses were performed by Foster et al. (Ex. 5–052). However, in this study the metabolites of 2–BE, 2–ME and 2–EE were administered rather than the parent glycol ethers. Male rats were exposed by gavage to single oral doses of butoxyacetic acid (0, 174, 434 or 868 mg/kg), methoxyacetic acid (0, 118, 296, or 595 mg/kg) or ethoxyacetic acid, (0, 137, 342, or 684 mg/kg). No statistically significant evidence of testicular toxicity was observed at any of the test doses for butoxyacetic acid whereas both methoxy- and ethoxyacetic acid were found to significantly decrease testicular weight (at all doses for 2–ME and at high doses only for 2–EE). As a part of this same study *in vitro* testicular cell cultures were exposed to the above metabolites to investigate the effects on testicular germ cells. Adverse effects in spermatocytes were observed after administration of methoxy- and ethoxyacetic acids. For example, MAA and EAA produced an enhancement of germ cell loss from Sertoli cell cultures. In contrast no specific effects such as those that were observed after administration of butoxyacetic acid.

The developmental effects of 2–BE were studied by Tyl et al. (Ex. 4–152). Pregnant rats and rabbits were exposed to either 0, 25, 50, 100 or 200 ppm 2–BE for 6 hours/day on days 6–15 (rats) or days 6–18 (rabbits) of gestation. Signs of maternal toxicity were observed in rats at 100 and 200 ppm (e.g., significant reductions in body weight, food consumption and absolute and relative organ weights). A significant increase in the number of resorbed litters, a significant decrease in the number of viable implantation per litter and a significant reduction in skeletal ossification were also observed after exposure to 200 ppm 2–BE. No significant increases in the incidence of malformations were observed at any doses among the rats. In rabbits, increases in resorptions and reduced body weight gain were observed at 200 ppm however these effects were not statistically significant. Significant reductions in the number of viable implants were observed at 200 ppm. No evidence of statistically significantly increased incidences of malformations were found among any of the exposed rabbits. The authors concluded that 2–BE induced maternal and fetotoxic effects but not teratogenic effects.

No significant increases in maternal or developmental effects of 2–BE were observed by Nelson et al. (Ex. 5–091). In this study pregnant rats were exposed to 0, 150, or 200 ppm 2–BE for 7 hours/day on days 7–15 gestation. These levels were chosen as earlier findings reported death at doses from 250 to 500 ppm 2–BE. The only significant adverse effect observed was "slight" hematuria among the maternal animals after the first day of exposure. Otherwise, no other significant maternal or developmental adverse effects were observed. Effects examined included resorptions, fetal weights and incidence of malformations. These findings are in contrast to results of this same study in which 2–ME and 2–EE were shown to induce adverse maternal and developmental effects.

Dermal application of 2–BE has also shown a similar lack of maternal or developmental effect. Hardin et al. (Ex. 5–073) exposed pregnant rats by dermal application to 0.35 mL 2–BE, four times daily on days 9–13 of gestation. Deaths occurred through the third and seventh days of exposure. Only one of the 11 rats treated survived. Therefore, tests were repeated at 0.12 mL, four times daily. No significant adverse maternal or developmental effects were observed at this exposure dose.

In the recent final Air Contaminants standard (54 FR 2332) OSHA revised the Permissible Exposure Limit (PEL) for 2–BE from 50 ppm to 25 ppm. OSHA concluded that,

> [T]he former PEL of 50 ppm was insufficiently protective against the risk of 2-butoxyethanol's irritant, hematological, and other potential systemic effects, which constitute material health impairments. The limit of 25 ppm included in the final rule will reduce this significant risk to a level below that at which these toxic effects have been observed in animals and humans. This lower limit will also prevent the discomfort experienced by workers at exposure levels of 40 ppm. (Air Contaminants Final Rule, 54 FR 2554)

In 1990 NIOSH published a Criteria Document for 2–BE and its acetate, 2–BEA (Ex. 5–145). NIOSH reported that data from animals indicate that 2–BE and 2–BEA do not cause adverse reproductive or development effects. However they report that the animal evidence shows that these substances do induce marked adverse effects on the blood. Based on the adverse blood effects observed in animals, NIOSH recommended occupational exposure limits of 5 ppm for both 2–BE and 2–BEA.

2. Propylene Glycol Ethers

The production of propylene glycol ethers is analogous to that of ethylene glycol ethers. Ethylene glycol ethers are made by reacting ethylene oxide and the appropriate alcohol. Propylene glycol ethers are produced by reacting propylene oxide with the appropriate alcohol. As such the propylene and ethylene glycol ethers are structurally analogous. For example, ethylene glycol monomethyl ether (2–ME) is structurally very similar to propylene glycol monomethyl ether. However despite some structural similarities, differences in toxicities have been observed between the two general types of compounds.

For example, in a series of experimental studies Hanley et al. (Exs. 5–068 and 4–120) compared the developmental effects of 2–ME and propylene glycol monomethyl ether (2–PGME). In studies on 2–ME (Ex. 4–120) rats and rabbits were exposed to 0, 3, 10, or 50 ppm 2–ME, 6 hours/day on days 6–15 and days 6–18 of gestation respectively. In rabbits, exposure at 50 ppm 2–ME resulted in a significant decrease in maternal body weight gain, a significant increase in resorption rates and significant increases in major malformations. Increased resorption rates were also observed at 10 ppm compared to concurrent controls, but because the resorption rates were not statistically different from historical control values, the authors did not consider the effects to be dose related. Rats did not show any signs of maternal toxicity after exposure to 50 ppm. However fetuses from this exposure group exhibited a significant increase in the incidence in lumbar spurs and delayed ossification. Neither rats nor rabbits had any other significant adverse effects at 10 or 3 ppm. In comparison,

Hanley et al. (Ex. 5–068) exposed rats and rabbits to 0, 500, 1500 or 300 ppm 2–PGME to similar periods of gestation for 6 hours/day. At 3000 ppm both rats and rabbits exhibited maternal effects including central nervous system depression and a significant decrease in body weight gain. No significant maternal effects were observed at 1500 or 500 ppm for either species. Neither rats nor rabbits exhibited any significant increase in resorption rates or major malformations at any of the dose levels tested. It was noted by the authors that a significant increase in malformations among rat fetuses at 3000 ppm was observed compared to concurrent controls. However this increase was similar to historical control values and thus was not considered to be dose related. The only significant effect observed, delayed sternebral ossification, was observed at 3000 ppm in rats. This result was interpreted by the authors to be an indication of slight fetotoxicity.

Miller et al. (Ex. 5–088) also compared the toxicities of 2–ME and 2–PGME in rats and rabbits. Rats and rabbits were exposed to 0, 30, 100 or 300 ppm 2–ME or 0, 300, 1000 or 5000 ppm 2–PGME, 6 hours/day for 13 weeks. Exposure to 300 ppm 2–ME induced testicular degeneration, decreased sperm count, decreased white blood cell counts and decreased hemoglobin concentrations. No significant effects were observed among the 100 or 30 ppm exposure groups. In contrast, no significant effects on testes weight or blood were observed among rats or rabbits exposed to 2–PGME at any dose tested. The authors attributed the difference in toxicity to differences in metabolism. The authors noted that 2–ME is a primary alcohol and has been shown to be metabolized by an alcohol dehydrogenase mediated pathway to methoxyacetic acid. In addition methoxyacetic acid is considered to be the active metabolite in the induction of reproductive and developmental toxicity. In contrast, 2–PGME is a secondary alcohol and is metabolized by microsomal enzymes to propylene glycol. The authors concluded that this difference in metabolism is most likely to be responsible for the differing toxicities of 2–ME and 2–PGME.

However Miller et al. (Ex. 5–093) have also noted that there are two isomeric forms of 2–PGME; the alpha isomer (which is a secondary alcohol) and the beta isomer (which is a primary alcohol). Because of their differences in structure the two isomers are metabolized differently. The alpha isomer is metabolized by microsomal enzymes to propylene glycol and the beta isomer is metabolized by the alcohol/aldehyde dehydrogenase pathway to 2-methoxypropionic acid. The beta isomer follows a metabolic pathway similar to that of the ethylene glycol ethers, 2–ME and 2–EE, which are also primary alcohol glycol ethers. Thus it was postulated that the beta isomer may have toxic properties different from its alpha isomer and may possibly be more similar to ethylene glycol ethers. These conclusions are supported by studies by Merkle et al. (Ex. 5–092) on the pure beta isomer of 2–PGME Acetate. In this study pregnant rats were exposed to 0, 110, 550 or 2700 ppm 2–PGME Acetate and pregnant rabbits were exposed to 0, 36, 145 or 550 ppm 2–PGME Acetate. In rats, exposure to 2700 ppm resulted in a significant increase in the number of litters with skeletal anomalies (e.g., dumbbell shaped notches of the thoracic vertebrae). A slight, but significant, decrease in fetal body weight was also noted at 2700 ppm. No significant effects were observed at the lower test doses. Rabbits however showed a more sensitive response. At 550 ppm, all fetuses exhibited severe malformations (e.g., heart defects and anomalies of the paw and sternum). No significant increases in malformations were observed at other tested doses. It was concluded from these results that the beta isomer of the 2–PGME Acetate has teratogenic potential. By analogy, the beta isomer of its parent glycol ether, 2–PGME was also considered to have teratogenic potential.

While the beta isomers of the propylene glycol ethers appear to have teratogenic potential Miller et al. (Ex. 5–093) also note in their metabolic study that the commercial product of 2–PGME is usually a mixture of the two isomers, with the alpha isomer accounting for up to 95% of the mixture. In its comment on the ANPR, the ARCO Chemical Company, a primary producer of propylene glycol ethers, has also stated that 2–PGME and its acetate routinely contain less than 2% of the beta isomer (Ex. 7–19). These types of commercial products were used by Miller et al. (Ex. 5–088) and Hanley et al. (Ex. 5–068) in their reproductive and developmental studies and were shown to have a low degree of biological activity in comparison to ethylene glycol ethers.

3. Ethylene Glycol Monopropyl Ether (EGPE)

Katz et al. (Ex. 5–085) conducted a series of acute and subchronic toxicity tests on EGPE and its acetate EGPEA in rats. In single dose oral studies rats were exposed to 1090, 2180, 4360, 8720 mg/kg (EGPE & EGPEA) or 17,470 mg/kg (EGPEA only). The LD_{50} of EGPE and EGPEA were observed to be 3089 and 9456 mg/kg, respectively. Prior to death animals exhibited weakness, anorexia and hemoglobinuria. In single inhalation dose studies rats were exposed to target concentrations of 0, 250, 100 or 200 ppm EGPE and 0, 250, 500 or 100 pp, EGPEA. No lethality was observed at any dose, therefore the LC_{50} was concluded to be greater than 2132 ppm for EGPE and greater than 934 ppm for EGPEA. In six week oral studies male rats were exposed to 0, 195, 390, 780 or 1560 mg/kg body weight EGPE or 0, 1097, 2193, or 4386 mg/kg EGPEA. Adverse blood effects (e.g., significant decreases in hemoglobin concentration and significant increases in platelet counts and nucleated red blood cells) were observed for both compounds at all dose levels. However, only rats exposed to EGPEA at 4386 mg/kg exhibited significant decreases in testicular weight. Pathological examinations revealed atrophy of the seminiferous tubules and degenerated sperm. In the two week inhalation studies both male and female rats were exposed for 6 hours/day to either 0, 100, 200, 400, 800 ppm EGPE or 0, 100, 200, 400 or 800 ppm EGPEA. Slight, but significant changes in red blood cells (e.g., decreased count, and increased corpuscular volume) were observed at 800 and 400 ppm for both compounds. Hemoglobinuria was observed in males and females at 800 ppm EGPE and males only at 400 ppm. Both males (4 out of 5) and females (5 out of 5) exhibited hemoglobinuria after exposure to 400 and 200 ppm EGPEA. A significant increase in spleen weights were observed at 800 and 400 ppm for both compounds. No significant changes in testicular weight were observed for either compound. Based on these results the authors concluded that the NOELs in this study were 200 ppm for EGPE and 100 EGPEA.

Krasavage and Katz (Ex. 5–070) studied the developmental toxicity of EGPEA. In this study pregnant rats were exposed to 100, 200, 400 or 800 ppm EGPEA, 6 hours/day on days 6–15 gestation. Exposure to 800 and 400 ppm resulted in decreases in mean maternal body weight, feed intake, and red blood cell counts. Exposure at 800 ppm also resulted in a significant increase in the incidence in resorptions and a significant reduction in mean fetal body weight. No significant increases in the incidence of major malformations were observed among fetuses exposed up to 800 ppm. The authors stated that significant increases in the incidence of minor skeletal effects (e.g., wavy,

knobby, fused and partially ossified ribs and decreased ossification of the skull) were observed at 800 and 400 ppm. A significant increase in rudimentary ribs was observed in the 200, 400 and 800 ppm exposure groups. The authors concluded that adverse fetal effects occur after exposure to EGPEA. However they stated that these effects occurred only after doses which were overtly toxic to the maternal animal (i.e., 800 and 400 ppm).

4. Di-Ethylene Glycol Monomethyl Ether (DEGME)

In inhalation studies by Miller et al. (Ex. 5–058) male and female rats were exposed to 0, 30, 100 or 216 ppm DEGME, 6 hours/day, five days/week for 13 weeks. No dose related significant effects were observed among the male or female animals for any of the doses tested. Based on the lack of effects the authors concluded that DEGME is unlikely to present the same degree of hazard as its structural homolog 2–ME.

The teratogenic potential of DEGME was examined by Scortichini et al. (Ex. 5–060). In this study pregnant rabbits were exposed by dermal application to 0, 50, 250 or 750 mg/kg day of DEGME on days 6–18 gestation. Rabbits exposed at 750 mg/kg exhibited a significant decrease in maternal weight gain and red blood cell counts. No statistically significant maternal effects were observed at 250 or 50 mg/kg/day. The authors noted an increase in resorptions at 750 mg/kg/day, although this effect was not statistically significantly different from controls. In addition no statistically significant increases in major malformations were observed at any of the doses tested. A significant increase in minor skeletal defects such as forelimb flexure, fused ribs, delayed ossification, forked ribs and cervical spurs were observed among litters from rabbits exposed to 250 and 750 mg/kg DEGME. The authors considered these to be significant signs of fetotoxicity rather than teratogenicity and suggested that these types of fetal defects might be associated with maternal toxicity.

5. Ethylene Glycol Monophenyl Ether (2-Phenoxyethanol)

Scortichini et al. (Ex. 5–059) have also examined the teratogenic potential of 2-Phenoxyethanol. Pregnant rabbits were dermally exposed to 0, 300, 600 or 1000 mg/kg/day of 2-Phenoxyethanol on days 6–18 gestation. Nine of 25 rabbits died after exposure to 1000 mg/kg/day and 5 of 25 rabbits died after exposure to 600 mg/kg/day. Death was attributed to intravascular hemolysis. The animals surviving in these groups showed no statistically significant treatment related effects. In addition no statistically significant signs of maternal toxicity were observed after exposure to 300 mg/kg/day. Among fetuses examined, there were no statistically significant increases in the incidence of external, visceral or skeletal malformations at 300 or 600 mg/kg/day. (Fetal observations were not available at 1000 mg/kg/day due to the high lethality at 1000 mg/kg. Animals were sacrificed with no further observations. In addition, no other reproductive parameters such as resorptions or fetal body measurements were adversely affected at 600 or 300 mg/kg/day. Based on these results the authors concluded that doses up to 600 mg/kg/day produced no significant signs of developmental toxicity.

6. Conclusions

The available data for other glycol ether compounds suggests that there are differential toxicities between the longer chain glycol ethers and shorter chain glycol ethers such as 2–ME, 2–EE and their acetates. For example, in the case of 2-butoxyethanol, there were observations of adverse hematological effects but no observations of adverse reproductive or developmental effects. Similarly for propylene glycol ethers there was little evidence of any reproductive or developmental toxicity except in the case of the beta isomeric forms of these compounds. There are scattered reports on other ethylene glycol ether compounds showing adverse hematological effects and, in some cases, slight evidence of testicular effects and minor skeletal defects. In some studies the authors have suggested that defects observed in some of the fetuses may be due to maternal toxicity rather than a direct effect on the conceptus. However, as discussed earlier, developmental effects observed at maternally toxic doses do not necessarily imply that the developmental effects are secondary to maternal effects.

In general, the toxicities of these compounds appear less potent than those of shorter chain glycol ethers. The results from toxicity tests on other glycol ethers strongly contrast with the evidence observed after exposures to 2–ME and 2–EE. The evidence on 2–ME and 2–EE clearly and consistently show reduced sperm count, decreased fertility, testicular degeneration, early fetal death, major external, visceral and skeletal malformations, delayed development and functional deficiency. These effects have been observed in several species and through various routes of exposure. The totality and consistency of the evidence on 2–ME, 2–EE and their acetates in experimental animals, clearly indicate that these agents are potential reproductive and developmental toxins in humans. However, OSHA reiterates that past research primarily concentrated on 2–ME, 2–EE and their acetates. The lack of evidence on other glycol ethers may be due, in part, because less research has been conducted on these compounds. Thus, OSHA requests data and analyses on other glycol ethers and their potential reproductive and developmental toxicity.

VI. Preliminary Risk Assessment

A. Introduction

The United States Supreme Court, in the "benzene" decision, *Industrial Union Department, AFL–CIO* v. *American Petroleum Institute*, 448 U.S. 607 (1980), has ruled that the OSH Act requires that, prior to the issuance of a new standard, a determination must be made, based on substantial evidence in the record considered as a whole, that there is a significant risk of health impairment at existing permissible exposure limits and that issuance of a new standard will significantly reduce or eliminate that risk. The Court stated that "before he can promulgate any permanent health or safety standard, the Secretary is required to make a threshold finding that a place of employment is unsafe in the sense that significant risks are present and can be eliminated or lessened by a change in practices." 448 U.S. 642. The Court also stated "that the Act does limit the Secretary's power to require the elimination of significant risks." 448 U.S. 644.

Although the Court in the "cotton dust" case, *American Textile Manufacturers Institute* v. *Donovan*, 452 U.S. 490 (1981), rejected the use of cost-benefit analysis in setting OSHA standards, it reaffirmed its previous position in "benzene" that a risk assessment is not only appropriate, but also required to identify significant health risk to workers and to determine if a proposed standard will achieve a reduction in that risk. Although the Court did not require OSHA to perform a quantitative risk assessment in every case, the Court implied, and OSHA as a matter of policy agrees, that assessments should be put into quantitative terms to the extent possible.

The extent to which a risk assessment may be put in quantitative terms is limited in the case of glycol ethers. This is not because there are no data suitable for assessing the risk. On the contrary, there are a number of well conducted rodent bioassays which clearly demonstrate the adverse health effects

associated with exposure to glycol ethers (see the discussion of health effects above). The problem lies in the fact that there is not a quantitative model for extrapolating the risk of developmental and reproductive effects either from high doses to low doses or across species, that is generally accepted in the scientific community. Therefore, unlike other risk assessments which OSHA has prepared in the past, this risk assessment will be far more qualitative than quantitative and will closely follow the guidelines of the Environmental Protection Agency for assessing the risks of suspect developmental and reproductive toxicants (Ex. 5–153) to determine those levels of occupational exposure to the glycol ethers below which significant risk of adverse health outcomes are unlikely. This approach, which is described in detail in the following sections, is one that has been generally accepted in both the scientific and regulatory communities and is generally accepted as the best methodology for assessing the risks associated with reproductive and developmental toxins.

Risk assessment is a process in which scientific judgments are made concerning the potential for toxicity to occur in humans. Because human data are often not available, the risk assessment process often requires the use of models to extrapolate experimental data to humans. These models may be quantitative or qualitative. Quantitative models generally involve mathematical descriptions of dose-response relationships which allow one to calculate numerical estimates of potential risk for a given exposure. Qualitative models, on the other hand, rely more on narrative descriptions of dose-response relationships to describe the likelihood of an adverse effect for a given exposure. However both approaches are based on scientific judgments and scientifically based assumptions about dose response relationships and the predictive value of experimental data. The scientific and regulatory communities have chosen a preference for quantitative models especially in the case of carcinogens. However the scientific and regulatory communities also consider qualitative models as an acceptable means of extrapolating animal data to humans. The No Observed Effect Level-Uncertainty Factor (NOEL–UF) approach, described herein, is such a qualitative model.

As a matter of policy, OSHA has chosen to use the NOEL–UF approach in describing the risks associated with exposure to glycol ethers. OSHA has chosen to use this qualitative approach because it is the most generally well accepted approach for assessing the risks from reproductive and developmental toxins. OSHA's decision to use the NOEL–UF approach is based on agreement in the scientific community that this approach is the best methodology currently available for assessing reproductive health risks. This approach, in addition to its general acceptance in the scientific community, is also the methodology that has been consistently used by both EPA and FDA to assess reproductive health risks in their rulemaking procedures. As such it represents the best evidence available to OSHA for making its risk determinations. However while this is a policy choice it should be kept in mind that OSHA's decision to use the NOEL-UF approach is a scientifically informed choice that is supported by scientific expertise and judgment. The selection of the NOEL–UF approach, as well as the steps involved in the process (e.g., the selection of the size of uncertainty factors to extrapolate from animals to humans) are choices based on underlying scientific data and assumptions to account for certain basic scientific uncertainties and are not choices borne solely from a public health perspective to provide a safe workplace in the face of scientific uncertainty.

B. Assessing the Risk of Developmental and Reproductive Effects

Most OSHA risk assessments have focused on the risk of cancer from occupational exposure to toxic substances. In the case of carcinogen risk assessment, mathematical models are fit to dose-response data, and the fitted models are used to make predictions of risk at a variety of doses. Although there are a number of mathematical models available to fit to carcinogen dose-response data, within the risk assessment community in general, and the regulatory community in particular, a consensus exists as to which are the "best" models.

In the case of non-carcinogen risk assessment, no such generally accepted mathematical models exist for predicting risks. The traditional approach to assessing the risk of non-cancer effects has been first to make a qualitative determination that a toxic substance poses a risk of inducing an adverse effect and then to determine the level of exposure below which that adverse effect is unlikely to be induced in humans using an uncertainty or safety factor approach.

This approach is relatively simple. It is most often applied to experimental (animal) data, but it can be applied to epidemiological data when such data are available. The first step in this approach is to determine whether an effect occurs in each exposure group at a rate which is statistically significantly elevated over the rate at which the effect occurs in the unexposed or control group. The highest exposure level which does not induce the effect at a statistically significantly elevated rate is called the no observed effect level or NOEL. In its most recent guidelines (Ex. 5–153), the EPA uses the term NOAEL or no observed adverse effect level instead of NOEL, to make clear that effects being considered are of toxicological significance. For purposes of this document, NOEL is synonomous with NOAEL. The lowest exposure level which *does* induce the effect at a statistically significantly elevated rate is called the lowest observed effect level or LOEL. (EPA also refers to this level as the LOAEL or Lowest Observed Adverse Effect Level. Again, for purposes of this document, LOEL and LOAEL are synonomous.) In this approach the NOEL is usually the value of interest, but a substance may induce an effect at a statistically significantly elevated rate at each exposure level under study. In that case, the LOEL becomes the value of interest. Determination of the NOEL and/or the LOEL is the purpose of this first step.

The next step in this approach is to divide the NOEL or, in the absence of a NOEL, the LOEL by an uncertainty factor. Choice of the uncertainty factor will depend, in part, upon whether one uses the NOEL or the LOEL, and this is discussed at greater length below. The value

$$\frac{\text{NOEL}}{\text{Uncertainty Factor}}$$

is termed the "acceptable daily intake" or ADI and is considered to represent the level of exposure at which humans are unlikely to experience an adverse effect. (OSHA notes that for purposes of this document, the ADI is not to be interpreted as a regulatory limit, but rather as a health-based level upon which regulatory considerations can be referenced.)

Although this approach requires only two steps, each step introduces uncertainty as to whether the final ADI estimate does indeed represent an exposure level below which an adverse effect is unlikely to be induced. Implicit in the uncertainty factor approach is the assumption that there is a threshold level of exposure below which a toxic

response will not be induced, and the NOEL is an estimate of that threshold. There is debate, however, as to whether non-cancer effects, in particular developmental effects, are indeed threshold phenomena. Brent, for example, has argued that teratogenesis "is by and large a *threshold* phenomena, which means that the vast majority of teratogenic agents have a 'no effect' dose * * *" (Ex. 5–126). He cites thalidomide as an example of a developmental toxin which if administered at 50 mg during the critical gestation period can effect a majority of embryos but which will have no effect on the development of embryos administered at 0.5 mg during the same period.

Others, however, maintain that not all developmental toxins have a threshold. Gaylor et al argue that "if a chemical produces a malformation by different mechanism than spontaneous malformations, then there is a possibility for a threshold dose. However, if a chemical produces a malformation by augmenting or accelerating an already existing mechanism that produces spontaneous malformations, then no population threshold can exist" (Ex. 5–128). Rodricks et al maintain that "in cases in which the mechanisms of toxic or carcinogenic action are not understood, it is not possible to establish or reject the threshold hypothesis or no-threshold hypothesis, at least with the degree of certainty usually sought in scientific proof. There are numerous reasons to believe that thresholds must exist * * *, but generalization to all agents and all effects is not possible" (Ex. 5–130).

In its comments in response to OSHA's Advance Notice of Proposed Rulemaking (ANPR), the Chemical Manufacturer's Association (CMA) argues that acceptance of the existence of thresholds is central to evaluating reproductive and developmental risk (Ex. 7–17). CMA bases its position in part on the "demonstrated regenerative, repair and regulation abilities of an embryo and fetus." In addition, CMA notes that fetuses are protected by maternal placenta and the metabolic processes of the pregnant female that break down, excrete, store, or otherwise inactivate chemicals before they can damage the embryo. CMA concludes that "to make appropriate decisions about potential human reproductive risks, OSHA must focus its attention on studies that determine the threshold below which adverse effects on the adult or the conceptus will not occur" (Ex. 7–17).

While OSHA believes it is likely that most chemically-induced developmental effects have a threshold, it would seem that CMA is confusing the finding of a NOEL in an animal bioassay with the certainty a threshold exists. As noted by Rodricks et al, the existence of a NOEL from experimental data is consistent with the hypothesis of a threshold but is not sufficient to prove it (Ex. 5–130). Furthermore, if a threshold does exist, there is little reason to believe that the NOEL is indeed the threshold as CMA implies. The exposure level at which no effect is observed is not only a function of the potency of the substance under test but also a function of the experimental design of a study. For example, an exposure level which is not tested cannot be a NOEL. If a researcher tests a substance at 10, 25, and 50 ppm, then the NOEL can only be 10, 25, or 50 ppm. As noted by Rodricks et al, "[f]or practical reasons, only a few doses can be used in experimental studies. While these doses may fall above and below the true threshold doses, it is only by chance that any will precisely match the true threshold doses (and this chance is very small)."

The exposure level found to be the NOEL in a study, (and the exposure level found to be the LOEL in a study), will depend not only upon the exposure levels chosen by a researcher but also upon the numbers of animals in each exposure group. This is because exposure group size is an important factor in determining whether an observed excess of an effect is statistically significant. For example, suppose an experiment is run, and an effect is found to occur in 20% of the animals in the unexposed group. If there are 15 animals in each exposure group, then 60% of the animals exposed at some level X, (9 out of 15), must experience the effect in order to find that level X is the LOEL (i.e. 60% is the lowest rate at which the effect can occur in order to be statistically significantly elevated at the p=0.05 level over the 20% rate in the unexposed animals using a Fisher's Exact Test). If level X induces the effect in only 8 of the 15 exposed animals, then the rate for the effect in this exposure group will not be statistically significant.

If, in the example above, the number of animals in each exposure group were larger, then the proportion of exposed animals which must experience the effect to achieve statistical significance over the 20% rate in the unexposed group decreases. Thus, if there were 30 animals in each exposure group, then only 43.3% of the animals exposed to some level Y, (13 out of 30), must experience the effect in order to find that level Y is the LOEL. If there were 1,000 animals in each exposure group, then only 23.2% of the animals exposed to some level Z, (232 out of 1,000), must experience the effect in order to find that level Z is the LOEL.

It is clear from this example that the exposure levels determined to be the NOEL and LOEL will depend on study group size. The "true" NOEL may be lower than the NOEL determined for a particular study, but the study may not be sensitive enough to detect it. Few studies employ 1,000 animals per group in their study design, and thus the direction of uncertainty due to sample size is towards overestimating the NOEL and LOEL; a response rate which is statistically significant for a small number of study animals will always be statistically significant for any large number of animals.

Because small exposure group size and therefore lack of statistical power can lead to the erroneous conclusion that exposure induces no effect, the NOEL is not taken by itself to represent the "acceptable daily intake" (ADI). Instead, the NOEL is adjusted by an uncertainty factor not only to account for uncertainties associated with the experimental design but also to account for uncertainties associated with extrapolation across species (i.e. from experimental animals to humans) and to account for the variability of responses within a human population (i.e. intra-species variability).

In their chapter on risk assessment for effects other than cancer, Rodricks et al provide a brief history of the origins of the uncertainty factor (Ex. 5–130). Referring to uncertainty factors as safety factors, these authors write:

> The safety factor approach was originated by Lehman and Fitzhugh of the FDA who indicated that variability in sensitivity to chemicals (expressed as differences in dose causing similar responses) across several species was usually in the range of two or threefold and did not appear to exceed tenfold. They also indicated that the variability among extensively outbred individuals and individuals of all ages and degrees of susceptibility (e.g., persons in the general population) appeared also to be less than one order of magnitude. They consequently founded the 100-fold safety factor as a general method of dealing with the uncertainties of extrapolation. This incorporated a factor of 10 when extrapolating from animals to humans and an additional factor of 10 to account for differential sensitivities within the human population. When this 100-fold safety factor is applied to the highest experimental animal NOEL, it is considered to approximate a NOEL for humans in the general population, and becomes the ADI.

Since the concept of uncertainty factors was first introduced, it has been modified to derive an ADI from data of varying quality. For example, the FDA has expanded the original 100-fold uncertainty factor approach. When a NOEL is derived from subchronic animal data but that NOEL has been identified in two species, then the FDA recommends an uncertainty factor of 1000. Here, the additional factor of 10 is needed to account for the added uncertainty in estimating a chronic ADI from subchronic data. When a NOEL is derived from subchronic animal data but that NOEL has been identified in only one species, FDA recommends an uncertainty factor of 2000. The additional two-fold factor is intended to account for possible interspecies differences (Ex. 5–130).

If a NOEL cannot be identified from study data, that is, if the lowest exposure level used in a study induces an effect at a rate statistically significantly greater than observed among the unexposed group, then the uncertainty factor is applied to the LOEL instead of the NOEL to derive the ADI. As with the NOEL, the uncertainty factor applied to the LOEL is used to account for the uncertainties and variability described above, but EPA recommends that an additional uncertainty factor, usually between one and 10, be used to account for the fact that no NOEL was identified from the data (Ex. 5–131).

Although the selection of uncertainty factors in the multiples of ten may appear to be arbitrary, there is some experimental support for their selection, and this is discussed at some length in an article by Dourson and Stara (Ex. 4–113). (The scientific basis underlying the selection and use of uncertainty factors is further discussed in OSHA Exhibit 5–155.) In addition, these choices of uncertainty factors as well as the entire uncertainty factor approach for non-cancer health effects have been adopted by a number of governmental agencies and international organizations including the U.S. Environmental Protection Agency (EPA), the U.S. Food and Drug Administration (FDA), the Joint Food and Agricultural Organization of the World Health Organization (FAO/WHO), and the National Academy of Sciences (NAS). The uncertainty factor approach for regulating occupational exposure to glycol ethers is supported by many of the commentors responding to OSHA's ANPR including CMA (Ex. 7–17), DOW Chemical (Ex. 7–21), and Du Pont (Ex. 7–28), among others, although not all agree on the value of the uncertainty factor which should be used.

As CMA points out in its comments, the uncertainty factor approach "has been well established for regulating reproductive risks" (Ex. 7–17). As noted above, the ADI represents an exposure level below which an adverse effect is unlikely, and confidence that the ADI is an exposure level below which an adverse effect is unlikely will depend, to a large extent, upon the quality of the data from which it is derived. If we know something of the mechanism which induces an effect and if we know that that mechanism is activated when exposure exceeds some threshold level, then our confidence that an adverse effect is unlikely at exposure levels at or below the ADI increases further.

C. Assessment of the Developmental Risk From Exposures to Glycol Ethers

1. Introduction

According to the EPA Guidelines for Developmental Toxicity Risk Assessment (Ex. 5–153), the major manifestations of developmental toxicity include (1) death of the developing organism; (2) malformations; (3) altered growth, and (4) functional deficiency. The studies used by OSHA for its assessment of developmental risk from glycol ethers employed a protocol exposing fetuses *in utero* during organogenesis, the phase of gestation during which the major organ systems develop. The pregnant dams were sacrificed at the end of this gestational phase and prior to giving birth. Each of the unborn fetuses was then examined. Under this protocol the endpoints of interest in these studies are the first three of the outcomes listed above.

The endpoint "death of the developing organism" includes resorptions and intra-uterine deaths. Preimplantation loss is not a measure of developmental toxicity in these studies because the pregnant females were not exposed to any glycol ether until after implantation had occurred.

A malformation is usually defined as a permanent structural change that may adversely affect survival, development, or function. A malformation is different than a variation which is usually defined as a divergence beyond the usual range of structural constitution that may not adversely affect survival or health. It is not always possible, however, to distinguish between variations and malformations because, as noted by EPA in its Guidelines, "there exists a continuum of responses from the normal to extreme deviant." Furthermore, there is no generally accepted classification of malformations. Other terminology which is also used includes anomalies, deformations, and aberrations, but, as EPA points out, these terms are no better defined. Nonetheless, these effects indicate toxicity to the developing organism when associated with exposure to a chemical.

Altered growth is defined by EPA as an alteration in offspring organ or body weight or size. This endpoint may be reversible or may result in a permanent change.

As noted by the Interagency Regulatory Liaison Group (IRLG) in its Workshop on Reproductive Toxicity Risk Assessment, "the developmental toxicity endpoints encountered in experimental animals do not and should not be expected necessarily to mimic those observed in humans exposed to the same toxicant" and "the specific agent-related endpoints in humans are not always reproduced in experimental animals" (Ex. 5–018). All substances known to cause developmental effects in humans, however, have also been found to induce developmental effects in animals with the exception of the coumarin anticoagulants which have not been studied extensively in animals (Ex. 4–147).

Schardein has compared the effects of all "known or possible" teratogens in humans with the teratogenic responses observed in laboratory animals exposed to these substances (Ex. 4–147). Each of the developmental toxicants he looked at induced some developmental effect in at least one animal species, but only one class of substances, androgenic hormones, induced the same effect as observed in humans in each species which experienced an effect. Androgenic hormones have been tested in fourteen species, and only one species tested, sheep, experienced no effect.

The more common result in cross-species testing of developmental toxicants can be found in the case of thalidomide which was found to induce limb defects (i.e., missing limbs) in humans. In laboratory animals, the drug was found to induce developmental effects in seventeen species, but an effect concordant to the effect observed in humans was observed in only nine species. Furthermore, eight of these nine species, the rhesus monkey, the marmoset, the baboon, the bonnet monkey, the crab-eating monkey, the green monkey, the Japanese monkey, and the stump-tailed monkey, are not the usual animals used in animal bioassays. The rabbit was the sole rodent species to exhibit an effect concordant to the effect observed in humans (Ex. 4–147).

The IRLG has noted that there is "no evidence that any particular species or

strain more consistently predicts human susceptibility to animal teratogens than any other species or strain" (Ex. 5–018). This is borne out by Schardein (Ex. 4–147). He found that the rabbit, which experienced an effect from thalidomide concordant to the effect induced humans, experienced no adverse developmental effects from alcohol or diethylstilbestrol (DES), both known to cause birth defects in humans. The mouse experienced effects concordant to those in humans for a number of substances including alcohol, diethylstilbestrol, and antithyroid compounds, but neither aminopterin nor streptomycin, substances found to induce developmental effects in humans, induced any developmental effects in this species. Rats experienced adverse developmental effects from exposure to more of the toxicants considered by Schardein, (rats, and mice were the most commonly used animals in tests of the toxicants considered by Schardein), but the effects were concordant with those in humans in only little more than half the substances and at least one substance considered by Schardein, trimethadione, induced no effect in this species.

The response to a developmental toxicant in animal bioassay can be measured in a number of ways. One of these is the number of fetuses affected per number of fetuses exposed. This shall be referred to as the "fetus measure of response". While this measure gives some indication of the potency of a developmental toxicant, it treats each fetus independently of all other fetuses thereby ignoring the "little effect". The litter effect is the tendency for littermates to respond more like each other than like animals from different litters. Furthermore, the fetus measure cannot distinguish between the case where all litters have one or two affected fetuses and the case where all affected fetuses are from only one or two litters, although these two scenarios have different implications for the potency of a developmental toxicant.

An alternative measure of response is number of litters with at least one affected fetus per total number of litters exposed, referred to as the "litter measure of response". This measure treats the litters as the experimental unit because, as noted by EPA in its Guidelines, it is the maternal animal and not the conceptus which is treated during gestation (Ex. 5–153). This is the measure of response favored by EPA for evaluating the potency of a developmental toxicant. The drawback to this measure, however, is that it gives equal weight to a litter with one affected fetus as it gives to a litter with all affected fetuses.

In addition to both of these measures, a third measure which OSHA has considered for evaluating response in animals exposed to developmental toxicants is average number of fetuses affected per affected litter. This shall be referred to as the "fetus/litter measure of response". This measure provides a compliment to the fetus measure of response and the litter measure of response, for, whereas the former indicates only the number of fetuses affected and the latter indicates only the number of litters affected, the fetus/litter measure provides an indication of how severe an effect may be within an affected litter. For example, a fetus/litter value of 1.0 would indicate that only one fetus was affected in each of the affected litters. A fetus/litter value of 2.0 would indicate that *on average*, two fetuses were affected in each of the litters with affected fetuses. Comparison of fetus/litter values across exposure groups would allow one to determine whether more fetuses were affected in each affected litter as dose increases. The limitation of this measure, however, is that unlike the other two measures discussed above, the fetus/litter measure of response has utility only as a descriptive measure and can not be used for statistical inference because the statistical distribution of this measure is unknown.

2. Choice of Data

a. *2–ME.* OSHA has identified three well conducted animal bioassays for 2–ME which are suitable for assessing the risk of developmental effects from occupational exposure to this glycol ether and for determining the acceptable daily intake or ADI. (As noted earlier for purposed of this document, the ADI is not a regulatory limit but rather a health-based level which describes the level at which humans are unlikely to exhibit effects similar to those observed in experimental data.) These studies were chosen because in each of these studies, exposure levels were documented, the routes of exposure were the same as is found in most occupational settings (i.e. inhalation), concurrent controls were used, two or more exposure levels of the test substance were employed, statistically significant excesses of developmental effects were observed in exposed groups, and individual litter data were available.

Hanley and associates of the Dow Chemical Company conducted three animal inhalation bioassays for 2–ME using female rats, rabbits, and mice (Exs. 4–042a and 4–106). Groups of 30 to 31 bred Fisher 344 rats and 20 to 30 bred New Zealand white rabbits were exposed to 2–ME at levels of 3, 10, or 50 ppm. Groups of 30 to 32 bred CF–1 mice were exposed to 2–ME at levels of 10 or 50 ppm. The test article was supplied by Dow and was 99.96% pure. Thirty bred rats, 30 bred rabbits, and 31 bred mice served as controls.

The female rats were bred one to one with male rats of the same strain. The female mice were bred two to one with male mice of the same strain (two females to one male), and the rabbits were bred through artificial insemination. Animals were randomly assigned to exposure groups. Exposure occurred six hours per day through the organogenesis phase of gestation: From day 6 through day 15 of gestation for rats and mice and from day 6 through day 18 gestation for rabbits. All animals were given food and water *ad libitum* except during periods of exposure and were observed daily throughout the experimental period for indications of toxicity and adverse effects of treatment.

Animals found dead or moribund during the course of the study were submitted for gross pathological examination. Surviving mice were sacrificed on day 18 of gestation, surviving rats were sacrificed on day 21 of gestation, and surviving rabbits were sacrificed on day 29 of gestation. Caesarean sections and examinations were preformed on all animals to determine: (1) The number and position of fetuses *in utero;* (2) the number of live and dead fetuses; (3) the number and position of resorption sites; (4) the sex, and body weight, and crown-rump length of each fetus; and (5) any gross external alternations. In addition, the rats and the rabbits were examined for number of corpora lutea. The uteri of apparently non-pregnant animals were stained and examined for evidence of implantation sites to determine whether pregnancy had occurred. One half of each litter was dissected and examined for soft tissue alternations. All fetuses were examined for skeletal alternations.

b. *2–EE.* OSHA has identified two well conducted animal inhalation bioassays for 2–EE which are suitable for assessing the risk of developmental effects from occupational exposure to this glycol ether and for determining the acceptable daily intake or ADI. As with 2–ME, both of these studies were chosen because in each, exposure levels were documented, the routes of exposure were the same as if found in most occupational settings (i.e. inhalation), concurrent controls were used, two or more exposure levels of the test substance were employed, statistically significant excesses of developmental

effects were observed in exposed groups, and individual litter data were available.

Tinston, Doe and associates of Imperial Chemical Industries PLC conducted two animal inhalation studies for 2–EE using rats and rabbits (Exs. 4–038 and 4–039; see also Ex. 5–071). These studies were sponsored by the Chemical Manufacturer's Association (CMA) and followed a protocol similar to the one used by Hanley et al. Groups of 24 bred rats of the Alpk/AP (Wistar-derived) strain were exposed to 2–EE at levels of 10, 50, or 250 ppm. Groups of 24 bred Dutch rabbits were exposed to 2–EE at levels of 10, 50 and 175 ppm. The test article was supplied by Imperial Chemical Industries and was more than 99% pure. Twenty-four bred rats and 24 bred rabbits served as controls.

The female rats were bred one to one with male rats of the same strain, and female rabbits were bred with 2 male rabbits of the same strain. Animals were randomly assigned to exposure groups. Exposure occurred six hours per day throughout the organogenesis phase of gestation: from day 6 through day 15 of gestation for the rats and from day 6 through day 18 of gestation for the rabbits. All animals were given food and water *ad libitum* except during periods of exposure and were observed daily for their clinical condition.

Terminal sacrifice of the animals occurred on day 21 of gestation for the rats and day 29 of gestation for the rabbits. After sacrifice, the number of corpora lutea in each animal's ovaries was counted. The uterus of each animal was cut open and the number of implantations as well as the number of early and late intra-uterine deaths was determined. An intra-uterine death was judged to be late if fetal tissues were distinguishable. Each fetus which had not died *in utero* was removed from the uterus. These fetuses were weighed and examined for gross defects. Half of the rat fetuses and all of the rabbit fetuses were examined for skeletal defects. All fetuses of both species were examined for external and visceral defects.

3. Bioassay Results

a. 2–ME. In measuring the incidence of effects of 2–Me in fetal rats, rabbits, and mice, Hanley et al grouped the effects into three categories: external alternations, soft tissue alterations, and skeletal alterations. Each of these categories of defects was subdivided further into major defects and minor defects. The study authors provided no explanation as to the criteria used to subdivide these categories, and one must assume it was professional judgement (Exs. 4–047 and 4–106).

Table VI–A presents the incidence of developmental effects in fetal rats exposed to 2–ME. Incidence is reported using each of the measures of response discussed above (i.e. fetus, litter and fetus/litter). the only effects presented in this discussion are those which occurred in any exposed group at a rate statistically significantly greater than the rate in the unexposed group at the p=0.05 level using either the fetus measure of response or the litter measure of response. Statistical significance was determined using Fisher's Exact Test.

TABLE VI–A.—INCIDENCE OF DEVELOPMENTAL EFFECTS OBSERVED IN FISHER 344 RATS EXPOSED TO 2–ME DAYS 6 THROUGH 15 OF GESTATION [1]

Minor skeletal alterations	Control	3 ppm	10 ppm	50 ppm
Delayed ossification of centra:				
Fetus [2]	4/287	3/283	6/293	[3] 19/307
Litters [4]	4/29	3/28	5/28	[5] 13/30
Fetus/litter [6]	1.00	1.00	1.20	1.46
Rib spurs:				
Fetus	18/287	13/283	20/293	[3] 57/307
Litters	12/29	10/28	13/28	[3] 26/30
Fetus/litter	1.50	1.30	1.54	2.19
Delayed ossification of sternebrae:				
Fetus	125/287	142/283	131/293	[3] 97/307
Litters	28/29	27/28	27/28	28/30
Fetus/litter	4.46	5.26	4.85	3.40

[1] Data from Hanley et al., Ex. 4–042a.
[2] Incidence is number of fetuses affected divided by the total number of fetuses.
[3] Significantly different than controls at the p ≤ .01 level.
[4] Incidence is number of litters with at least one fetus affected.
[5] Significantly different than controls at the p ≤ .05 level.
[6] Average number of affected fetuses per affected litter.

Delayed ossification of the centra and rib spurs are the two developmental effects which occurred at a rate statistically significantly greater in an exposed group than in the controls. Both of these effects were classified as minor skeletal alterations. Both effects were elevated for the 50 ppm group only, but incidence was significant at the p=0.012 level or lower regardless of measure of response, and the fetus/litter measure of response increases with dose. Delayed ossification of the sternebra was significantly reduced for the 50 ppm group when measured using the fetus measure of response, but it was not significant using the litter measure of response and the fetus/litter measure does not show a dose related trend. The authors attribute the observed deficit of delayed ossification of the sternebra to normal variation and not to exposure to 2–ME.

Table VI–B presents the incidence of developmental effects in fetal rabbits exposed to 2–ME. The same measures of incidence presented for the rats are presented for the rabbits, and the same statistical criteria were used for inclusion of an effect in the table.

TABLE VI–B.—INCIDENCE OF DEVELOPMENTAL EFFECTS OBSERVED IN NEW ZEALAND WHITE RABBITS EXPOSED TO 2–ME DAYS 6 THROUGH 18 OF GESTATION [1]

	Control	3 ppm	10 ppm	50 ppm
Resorptions:				
Fetus [2]	7/180	14/186	[3] 23/210	[3] 46/191
Litters [4]	5/23	10/24	[5] 14/24	[3] 16/24
Fetus/litter [6]	1.40	1.40	1.64	2.88
Major External Alterations [7]				
Arthrogryposis:				
Fetus	0/173	1/172	0/187	[3] 54/145
Litters	0/23	1/23	0/24	[3] 15/22
Fetus/litter	0.00	1.00	0.00	3.60
Anonychia:				
Fetus	0/173	0/172	0/187	[3] 14/145
Litters	0/23	0/23	0/24	[3] 6/22
Fetus/litter	0.00	0.00	0.00	2.33
Brachydactyly:				
Fetus	0/173	0/172	0/187	[3] 6/145
Litters	0/23	0/23	0/24	[5] 4/22
Fetus/litter	0.00	0.00	0.00	1.50
Ectrodactyly:				
Fetus	0/173	1/172	0/187	[3] 6/145
Litters	0/23	0/23	0/24	[5] 4/22
Fetus/litter	0.00	0.00	0.00	1.50
Omphalocele:				
Fetus	0/173	0/172	0/187	[5] 5/145
Litters	0/23	0/23	0/24	2/22
Fetus/litter	0.00	0.00	0.00	2.50
Thinning of abdominal wall:				
Fetus	0/173	0/172	0/187	[3] 6/145
Litters	0/23	0/23	0/24	3/22
Fetus/litter	0.00	0.00	0.00	2.00
Kinky tail:				
Fetus	0/173	0/172	0/167	[5] 4/145
Litters	0/23	0/23	0/24	[5] 4/22
Fetus/litter	0.00	0.00	0.00	1.00
Minor External Alterations				
Misalignment of palatine rugae:				
Fetus	0/173	0/174	0/187	[3] 27/145
Litters	0/23	0/23	0/24	[3] 11/22
Fetus/litter	0.00	0.00	0.00	2.45
Narrowed tip of tail:				
Fetus	0/173	0/172	0/187	[3] 6/145
Litters	0/23	0/23	0/24	[3] 6/22
Fetus/litter	0.00	0.00	0.00	1.00
Major Soft Tissue Alterations [8]				
Coarctation of the aortic arch:				
Fetus	0/95	0/93	0/101	[3] 13/80
Litters	0/23	0/23	0/24	[3] 6/22
Fetus/litter	0.00	0.00	0.00	2.17
Ventricular septal defect:				
Fetus	0/95	0/93	0/101	[3] 34/80
Litters	0/23	0/23	0/24	[3] 15/22
Fetus/litter	0.00	0.00	0.00	2.27
Hypoplastic spleen:				
Fetus	0/95	0/93	0/101	[3] 25/80
Litters	0/23	0/23	0/24	[3] 13/22
Fetus/litter	0.00	0.00	0.00	1.92
Dilated renal pelvis:				
Fetus	0/95	1/93	1/101	[3] 28/80
Litters	0/23	1/23	1/24	[3] 14/22
Fetus/litter	0.00	1.00	1.00	2.00
Patent ductus arteriosis:				
Fetus	0/95	1/93	0/101	[5] 5/80
Litters	0/23	1/23	0/24	[5] 4/22
Fetus/litter	0.00	1.00	0.00	1.25
Hypoplastic gall bladder:				
Fetus	0/95	0/93	0/101	[5] 4/80
Litters	0/23	0/23	0/24	[5] 4/22
Fetus/litter	0.00	0.00	0.00	1.00
Pale spleen:				
Fetus	4/95	2/93	1/101	[3] 30/80

TABLE VI–B.—INCIDENCE OF DEVELOPMENTAL EFFECTS OBSERVED IN NEW ZEALAND WHITE RABBITS EXPOSED TO 2–ME DAYS 6 THROUGH 18 OF GESTATION [1]—Continued

	Control	3 ppm	10 ppm	50 ppm
Litters	1/23	1/23	1/24	[3] 16/22
Fetus/litter	4.00	2.00	1.00	1.88
Dilated ureter:				
Fetus	0/95	0/93	0/101	[3] 7/80
Litters	0/23	0/23	0/24	[3] 6/22
Fetus/litter	0.00	0.00	0.00	1.17
Convoluted ureter:				
Fetus	3/95	2/93	0/101	[3] 12/80
Litters	2/23	2/23	0/24	[5] 8/22
Fetus/litter	1.50	1.00	0.00	1.50
Paraovarian cyst:				
Fetus [9]	0/48	1/47	1/53	[3] 9/40
Litters [10]	0/23	1/21	1/24	[3] 8/22
Fetus/litter	0.00	1.00	1.00	1 13
Testicular cyst:				
Fetus [9]	0/47	0/46	0/48	[5] 5/40
Litters	0/22	0/23	0/23	3/22
Fetus/litter	0.00	1.00	1.00	1.13
Shortened nasals, maxillae and mandibles:				
Fetus	0/173	0/172	0/187	[3] 6/145
Litters	0/23	0/23	0/24	1/22
Fetus/litter	0.00	0.00	0.00	6.00
Major Skeletal Alterations [7]				
Missing phalange(s):				
Fetus	0/173	0/172	0/187	[3] 7/145
Litters	0/23	0/23	0/24	[5] 4/22
Fetus/litter	0.00	0.00	0.00	1.75
Missing metacarpal(s):				
Fetus	0/173	0/172	0/187	[5] 4/145
Litters	0/23	0/23	0/24	2/22
Fetus/litter	0.00	0.00	0.00	2.00
Missing metatarsal(s):				
Fetus	0/173	0/172	0/187	[3] 9/145
Litters	0/23	0/23	0/24	[5] 4/22
Fetus/litter	0.00	0.00	0.00	2.25
Shortened ribs:				
Fetus	0/173	0/172	0/187	[5] 4/145
Litters	0/23	0/23	0/24	2/22
Fetus/litter	0.00	0.00	0.00	2.00
Enlarged interparietals:				
Fetus	0/173	0/172	0/187	[5] 5/145
Litters	0/23	0/23	0/24	1/22
Fetus/litter	0.00	0.00	0.00	5.00
Delayed ossification of the hyoid:				
Fetus	1/173	2/172	2/187	[3] 14/145
Litters	1/23	2/23	2/24	[3] 8/22
Fetus/litter	1.00	1.00	1.00	1.75
Delayed ossification of the tarsals(s):				
Fetus	0/173	3/172	1/187	[3] 17/145
Litters	0/23	3/23	1/24	[3] 8/22
Fetus/litter	0.00	1.00	1.00	2.13
Extra lumbar ribs:				
Fetus	0/173	0/172	0/187	[3] 13/145
Litters	0/23	0/23	0/24	[3] 7/22
Fetus/litter	0.00	0.00	0.00	1.86
Shortened lumbar ribs:				
Fetus	0/173	0/172	0/187	[5] 4/145
Litters	0/23	0/23	0/24	2/22
Fetus/litter	0.00	0.00	0.00	1.86
Delayed ossification of the centra:				
Fetus	4/173	2/172	0/187	[5] 11/145
Litters	4/23	2/23	[5] 0/24	8/22
Fetus/litter	1.00	1.00	0.00	1.38
Delayed ossification of the sternebrae:				
Fetus	82/173	93/172	[3] 123/187	[3] 127/145
Litters	23/23	23/23	24/24	22/22
Fetus/litter	3.57	4.04	5.13	5.77
Fused sternebrae:				
Fetus	3/173	2/172	0/187	[5] 11/145
Litters	3/23	2/23	0/24	8/22

TABLE VI–B.—INCIDENCE OF DEVELOPMENTAL EFFECTS OBSERVED IN NEW ZEALAND WHITE RABBITS EXPOSED TO 2–ME DAYS 6 THROUGH 18 OF GESTATION [1]—Continued

	Control	3 ppm	10 ppm	50 ppm
Fetus/litter	3.57	4.04	5.13	1.33
Sternebrae—extra site of ossification:				
Fetus	0/173	0/172	0/187	[5] 4/145
Litters	0/23	0/23	0/24	3/22
Fetus/litter	3.57	4.04	5.13	1.33

[1] Data from Hanley et al, Ex. 4–042a.
[2] Incidence is number of fetuses affected divided by the total number of fetuses.
[3] Significantly different than controls at the p ≤ .01 level.
[4] Incidence is number of litters with at least one fetus affected.
[5] Significantly different than controls at the p ≤ .05 level.
[6] Average number of affected fetuses per affected litter.
[7] Denominator (i.e. the number of animals at risk) is adjusted for resorptions.
[8] Only a portion of fetuses in each exposure group were examined for soft tissue alternations.
[9] Denominator not specified by study authors. Number of fetuses at risk estimated by applying male/female ratio for each exposure group to number of fetuses examined for soft tissue alternations.
[10] Denominator is number of litters with at least one female fetus.
[11] Denominator is number of litters with at least one male fetus.

Incidence of resorptions was statistically significantly increased using both the fetus and the litter measures of response for the 10 ppm and the 50 ppm group. The fetus/litter measure of incidence shows a dose related increase. The study authors note that although resorptions are significantly elevated for the 10 ppm group, the observed rate for fetuses (11%) and for litters (58%) are comparable to the historical incidence of resorptions observed in other studies in the same laboratory (7% to 15% for fetuses and 38% to 74% for litters). They attribute the finding of statistical significance of resorptions in this exposure group to the unusually low control group incidence of resorptions (4% for fetuses and 22% for litters) and not to exposure.

Major external alterations in rabbits occurred at a significant excess in the 50 ppm group only. Incidence of arthrogryposis (abnormal flexure of the forelimbs), anonychia (absence of nails), brachydactyly (short digits), ectrodactyly (absence of part or all of a digit), and kinky tail occurred at a statistically significantly elevated rate for both the fetus measure of response and the litter measure of response. Incidence of omphalocele (protrusion of the intestines through the abdominal wall), and thinning of the abdominal wall was significant for fetuses but not for litters.

As with major external alterations, the minor external alterations, misalignment of the palatine rugae and narrowed tip of tail, occurred at a significant excess only in the 50 ppm group. Both were statistically significant using both the fetus and the litter measure of response.

What is most striking about these data is that every external alteration observed, major or minor, was observed only in the 50 ppm group except for one fetus in the 3 ppm group observed with arthrogryposis. The almost total absence of background incidence of these effects reduces the uncertainty as to whether the response in the 50 ppm group could be attributed to chance variation rather than exposure to 2–ME.

While all the fetal rabbits were examined for external alterations, only half were examined for soft tissue alterations. Thus, the study had less power to detect this type of developmental effect. Nonetheless, a large number of soft tissue alterations were observed at a significant excess in 50 ppm group. Incidence of these effects was not significantly elevated over controls in any other exposure group. The major soft tissue alterations were coarctation of the aortic arch, ventricular septal defect, hypoplastic spleen, and dilated renal pelvis, and incidence of these effects in the 50 ppm group were statistically significant using both the fetus and the litter measure of response at the p=0.009 level or lower. All but one minor soft tissue alteration occurred at a statistically significant rate in the 50 ppm group using both measures of response. These alterations were patent ductus arteriosis, hypoplastic gall bladder, pale spleen, dilated ureter, convoluted ureter, and parovarian cysts. Testicular cysts were statistically significant in male fetal rabbits in the 50 ppm group using the fetus measure but not using the litter measure. Here again, the almost total absence of any of these effects in the control group, the 3 ppm group, or the 10 ppm group lends further support to 2–ME as the cause for these effects in the 50 ppm group.

All fetuses were examined for skeletal alterations, yet incidence of all but two of these alterations was significantly elevated in the 50 ppm group only. The major skeletal alterations which occurred at a significantly elevated rate in this group using both measures of response were missing phalanges and missing metatarsal; the minor skeletal alterations were delayed ossification of the hyoid, delayed ossification of the tarsals, and extra lumbar ribs. Incidence of shortened nasals, maxillae and mandibles and shortened ribs, both major external alterations, were significantly elevated in the 50 ppm group also but only when measured in fetuses. Likewise, incidence of enlarged interparietals, shortened lumbar ribs, delayed ossification of the centra, fused sternebra, and extra site of sternebra ossification, all minor external alterations, were significantly elevated in the 50 ppm group but again, only for the fetus measure of response. There was a statistically significant deficit of delayed ossification of the centra in litters in the 10 ppm group, this most likely is attributable to chance variation and not to exposure. Delayed ossification of the sternebra was significantly elevated over controls in fetuses in the 10 ppm and the 50 ppm exposure groups, but the incidence of this effect measured in litters at both exposure levels was the same (100%) as in the control and 3 ppm exposure group.

Exposure to 2–ME did not have as strong an effect in fetal mice as it did in fetal rabbits. Table VI–C presents the results of the mouse bioassay. Criteria for inclusion of an effect in the table in the same as was used for both rats and rabbits. Only one effect, extra lumbar ribs, a minor skeletal alteration, was significantly elevated using both the fetus and the litter measure of response, and this was in the 50 ppm group.

Incidences of resorption, hypoplastic testicle, and extra site of sternebra ossification in the 50 ppm group were significantly elevated over controls but only in fetuses and not in litters. Incidence of testicular hemorrhage and delayed ossification of the sternebra was significantly elevated over controls in the 10 ppm group and the 50 ppm using the fetus measure of response, but incidence of these effects was not significant when response was measured in litters.

TABLE VI–C.—INCIDENCE OF DEVELOPMENTAL EFFECTS OBSERVED IN CF–1 MICE EXPOSED TO 2–ME DAYS 6 THROUGH 15 OF GESTATION [1]

	Control	10 ppm	50 ppm
Resorptions:			
Fetus [2]	25/342	25/285	[3] 35/286
Litters [4]	16/26	14/23	19/24
Fetus/litter [5]	1.56	1.79	1.94
Minor Soft Tissue Alterations [6]			
Hypoplastic testicle:			
Fetus [7]	2/86	3/64	[3] 8/66
Litters [8]	2/26	3/23	6/22
Fetus/litter	1.00	1.00	1.33
Testicular hemorrhage:			
Fetus [7]	2/86	3/64	[3] 8/66
Litters [8]	2/26	3/23	6/22
Fetus/litter	1.00	1.00	1.33
Minor Skeletal Alterations [9]			
Extra lumbar rib:			
Fetus	48/317	49/260	[10] 82/251
Litters	14/26	14/23	[3] 21/24
Fetus/litter	3.43	3.50	3.90
Delayed ossification of the sternebrae:			
Fetus	76/317	[3] 43/260	[3] 77/251
Litters	18/26	13/23	21/24
Fetus/litter	3.43	3.50	3.90
Sternebrae—extra site of ossification:			
Fetus	21/317	9/260	[3] 8/251
Litters	9/26	6/23	4/24
Fetus/litter	3.43	3.50	3.90

[1] Data from Hanley et al, Ex. 4–106.
[2] Incidence is number of fetuses affected divided by the total number of fetuses.
[3] Significantly different than controls at the $p \leq .05$ level.
[4] Incidence is number of litters with at least one fetus affected.
[5] Average number of affected fetuses per affected litter.
[6] Only a portion of fetuses in each exposure group were examined for soft tissue alterations.
[7] Denominator not specified by study authors. Number of fetuses at risk estimated by applying male/female ratio for each exposure group to number of fetuses examined for soft tissue alterations.
[8] Denominator is number of litters with at least one male fetus.
[9] Denominator (i.e. the number of animals at risk) is adjusted for resorptions.
[10] Significantly different than controls at the $p \leq .01$ level.

b. *2–EE.* In their studies of the developmental effects of 2–EE on fetal rats and fetal rabbits, Tinston, Doe et al., (Exs. 4–038 and 4–039; see also Ex. 5–071), classified effects differently than Hanley et al. Abnormalities which were deemed either rare or lethal or both were classified as major external and visceral defects or major skeletal defects while those defects which were judged to be small changes that would not normally impair survival and that occur at a moderate to low frequency in the strain were classified as minor external and visceral defects or minor skeletal defects. A third classification, variant, was used to describe those defects which are common in the species and are not normally deleterious.

Another difference between the 2–EE bioassays and the 2–ME bioassays is that the investigators in the 2–EE bioassays considered much more specific effects than did the investigators in the 2–ME bioassays. For example, Tinston et al. looked at the degree of ossification (i.e. partially ossified or not ossified) of each centrum and sternebra in each fetus examined. Thus, the study authors report the incidence of partial ossification of the first sternebra, partial ossification of the second sternebra, and so forth. In the 2–ME bioassays, on the other hand, Hanley et al. grouped any ossification defect of any sternebra into the category "delayed ossification of the sternebra" and any ossification defect of any centrum into the category "delayed ossification of the centra." The different approaches for measuring the incidence of effects have implications for the inferences which can be drawn from analysis of the study results, and these implications will be discussed in the next section.

Table VI–D presents the incidence of developmental effects in fetal rats exposed to 2–EE. As with the results from the 2–ME bioassays, incidence is reported using the fetus, litter, and fetus/litter measures of response, and only those effects which occurred in any exposed group at a statistically significantly greater rate than in control using either the fetus or the litter measure of response are included.

Again, statistical significance was determined using Fisher's Exact Test with a critical value of p=0.05.

TABLE VI–D.—INCIDENCE OF DEVELOPMENTAL EFFECTS OBSERVED IN WISTAR RATS EXPOSED TO 2–EE DAYS 6 THROUGH 15 OF GESTATION[1]

	Control	10 ppm	50 ppm	250 ppm
All intra-uterine deaths:				
Fetus[2]	16/297	22/277	12/261	[3]32/266
Litters[4]	12/23	15/24	10/22	12/21
Fetus/litter[5]	1.33	1.47	1.20	2.67
Late intra-uterine deaths:				
Fetus[6]	3/284	3/258	2/251	[3]17/251
Litters	2/23	2/24	2/22	[7]7/21
Fetus/litter	1.50	1.50	1.00	2.43
Minor Skeletal Anomalies[6]				
Skull—partially ossified frontals:				
Fetus	1/147	0/131	4/129	[3]14/122
Litters	1/23	0/24	4/22	[7]7/21
Fetus/litter	1.00	0.00	1.00	2.00
Skull—partially ossified parietal:				
Fetus	10/147	[3]1/131	15/129	[3]35/122
Litters	6/23	[7]1/24	8/22	[3]17/21
Fetus/litter	1.67	1.00	1.88	2.06
Skull—partially ossified interparietal:				
Fetus	26/147	[3]3/131	24/129	[3]40/122
Litters	10/23	[7]3/24	12/22	[7]17/21
Fetus/litter	2.60	1.00	2.00	2.35
Skull—odontoid not ossified:				
Fetus	26/147	19/131	32/129	[3]93/122
Litters	13/23	10/24	16/22	[3]20/21
Fetus/litter	2.00	1.90	2.00	4.65
Cervical centrum #3 not ossified:				
Fetus	14/147	21/131	[7]25/129	[3]115/122
Litters	6/23	9/24	[7]12/22	[3]21/21
Fetus/litter	2.33	2.33	2.08	5.48
Cervical centrum #4 not ossified:				
Fetus	10/147	7/131	16/129	[3]109/122
Litters	5/23	4/24	[7]11/22	[3]21/21
Fetus/litter	2.00	1.75	1.45	5.19
Cervical centrum #5 not ossified:				
Fetus	2/147	5/131	[7]9/129	[3]98/122
Litters	1/23	3/24	[7]6/22	[3]21/21
Fetus/litter	2.00	1.67	1.50	4.67
Cervical centrum #6 not ossified:				
Fetus	1/147	2/131	[7]6/129	[3]84/122
Litters	1/23	2/24	4/22	[3]20/21
Fetus/litter	1.00	1.00	1.50	4.20
Cervical centrum #7 not ossified:				
Fetus	0/147	0/131	2/129	[3]26/122
Litters	0/23	0/24	2/22	[3]10/21
Fetus/litter	0.00	0.00	1.00	2.60
Thoracic centrum #8 partially ossified:				
Fetus	0/147	0/131	0/129	[3]6/122
Litters	0/23	0/24	0/22	[3]6/21
Fetus/litter	0.00	0.00	0.00	1.00
Thoracic centrum #9 partially ossified:				
Fetus	0/147	1/131	0/129	[3]7/122
Litters	0/23	1/24	0/22	[7]5/21
Fetus/litter	0.00	1.00	0.00	1.40
Thoracic centrum #10 partially ossified:				
Fetus	0/147	0/131	0/129	[3]18/122
Litters	0/23	0/24	0/22	[3]12/21
Fetus/litter	0.00	0.00	0.00	1.50
Thoracic centrum #11 partially ossified:				
Fetus	5/147	0/131	1/129	[3]19/122
Litters	5/23	0/24	1/22	10/21
Fetus/litter	1.00	0.00	1.00	1.90
Thoracic centrum #12 partially ossified:				
Fetus	2/147	1/131	4/129	[3]17/122
Litters	2/23	1/24	4/22	[3]10/21
Fetus/litter	1.00	1.00	1.00	1.70

TABLE VI–D.—INCIDENCE OF DEVELOPMENTAL EFFECTS OBSERVED IN WISTAR RATS EXPOSED TO 2–EE DAYS 6 THROUGH 15 OF GESTATION[1]—Continued

	Control	10 ppm	50 ppm	250 ppm
Thoracic centrum #13 partially ossified:				
Fetus	1/147	2/131	3/129	[3]12/122
Litters	1/23	2/24	3/22	[3]8/21
Fetus/litter	1.00	1.00	1.00	1.50
Lumbar centrum #1 partially ossified:				
Fetus	0/147	0/131	1/129	[3]9/122
Litters	0/23	0/24	1/22	[3]6/21
Fetus/litter	0.00	0.00	1.00	1.50
Lumbar traverse process partially ossified—4th right:				
Fetus	0/147	5/131	1/129	[3]6/122
Litters	0/23	5/24	1/22	[7]5/21
Fetus/litter	0.00	1.00	1.00	1.20
Lumbar traverse process partially ossified—4th both:				
Fetus	0/147	3/131	0/129	[7]4/122
Litters	0/23	2/24	0/22	3/21
Fetus/litter	0.00	1.50	0.00	1.33
Sternebra #1 partially ossified:				
Fetus	4/147	2/131	4/129	[3]35/122
Litters	3/23	2/24	4/22	[3]14/21
Fetus/litter	1.33	1.00	1.00	2.50
Sternebra #2 partially ossified:				
Fetus	1/147	2/131	[7]6/129	[3]10/122
Litters	1/23	2/24	5/22	[7]7/21
Fetus/litter	1.00	1.00	1.20	1.43
Skeletal Variants				
Sternebra #6 partially ossified:				
Fetus	0/147	0/131	1/129	[3]8/122
Litters	0/23	0/24	1/22	3/21
Fetus/litter	0.00	0.00	1.00	2.67
Sternebra #4 misaligned:				
Fetus	1/147	0/131	4/129	[7]6/122
Litters	1/23	0/24	4/22	5/21
Fetus/litter	1.00	0.00	1.00	1.20
Sternebra #5 misaligned:				
Fetus	1/147	0/131	2/129	[7]6/122
Litters	1/23	0/24	2/22	4/21
Fetus/litter	1.00	0.00	1.00	1.50
Sternebra #1 bipartite:				
Fetus	0/147	0/131	0/129	[3]9/122
Litters	0/23	0/24	0/22	[3]8/21
Fetus/litter	0.00	0.00	0.00	1.13
Skull—partially ossified occipitals:				
Fetus	141/147	113/131	124/129	[7]122/122
Litters	23/23	23/24	22/22	21/21
Fetus/litter	6.13	4.91	5.64	5.81
Cervical centrum #1 not ossified:				
Fetus	28/147	[7]40/131	[3]48/129	[3]94/122
Litters	13/23	15/24	17/22	[3]21/21
Fetus/litter	2.15	2.67	2.82	4.48
Cervical Centrum #2 not ossified:				
Fetus	52/147	[7]63/131	[3]80/129	[3]118/122
Litters	17/23	22/24	21/22	[7]21/21
Fetus/litter	3.06	2.86	3.81	5.62
Extra (14th) rib—unilateral left short:				
Fetus	5/147	7/131	4/129	[3]15/122
Litters	5/23	7/24	3/22	8/21
Fetus/litter	1.00	1.00	1.33	1.88
Extra (14th) rib—bilateral short:				
Fetus	14/147	12/131	[3]33/129	[3]75/122
Litters	10/23	6/24	15/22	[3]18/21
Fetus/litter	1.40	2.00	2.22	4.17
Pelvic girdle moved posteriorly—27 Pre-Sacral Vertebrae:[9]				
Fetus	1/147	3/131	2/129	[3]15/122
Litters	1/23	2/24	2/22	[7]7/21
Fetus/litter	1.00	1.50	1.00	2.14
Both calcaneum not ossified:[9]				
Fetus	136/147	115/131	119/129	[3]122/122
Litters	23/23	24/24	22/22	21/21
Fetus/litter	5.91	4.79	5.41	5.81

TABLE VI–D.—INCIDENCE OF DEVELOPMENTAL EFFECTS OBSERVED IN WISTAR RATS EXPOSED TO 2–EE DAYS 6 THROUGH 15 OF GESTATION[1]—Continued

	Control	10 ppm	50 ppm	250 ppm
Minor External and Visceral Defects [10]				
Renal pelvic dilation:				
Fetus	19/281	25/255	22/249	[7] 30/234
Litters	12/23	14/24	12/22	[7] 18/21
Fetus/litter	1.58	1.79	1.83	1.67
Hydroureter:				
Fetus	13/281	6/255	[7] 4/249	10/234
Litters	5/23	6/24	3/22	5/21
Fetus/litter	2.60	1.00	1.33	2.00
Limb malrotation:				
Fetus	0/281	[3] 9/255	2/249	3/234
Litters	0/23	4/24	1/22	2/21
Fetus/litter	0.00	2.25	2.00	1.50

[1] Data from Tinston, Doe et al., Exs. 4–038. See also Ex. 5–071.
[2] Incidence is number of fetuses affected divided by the total number of fetuses.
[3] Significantly different than controls at the p ≤ .01 level.
[4] Incidence is number of litters with at least one fetus affected.
[5] Average number of affected fetuses per affected litter.
[6] Denominator (i.e. the number of animals at risk) is adjusted for early intra-uterine deaths.
[7] Significantly different than controls at the p ≤ .05 level.
[8] Only a portion of fetuses in each exposure group were examined for soft tissue alterations.
[9] This skeletal defect was not classified as either a minor skeletal anomalie or a skeletal variant.
[10] Denominator (i.e. th e number of animals at risk) is adjusted for all intra-uterine deaths.

A significant excess of late intra-uterine deaths occurred in the 250 ppm group using both the fetus and the litter measures of response, but when combined with early intra-uterine deaths (i.e. all intra-uterine deaths) the effect is significant for the 250 ppm group in fetuses only. Early intra-uterine deaths considered separately were not found to be related to exposure.

Most of the minor skeletal defects which occurred at a significantly elevated rate were also in the 250 ppm group. The effects which are significant using both measures of response were partially ossified frontals, partially ossified parietals, partially ossified interparietals, odontoid not ossified, third, fourth, fifth, sixth, and seventh cervical centra not ossified, eighth, ninth, tenth, eleventh, twelfth, and thirteenth thoracic centra partially ossified, first lumbar centrum partially ossified, fourth right lumbar traverse process partially ossified, and first and second sternebrae partially ossified. One minor skeletal defect, fourth right lumbar traverse process partially ossified, was significant for fetuses in the 250 ppm group but not for litters.

Two minor skeletal defects were significant for the 50 ppm group using both measures of response: third cervical centrum not ossified and fifth cervical centrum not ossified. The minor skeletal defects of unossified sixth cervical centrum and partially ossified second sternebra shows a significant excess in this exposure group but only for fetuses. The incidence of unossified fourth cervical centrum was significantly elevated over controls in the 50 ppm group for litters but not for fetuses.

Two minor skeletal defects showed a significant deficit of occurrence in the 10 ppm group. Using both the fetus and the litter measure of response, study results show that fetal rats exposed to 10 ppm of 2–EE were significantly less likely to experience partially ossified parietals or partially ossified interparietals than were controls. The study authors offer no explanation for this, but given the large number of effects for which each fetus was examined, the statistical significance of this deficit can easily be attributed to chance variation.

A number of skeletal variants were observed to be associated with exposure in fetal rats. Those which were found to be statistically significantly elevated over controls using both the fetus and the litter measures of response, bipartite first sternebra, unossified first cervical centrum, and extra (14th) rib—bilateral short, were found only in the 250 ppm group. Interestingly, incidence of unossified first and second cervical centra were also significantly elevated in the 10 ppm group and the 50 ppm group when measured in fetuses but not when measured in litters. The fetus/litter measure shows a dose-related trend for ossified first cervical centrum but not for unossified second cervical centrum. The effect extra (14th) rib—bilateral short showed a significant excess in 50 ppm fetuses but not in 50 ppm litters.

There were an additional number of skeletal variants which were statistically significant in the 250 ppm group but only when response was measured in fetuses. These effects were partially ossified sixth sternebra, misaligned fifth sternebra, partially ossified occipital and extra (14th) rib—unilateral (left) short, and although these effects were not significant when measured in litters, when measured in fetuses these effects were significant at the P=0.035 level or lower.

Three minor external and visceral defects were found to be statistically significant. Renal pelvic dilation occurred at a significantly elevated rate in fetuses and in litters in the 250 ppm group. Incidence of hydroureter was significantly reduced in the 50 ppm fetuses but in no other group of fetuses and in no group of litters. Incidence of limb malrotation was significantly elevated in the 10 ppm group of fetuses but in other group of fetuses and in no groups of litters.

There were two skeletal defects which occurred at a statistically signficant rate in the 250 ppm group which were not classified. "Pelvic girdle moved posteriorly (27 pre-sacral vertebrae)" was not categorized as either a major or minor skeletal defect or as a variant. This effect was significant in both fetuses and litters. Likewise, "both calcaneum not ossified" was not classified as either a major or minor skeletal defect or as a variant. This effect was significant only in fetuses in the 250 ppm group.

The incidence of developmental effects in fetal rabbits exposed to 2-EE are presented in Table VI-E. As for fetal rats, three measures of response are presented, and the same statistical criteria were used for inclusion of an effect in the table.

TABLE VI-E.—INCIDENCE OF DEVELOPMENTAL EFFECTS OBSERVED IN DUTCH RABBITS EXPOSED TO 2-EE DAYS 6 THROUGH 18 OF GESTATION [1]

	Control	10 ppm	50 ppm	175 ppm
Minor Skeletal Defects [2]				
Skull—partially ossified hyoid:				
Fetus [3]	15/136	[4] 32/138	12/96	[5] 28/134
Litters [6]	8/21	9/20	5/16	11/22
Fetus/litter [7]	1.88	3.56	2.40	2.55
27 pre-sacral vertebrae:				
Fetus	3/136	7/138	5/96	[4] 31/134
Litters	3/21	4/20	2/16	[5] 10/22
Fetus/litter	1.00	1.75	2.50	3.10
6th sternebra partially ossified:				
Fetus	2/136	1/138	2/96	8/134
Litters	2/21	1/20	2/16	6/22
Fetus/litter	1.00	1.00	1.00	1.33
5th sternebra not ossified:				
Fetus	9/136	[5] 20/138	9/96	13/134
Litters	5/21	7/20	6/16	5/22
Fetus/litter	1.80	2.86	1.00	2.00
Pelvic girdle—pubes not ossified:				
Fetus	0/136	1/138	1/96	[5] 7/134
Litters	0/21	1/20	1/16	4/22
Fetus/litter	0.00	1.00	1.00	1.75
Skeletal Variants				
Extra (13th) rib—unilateral short:				
Fetus	3/136	7/138	7/96	[4] 15/134
Litters	3/21	6/20	7/16	[5] 10/22
Fetus/litter	1.00	1.17	1.00	1.50
Extra (13th) rib—bilateral normal:				
Fetus	10/136	17/138	7/96	[4] 38/134
Litters	5/21	7/20	3/16	[5] 13/22
Fetus/litter	2.00	2.43	2.33	2.92
Extra (13th) rib—bilateral one normal, one short:				
Fetus	4/136	5/138	6/96	[4] 16/134
Litters	4/21	4/20	4/16	9/22
Fetus/litter	1.00	1.25	1.50	1.78
5th sternebra partially ossified:				
Fetus	53/136	61/138	45/96	53/134
Litters	14/21	[4] 20/20	14/16	18/22
Fetus/litter	3.79	3.05	3.21	2.94

[1] Data from Tinston, Doe et al, Exs. 4-039. See also Ex. 5-071.
[2] Only a portion of fetuses in each exposure group were examined for soft tissue alterations.
[3] Incidence is number of fetuses affected divided by the total number of fetuses.
[4] Significantly different than controls at the $p \leq .01$ level.
[5] Significantly different than controls at the $p \leq .05$ level.
[6] Incidence is number of litters with at least one fetus affected.
[7] Average number of affected fetuses per affected litter.

Only one skeletal defect, 27 pre-sacral vertebrae, which Tinston et al classified as minor in rabbits, was statistically significant in fetuses and litters and this was in the 175 ppm group. Three minor skeletal defects, partially ossified hyoid, partially ossified sixth sternebra, and unossified pubes, were significant in fetuses in the 175 ppm group but not in litters. The defect partially ossified hyoid occurred at a significantly elevated rate in 10 ppm fetuses but was not significant in this group when measured in litters. The same result was seen for the defect unossified fifth sternebra which was significant in fetuses in the 10 ppm group but not in litters and not in any other exposure group.

The 175 ppm group had statistically significant excess of two skeletal variants when measured in fetuses and in litters: extra (13th) rib—unilateral short and extra (13th) rib—bilateral normal. The skeletal variant extra (13th) rib—one normal and one short was significantly elevated in fetuses in the 175 ppm group but was not significant in litters.

One skeletal variant was significantly elevated in the 10 ppm group. This variant was partially ossified fifth sternebra. Incidence was significant only when measured in litters but not when measured in fetuses and was not significant for any other exposure group using any measure of response. Incidence of partially ossified fifth sternebra does not show a dose-related trend using the fetus/litter measure of response, and the study authors attribute the observed excess to coincidence because similar increases in this variant were not observed in the 50 and 175 ppm groups.

4. Derivation of the No Observed Effect Level

a. *2-ME.* In reviewing Table VI-A, VI-B, and VI-C, it is clear that almost all effects which occurred in an exposed group at rates statistically significantly elevated over controls occurred in the highest dose group, the 50 ppm 2-ME dose group, in each species. Only one effect, resorptions, was statistically significant in litters at a dose below 50 ppm, but, as noted by the study authors, the rate of resorptions in exposed rabbits fell well within the range of historical controls. It is apparent from these data that 10 ppm is the no observed effect level (NOEL) in each of the species studied by Hanley et al. despite the varying sensitivity of each of the species to 2-ME.

Still, the question arises as to how the incidence of effects can or should be combined to arrive at a measure of overall response. Intuitively, one would have greater confidence in a NOEL derived from an overall measure of response rather than one derived from specific effects which may be statistically significant due to chance alone.

OSHA proposes that an overall measure of the incidence of developmental effects be arrived at by pooling the incidence of effects which occurred at a statistically significant excess in any exposed group when measured in litters. The Agency has chosen litters as the most appropriate unit of measure for a number of reasons. First, as noted above, it is the pregnant female that is exposed to the test substance, therefore it is her litter which is the affected unit. Because dose is administered to the fetus through the pregnant dam, the dose each fetus receives is unknown and may depend upon the individual sensitivity of the mother animal to the test substance. Furthermore, the dose the fetus does receive may be affected by the number of littermates *in utereo.*

Another reason for preferring the litter as the unit of measure is that fetuses in a litter are more likely to respond like each other than like fetuses from other litter (i.e. the litter effect). Therefore, if an effect is observed in some number of fetuses, but all affected fetuses come from only one or two litters, then it is possible to attribute the effect to exposure when in fact it is due to variation among the mother animals.

The use of litters as the unit of measure in studies of developmental effects in animals is recommended by the EPA in its Guidelines (Ex. 5-153), and this unit of measure enjoys wide support in the literature (see, for example, Ex. 5-018).

OSHA's decision to include in an overall measure of response only those effects which are statistically significant when considered individually is based on its belief that by so restricting inclusion of an effect in an overall measure one obtains a more accurate measure of overall response. Inclusion of effects which are not dose related and are attributable solely to chance dilutes the overall measure of the potency of a developmental toxicant.

This position is easily illustrated. Hanley et al counted all the rabbit litters in the control and exposed groups which had at least one fetus with any major malformation. The incidence of major malformations was found to be 6/23 in controls (26%), 4/23 in the 3 ppm group (17%), 3/24 in the 10 ppm group (13%) and 20/22 in the 50 ppm group (91%). If only those major malformations which were statistically significant in exposed litters had been included, the overall incidence of major malformations would have been 0/23 in the control group (0%), 2/23 in the 3 ppm group (13%), 1/24 in the 10 ppm group (4%) and 20/22 in the 50 ppm group (91%). While the NOEL is 10 ppm regardless of how the overall incidence of major malformations is measured, the effect attributable to exposure at 50 ppm is clearer and starker when those major malformations attributable to chance are excluded.

Tables VI-F, VI-G, and VI-H present the overall incidence of developmental effects in rats, rabbits, and mice, respectively. For rabbits, resorptions were not included in the overall measure of response because the rate for all three exposure groups (42% to 67%) was well within the historical range reported by Hanley et al. (mean 55%, range 38% to 74%) and only the rate of resorption among controls (22%) was outside of that range. The tables clearly indicate that 2-ME induces developmental effects in all three species at 50 ppm and that the NOEL for all three species in these studies is 10 ppm.

TABLE VI-F.—OVERALL INCIDENCE OF DEVELOPMENTAL EFFECTS OBSERVED IN LITTERS OF FISHER 344 RATS EXPOSED TO 2-ME DAYS 6 THROUGH 15 OF GESTATION [1]

	Control	3 ppm	10 ppm	50 ppm
Minor skeletal alterations [2]:				
Litters	14/29	12/28	16/28	[3] 27/30

[1] Data from Hanley *et al,* Ex. 4-042a.
[2] The numerator is the number of litters with at least one fetus presenting either delayed ossification of centra or rib spurs; the denominator is the number of litters at risk.
[3] Significantly different than controls at the p≤.01 level.

TABLE VI-G.—OVERALL INCIDENCE OF DEVELOPMENTAL EFFECTS OBSERVED IN LITTERS OF NEW ZEALAND WHITE RABBITS EXPOSED TO 2-ME DAYS 6 THROUGH 15 OF GESTATION [1]

	Control	3 ppm	10 ppm	50 ppm
Major external alterations: [2]				
Litters	0/23	1/23	0/24	[3] 16/22
Minor external alterations: [4]				
Litters	0/23	0/23	0/24	[3] 15/22
Major soft tissue alterations: [5]				
Litters	0/23	1/23	1/24	[3] 20/22
Minor soft tissue alterations: [6]				
Litters	3/23	5/23	2/22	[3] 18/22
Major skeletal alterations: [7]				
Litters	0/23	0/23	0/24	[8] 5/22

TABLE VI–G.—OVERALL INCIDENCE OF DEVELOPMENTAL EFFECTS OBSERVED IN LITTERS OF NEW ZEALAND WHITE RABBITS EXPOSED TO 2–ME DAYS 6 THROUGH 15 OF GESTATION [1]—Continued

	Control	3 ppm	10 ppm	50 ppm
Minor skeletal alterations:[9]				
Litters	1/23	4/23	2/24	[3] 13/22
Any major alterations:[10]				
Litters	0/23	2/23	1/24	[3] 20/22
Any minor alterations:[11]				
Litters	4/23	7/23	4/24	[3] 20/22
Any alterations:[12]				
Litters	4/23	7/23	5/24	[3] 20/22

[1] Data from Hanley *et al*, Ex. 4–042a.
[2] The numerator is the number of litters with at least one fetus presenting any of the following major external alterations: arthrogryposis, anonychia, brachydactyly, ectrodactyly, or kinky tail; the denominator is the number of litters at risk.
[3] Significantly different than controls at the $p \leq .01$ level.
[4] The numerator is the number of litters with at least one fetus presenting any of the following minor external alterations: misalignment of the palatine rugae or narrowed tip of tail; the denominator is the number of litters at risk.
[5] The numerator is the number of litters with at least one fetus presenting any of the following major soft tissue alterations: coarctation of the aortic arch, ventricular septal defect, hypoplastic spleen, or dilated renal pelvis; the denominator is the number of litters at risk.
[6] The numerator is the number of litters with at least one fetus presenting any of the following minor soft tissue alterations: patent ductus arteriosis, hypoplastic gall bladder, pale spleen, dilated ureter, convoluted ureter, or parovarian cyst; the denominator is the number of litters at risk.
[7] The numerator is the number of litters with at least one fetus presenting any of the following major skeletal alterations: missing phalange or missing metatarsal; the denominator is the number of litters at risk.
[8] Significantly different than controls at the $p \leq .05$ level.
[9] The numerator is the number of litters with at least one fetus presenting any of the following minor skeletal alterations: delayed ossification of the hyoid, delayed ossification of the tarsal, or extra lumbar ribs; the denominator is the number of litters at risk.
[10] The numerator is the number of litters with at least one fetus presenting any major external alterations, any major soft tissue alteration or any major skeletal alterations listed above; the denominator is the number of litters at risk.
[11] The numerator is the number of litters with at least one fetus presenting any minor external alterations, any minor soft tissue alteration or any minor skeletal alterations listed above; the denominator is the number of litters at risk.
[12] The numerator is the number of litters with at least one fetus presenting any major or minor external alterations, soft tissue alteration or skeletal alterations listed above; the denominator is the number of litters at risk.

TABLE VI–H.—OVERALL INCIDENCE OF DEVELOPMENTAL EFFECTS OBSERVED IN LITTERS OF CF–1 MICE EXPOSED TO 2–ME DAYS 6 THROUGH 15 OF GESTATION [1]

	Control	10 ppm	50 ppm
Minor skeletal alterations:[2]			
Litters	14/26	14/23	[3] 21/24

[1] Data from Hanley *et al.*, Ex. 4–106.
[2] The numerator is the number of litters with at least one fetus presenting extra lumbar ribs; the denominator is the number of litters at risk.
[3] Significantly different than controls at the $p \leq .05$ level.

In its comments to OSHA's ANPR, Du Pont states that it is "appropriate to look at all adverse effects, but not to accumulate these effects into one endpoint" (Ex. 7–28). OSHA seeks additional information on how the approach suggested by Du Pont could be used for quantitative risk assessment. Specifically, it is unclear how different NOELs for different endpoints from the same study would be treated. In addition, OSHA seeks comment on whether adverse developmental effects should be combined, and if so, how this should be done.

Given that the NOEL for 2–ME has been derived from animal studies, OSHA believes that an uncertainty factor of 100 is appropriate for derivation of the acceptable daily intake (ADI) i.e. the dose at which humans are unlikely to exhibit effects similar to those observed in animals. An uncertainty factor of 100 provides a factor of 10 for interspecies variability and a factor of 10 for intra-species variability (i.e. individual human sensitivity to 2–ME). Therefore, based on the studies of Hanley et al., OSHA estimates the ADI to be 10 ppm/100 or 0.1 ppm. That is, at 0.1 ppm of 2–ME, humans are unlikely to exhibit effects similar to those observed in animals.

b. *2–EE.* Table VI–D and VI–E show clearly that exposure to 2–EE had an effect on developing animals although the results of the 2–EE bioassay are not as strong as those from the 2–ME bioassay. While most of the developmental effects observed in the 2–EE bioassay were observed in the high dose groups for both rats and rabbits (250 ppm and 175 ppm respectively), there were statistically significant effects in the 50 ppm group of rats and the 10 ppm group of rabbits. Thus, determination of the NOEL for 2–EE is more difficult than for 2–ME.

Table VI–I presents the overall incidence of developmental effects in fetal rats exposed to 2–EE. Only those effects which were statistically significant when measured in litters are included in the overall measure of incidence.

TABLE VI–I.—OVERALL INCIDENCE OF DEVELOPMENTAL EFFECTS OBSERVED IN LITTERS OF WISTAR RATS EXPOSED TO 2—EE DAYS 6 THROUGH 15 OF GESTATION [1]

	Control	10 ppm	50 ppm	250 ppm
Late intra-uterine deaths: [2]				
Litters	2/23	2/24	2/22	[3] 7/21
Minor skeletal defects: [4]				
Litters	17/23	21/24	20/22	[3] 21/21
Skeletal variants: [5]				
Litters	20/23	23/24	22/22	21/21
Minor external and visceral defects: [6]				
Litters	12/23	14/24	12/22	[3] 18/21
Unclassified defect: [7]				
Litters	1/23	2/24	2/22	[3] 7/21
Any death, defect or variant: [8]				
Litters	23/23	23/24	22/22	21/21

[1] Data from Tinston, Doe *et al*, Ex. 4–038a.
[2] The numerator is the number of litters with at least one late intra-uterine death; the denominator is the number of litters at risk.
[3] Significantly different than controls at the $p \leq .05$ level.
[4] The numerator is the number of litters with at least one fetus presenting any of the following minor skeletal defects: frontal partially ossified, parietal partially ossified, interparietal partially ossified, odontoid not ossified, third, fourth, fifth, sixth or seventh cervical centrum not ossified, eight, ninth, tenth, twelfth, or thirteenth thoracic centrum partially ossified, first lumbar centrum partially ossified, fourth right lumbar traverse process partially ossified, or first or second sternebra partially ossified; the denominator is the number of litters at risk.
[5] The numerator is the number of litters with at least one fetus presenting any of the following skeletal variants: first sternebra bipartite, first or second cervical centrum not ossified, or extra (14th) rib bilaterally short; the denominator is the number of litters at risk.
[6] The numerator is the number of litters with at least one fetus presenting renal pelvic dilation; the denominator is the number of litters at risk.
[7] The numerator is the number of litters with at least one fetus presenting a posteriorly moved pelvic girdle (27 pre-sacral vertebrae); the denominator is the number of litters at risk. The defect "pelvic girdle moved posteriorly" was not classified as a major or minor external and visceral defect, a major or minor skeletal defect, or a skeletal defect. Thus it is "unclassified."
[8] The numerator is the number of litters with at least one fetus dying late *in utero* or presenting any minor skeletal defect, skeletal variant, minor external or visceral defect, or unclassified defect listed above; the denominator is the number of litters at risk.

The surprising result in table VI–I is that when all the effects are combined, it would appear the 2–EE has no effect on developing rats despite the fact that there is a significant excess of late intra-uterine deaths in the 250 ppm group, a significant excess of minor skeletal defects in the 250 ppm group, and a significant excess of external and visceral defects in the 250 ppm group. Furthermore, Table VI–D shows that there were twenty-four effects that were significantly elevated in the 250 ppm group in both litters and fetuses.

The reason the overall incidence of effects in fetal rats exposed to 2–EE is not significant is that the study authors looked at the developmental effects in such minute detail. While this results in there being a large number of effects which are statistically significant in the 250 ppm group when each effect is considered individually, when combined the incidence of these effects in the other exposure groups dilutes the association between dose and response.

Examination of the data reveals that the incidence of non-ossification of the cervical centra is one effect which is diluting the overall dose-response relationship. When ossification of each of the seven cervical centra is considered individually, it is clear that exposure to 250 ppm of 2–EE in fetal rats results in non-ossification of each of the centrum. Incidence of non-ossification of each of the centrum in the 250 ppm group is statistically significant at the p=.014 level or lower. If all the centra were combined into a category "delayed ossification of the cervical centra", however, this effect would not be statistically significant when measured in litters. The litter incidence of delayed ossification of any cervical centrum is 19/23 in control (83%), 23/24 in the 10 ppm group (96%), 21/22 in the 50 ppm group (95%), and 21/21 in the 250 ppm group (100%). Thus, when each centrum is considered individually, there is clearly a dose-related effect at the 250 ppm level, but when the centra are considered together, this effect disappears. Because of the high background incidence of the effect and the small number of litters in each group, the overall incidence of developmental effects in the 250 ppm group appears to be unrelated to dose.

OSHA does not believe that there is no developmental effect on fetal rats exposed to 2–EE. When the incidence of late intra-uterine deaths is considered, when the overall incidence of minor skeletal defects is considered and when the overall incidence of minor external and visceral defects are considered, it is clear that exposure to 250 ppm of 2–EE results in detrimental effects on the developing fetus. No such effect is seen at 50 ppm or lower, and therefore OSHA concludes that the NOEL for 2–EE is 50 ppm in rats.

The results presented in Table VI–J demonstrate that 50 ppm is also the NOEL for fetal rabbits exposed to 2–EE. The overall incidence of developmental effects is statistically significant for the 175 ppm group at the p=0.004 level. This indicates that exposure below the 250 ppm level, the level observed to have an adverse effect on developing rats, can have an adverse effect on developing rabbits. Although fewer effects were observed in the rabbit at 175 ppm than in the rat at 250 ppm, dose-related adverse effects were nonetheless induced at the 175 ppm level.

TABLE VI–J.—OVERALL INCIDENCE OF DEVELOPMENTAL EFFECTS OBSERVED IN LITTERS OF DUTCH RABBITS EXPOSED TO 2–EE DAYS 6 THROUGH 18 OF GESTATION [1]

	Control	10 ppm	50 ppm	175 ppm
Minor skeletal defects: [2]				
Litters	3/21	4/20	2/16	[3] 10/22

TABLE VI–J.—OVERALL INCIDENCE OF DEVELOPMENTAL EFFECTS OBSERVED IN LITTERS OF DUTCH RABBITS EXPOSED TO 2–EE DAYS 6 THROUGH 18 OF GESTATION [1]—Continued

	Control	10 ppm	50 ppm	175 ppm
Skeletal variants:[4]				
Litters	7/21	10/20	9/16	[5] 18/22
Any defect or variant:[6]				
Litters	8/21	11/20	9/16	[5] 18/22

[1] Data from Tinston, Doe *et al*, Ex. 4–039a.
[2] The numerator is the number of litters with at least one fetus presenting 27 pre-sacral vertebrae; the denominator is the number of litters at risk.
[3] Significantly different than controls at the p ≤.05 level.
[4] The numerator is the number of litters with at least one fetus presenting an extra (13th) rib unilaterally short or bilaterally normal; the denominator is the number of litters at risk.
[5] Significantly different than controls at the p ≤.01 level.
[6] The numerator is the number of litters with at least one fetus presenting any minor skeletal defect or skeletal variant listed above; the denominator is the number of litters at risk.

Given, as with 2–ME, that the NOEL for 2–EE has been derived from animal studies, OSHA believes that an uncertainty factor of 100 is again appropriate for derivation of the ADI. As with 2–ME, an uncertainty factor of 100 provides a factor of 10 for inter-species variability and a factor of 10 for intra-species variability. Therefore, based on the studies by Tinston et al, OSHA estimates the ADI to be 50 ppm/100 or 0.5 ppm. That is, at 0.5 ppm of 2–EE, humans are unlikely to exhibit adverse effects similar to those observed in animals.

5. Alternative Uncertainty Factors

As discussed in a previous section, an ADI (i.e. the levels at which humans are unlikely to exhibit effects similar to those observed in humans) is derived by dividing a NOEL by an uncertainty factor. To derive ADIs for glycol ethers, OSHA has used an uncertainty factor of 100; a factor of ten to account for inter-species variability and a factor of 10 to account for intra-species variability. Several of the commentors who responded to OSHA's ANPR for glycol ethers advocated use of a lower uncertainty factor (see, for example, Kodak, Ex. 7–16, and Du Pont, Ex. 7–28). In its comments, CMA argues that an uncertainty factor well below 100 should be used to arrive at new PELs (Ex. 7–17). While CMA presents a number of reasons for its position, OSHA does not find any of its reasons sufficiently compelling to depart from the traditional uncertainty factor for derivation of ADIs across species. What follows here is a brief description of each of the arguments presented by CMA and OSHA's response to these arguments.

To begin, CMA states that lower safety factors are appropriate with high quality animal studies. OSHA agrees that the Hanley et al. studies and the Tinston et al. studies are high quality studies, but the Agency does not see how the quality of these studies reduces either inter-species variability or intra-species variability. Both types of variability are issues in determining a "safe" occupational exposure level from animal data even when such studies are of high quality.

CMA argues that lower safety factors are appropriate when NOELs have been established in more than one species. CMA notes that not only have NOELs been established for a number of species but the NOELs and the observed effects have also been quite similar across species.

While OSHA agrees that one has greater confidence in a NOEL determined in more than one species, the Agency is concerned the CMA has confused the finding of the same NOEL in more than one species with the finding of the same threshold in more than one species. The exposure levels employed by Hanley et al. and by Tinston et al. were almost identical in each of the species tested. In the case of 2–ME, for example, rats and rabbits were exposed at identical exposure levels and mice were exposed to two of the three same levels. Given this similarity of exposure, it is not surprising that the same NOEL was identified in all three species. One cannot conclude from this, however, that the exposure threshold for developmental effects is the same in all three species. Based on the data from the Hanley et al bioassays, for example, one cannot reject a hypothesis that the "true" NOELs might be 40 ppm for mice, 25 ppm for rats, and 10 ppm for rabbits. The exposure levels employed do not allow one to reject this hypothesis, thus one cannot conclude there is no inter-species variability for 2–ME. The same is true for 2–EE. In addition, the small number of animals used in each of these bioassays, (no study used more than 30 animals in each exposure group and most used less), limited the power of these bioassays to detect lower NOELs. For these reasons, OSHA cannot support the use of a lower safety factor on these grounds as advocated by CMA.

In addition, OSHA does not agree that the effects observed across species exposed to the same glycol ethers were quite as similar as CMA maintains. In the case of 2–ME, the only effects observed to occur at a statistically significantly greater rate in the high dose groups of rats and mice were minor skeletal defects. In high dose rabbits, however, the effects were far and away more severe including major external alterations, major soft tissue alterations, and major skeletal alterations. In the case of 2–EE, it is difficult to compare effects across species because of differences in exposure levels used for the high dose group.

CMA's third reason for advocating an uncertainty factor well below 100 is that data on inter-species metabolism and pharmacokinetics can be employed to justify this. As discussed in the Health Effects section of this preamble, the evidence indicates that the four glycol ethers of interest here are most likely metabolized via the alcohol dehydrogenase (ADH) pathway in both animals and humans. Although all species seem to share the same metabolic pathway, however, there is also evidence that the species do not metabolize glycol ethers at the same rate. Groeseneken et al found that the biological half-life of 2–EE in humans was 21 to 24 hours compared to the biological half-life of 8 to 12 hours reported in animals (Exs. 5–112, 5–113, and 5–114). This finding led the study authors to conclude that the metabolites of 2–EE will not be cleared from the urine by the next morning following exposure and accumulation of the metabolites may be expected through repetitive exposures. In a study of 2–EEA in humans, Groesenken et al. found

similar results (Ex. 5–115), and these results were confirmed in study of female silk screen operators exposed to 2–EE and 2–EEA by Veulemans et al (Ex. 5–114). The finding of a longer biological half-life for 2–EE and 2–EEA in humans prompted Veulemans et al to note that "it would certainly warrant extra caution in the extrapolation of experimental data from laboratory animals to man, since comparable accumulation effects apparently are not found in all species." Although 2–EE and 2–EEA are the only glycol ethers which have been studied in humans, these findings raise enough questions about the similarities of the metabolism and pharmacokinetics of glycol ethers across species to deter the Agency from reducing the uncertainty factor used based on the similarity of the pharmacokinetics and metabolism of glycol ethers across species.

CMA's fourth argument is that when dose is expressed in the correct units using the correct cross-species scaling factor, then a lower uncertainty factor can be used. OSHA intends to discuss this issue later in this section in its review of the risk assessment performed by Environ et al. (Ex. 4–016f). The Agency does agree with CMA that uncertainty is reduced when dose is expressed in the correct units, but the Agency is not as confident as CMA regarding what are the correct units.

CMA's final argument for supporting a lower uncertainty factor is that lower uncertainty factors should be used because exposure is occupational. In an appendix to CMA's comments, E.M. Johnson argues that the 10-fold factor for intra-species variability can be reduced when the exposed population is less diverse than the total population as in the case of workers who tend to be healthier and more homogeneous than the general population (Ex. 7–17, appendix A).

OSHA cannot agree with this position for a number of reasons. First of all, while it is plausible that a woman who is a worker may be healthier than a woman who is not a worker, CMA presents no evidence that the "healthy worker effect" is conferred upon the developing fetus. Furthermore, a fetus has two parents who contribute to its genetic identity, and there is no reason to assume that the father of a fetus of a working mother is also a "healthy worker". Finally, although "healthy workers" may constitute a homogeneous population, it does not follow that their offspring will constitute a homogenous population, healthy or otherwise.

Although OSHA's approach of using an uncertainty factor of 100 may appear conservative, OSHA believes that the uncertainties associated with deriving an ADI for occupational exposure to glycol ethers require the use of this factor. Some of the uncertainties stem from the qualitative nature of the uncertainty factor approach as outlined earlier in this risk assessment (e.g. the unlikelihood that an exposure level used in a bioassay will be the "true" threshold, varying susceptibilities across species, etc.). Other uncertainties stem specifically from the data available for assessing the risk from glycol ethers as noted above (e.g. similar exposure levels used across species, possible differences in metabolism and pharmacokinetics across species, etc.). For these reasons, OSHA has used an uncertainty factor of 100. The Agency seeks comment on its choice of uncertainty factor and its justification for this choice. The Agency seeks detailed reasons for either accepting or rejecting the choice of a 100-fold uncertainty factor and any data available to support the position.

D. Assessment of the Reproductive Risk From Exposure to Glycol Ethers

1. Introduction

The Interagency Regulatory Liaison Group, (IRLG), describes reproductive toxicity as dealing with "the effects of toxicants on adult reproductive function and development of the offspring which may be produced by alteration of a wide range of processes in either the female or the male." As noted by the IRLG, these processes include "those associated with the primary and accessory sexual organs and with fertilization, as well as those which impact more indirectly on normal reproductive function; e.g., neuroendocrine control, general physiological and psychological health, and nutrition." The IRLG continues, "[f]ollowing fertilization, processes associated specifically with pregnancy are also vulnerable; e.g., implantation, placental formation and function, conceptal development, and parturation and lactation" (Ex. 5–018).

In its Proposed Guidelines for Assessing Male Reproductive Risk (Ex. 5–123), the EPA identifies a number of measures which may be evaluated to assess the reproductive effects of exposure of males to a potential reproductive toxicant. In animals, these include body weight; weight and histopathology of the testes, epididymides, seminal vesicles, prostate, and pituitary gland; mating ratio and pregnancy ratio; and pregnancy outcomes such as litter size, pre- and post-implantation loss, the ratio of live to dead pups, sex ratios, malformations, birth and postnatal weights, and survival. Supplemental end points of male reproductive toxicity may be identified through sperm and endocrine evaluations. EPA points out that while these measures are useful for evaluating reproductive risk in humans as well as animals, many of these measures such as early fetal loss, reproductive capacity of the offspring, and the invasive measures of reproductive function are not easily observed in humans. The most feasible measures used in studies of reproductive effects in human males are semen evaluations, indirect measures of fertility/infertility, and certain pregnancy outcomes such as fetal loss, birth weight, sex ratio, congenital malformations, postnatal function, and neonatal growth and survival.

The measures recommended by EPA for evaluation to determine reproductive effects in female laboratory animals include capacity to conceive; length of time required for conception; alterations in the onset of puberty; alterations in the reproductive cycle; oocyte toxicity; premature reproductive senescence; weight and histopathology of the ovary, the uterus, and the pituitary gland; and the pregnancy outcomes described for males above. In human females, the feasible measures of reproductive toxicity are the measures of fertility and pregnancy outcomes (Ex. 5–122).

While studies of human populations provide the strongest evidence of the reproductive toxicity of a substance, such studies are usually limited in their ability to detect risk. Like epidemiological studies of cancer mortality and other discrete outcomes, studies of reproductive toxicity in human populations often suffer from lack of statistical power (usually due to small sample size), inexact exposure measurements, and an inability to control for all potential confounding factors. Studies of reproductive toxicity in human populations, however, have additional limitations. Assessment of reproductive endpoints is often dependent upon voluntary participation and self-reporting of outcomes which, in turn, may be influenced by privacy considerations and religious considerations. In addition, there are fewer endpoints which may be feasibly measured in humans than may be measured in laboratory animals. Thus, because of these limitations, reproductive risks are usually assessed from animal studies.

2. 2–ME

A number of studies showing reproductive effects in male animals exposed to 2–ME are described in the

Health Effects section of this preamble. Results from studies of animals exposed to 2–ME through inhalation are supported by the results from studies of animals exposed to 2–ME through ingestion.

The lowest NOEL observed in laboratory animals was observed in a study of New Zeland white rabbits by Miller et al of the Dow Chemical Company (Exs. 4–045 and 5–023). Groups of five male rabbits were exposed to 2–ME at concentrations of 30, 100, or 300 ppm through inhalation for 6 hours per day, 5 days per week, for 13 weeks. A group of 5 male rabbits served as controls. Food and water was provided to the animals *ad libitum* except during periods of exposure when neither was available.

Following 13 weeks of exposure, all surviving animals were sacrificed. Two rabbits in the 300 ppm group died during the exposure phase of the study. The cause of death for one was bronchopneumonia. The cause of death for the second was unknown. All animals were given a complete gross pathological exam, and a histological exam was performed on selected tissues from each animal.

Reduced testes weight was observed in rabbits in the 300 ppm and 100 ppm exposure groups, and although this effect was statistically significant for the 300 ppm group only, the study authors attributed the observation in both groups to exposure. Gross pathological exam showed that all of the rabbits in the 300 ppm group had very small and flaccid testes. A slight to moderate decrease in testes size relative to the control animals was observed in 4 out of 5 of the rabbits in the 100 ppm group ($p=0.024$, Fisher's Exact Test), and 2 out of 5 of the rabbits in the 30 ppm, group ($p > 0.05$). Histopathologic exam confirmed the gross pathological observations. A dose-related increase in both the incidence and severity of testicular degenerative changes was seen in the test animals. In all three of the rabbits on the 300 ppm group, which survived through the end of the study, the degeneration was diffuse and severe with virtually every tubule affected. In the three rabbits with testicular degeneration in the 100 ppm group, more of a spectrum of effects was noted in that within the same testes, some tubules were relatively normal in appearance while others contained no germinal elements at all. In the 30 ppm group, the microscopic degenerative changes were apparent in the testes of only one of the two rabbits observed to have decreased testes size in the gross pathological exam. The microscopic degenerative changes observed in this animal were an excess of tubules in which the germinal epithelium was thinner than normal, with a complete complement of germinal stages but very few spermatozoa.

Histopathologic exam of the epididymis found that the epididymal sperm content generally reflected the degree of testicular damage with noticeable decreases in those cases which were moderately to severely affected. Degenerating spermatic elements were commonly observed, but secondary changes in accessory sex glands were not seen.

Despite the small number of animals in each exposure group, a significant dose-related effect was observed. Based upon the outcome of decreased testes size, one of the outcomes identified by EPA as an adverse reproductive outcome, the NOEL for reproductive effects of 2–ME in rabbits is 30 ppm.

Given that the NOEL for reproductive effects from 2–ME has been derived from animal studies, OSHA believes that an uncertainty factor of 100 is appropriate for derivation of the ADI as was the case for the assessment of developmental risks from exposure to 2–ME. Here again, an uncertainty factor of 100 provides a factor of 10 for inter-species variability and a factor of 10 for intra-species variability. Therefore, based upon this study Miller et al, the ADI for 2–ME would be 30/100 or 0.3 ppm on the basis of reproductive risks. The ADI for 2–ME based on developmental risks is 0.1 ppm, somewhat lower than the ADI based on reproductive risks but the two ADIs are very close. Thus an ADI, of 0.1 ppm would cover both reproductive and developmental effects, i.e. at this level humans are unlikely to exhibit adverse effects (both reproductive and developmental) similar to those observed in animals.

3. 2–EE

There are fewer studies of the reproductive effects of 2–EE in the literature than there are of 2–ME, but like 2–ME, 2–EE has been found to induce adverse reproductive effects in laboratory animals.

This was the finding of Terrill et al who conducted a study for the Chemical Manufacturers Association exposing rabbits to 2–EE (Exs. 4–108 and 5–084). Groups of ten male New Zealand white rabbits were exposed to 2–EE at concentrations of 25, 100, and 400 ppm through inhalation for 6 hours per day, 5 days per week, for 13 weeks. A group of ten male rabbits served as controls. Food and water was provided to the animals *ad libitum* except during periods of exposure when neither was available.

All animals survived the exposure phase of the study. At terminal sacrifice, all animals were given a complete gross post mortem exam. Animals in the control and high dose groups were given a complete histopathological exam, but for the low and middle dose groups, only the bone marrow, the testes with epididymis, the kidneys, the liver, the lymph nodes, the spleen, the thymus, and any observed gross lesion or tissue mass were examined.

In the 400 ppm group, there was a statistically significant decrease in absolute testes weight and in testes weight relative to body weight. Gross postmortem examination revealed that in three of the ten rabbits from this group, there was slight focal tubule degeneration. Based upon decreased testes weight, the NOEL for reproductive effects for 2–EE in rabbits is 100 ppm.

Although there are fewer animal studies of the reproductive effects of exposure to 2–EE than 2–ME, the results of the animal studies are supported by observation in human populations. In a study of male workers at Precision Castparts Corporation, NIOSH reported significantly reduced sperm count among workers exposed to 2–EE compared to workers with no such exposure (Ex. 5–003). Welch et al also found reduced sperm in a group of shipyard painters exposed to 2–EE, but these workers were also exposed to 2–ME, so it is impossible to determine whether the effect was due to 2–EE, 2–ME, or both glycol ethers (Ex. 5–104). These studies are discussed in greater detail in the Health Effects Section of this preamble.

Applying an uncertainty factor of 100 to the NOEL of 100 ppm reported by Terrill et al in their study of New Zealand white rabbits, one would arrive at an ADI of 100/100 or 1 ppm for 2–EE based on reproductive risk. Here again, however, the ADI must be based on developmental risks as well as reproductive risks. The ADI for 2–EE based on developmental risks is 0.5 ppm, lower than the ADI based reproductive risks. As is the case for 2–ME, for 2–EE the ADI based on reproductive risks is very close to the ADI based on developmental risks. At an ADI of 0.5ppm 2–EE humans are unlikely to exhibit effects (both reproductive and developmental) similar to those observed in animals.

E. Assessment of Risk From Exposure to Glycol Ether Acetates

The acetates of 2–ME and 2–EE, 2–MEA and 2–EEA, have not been studied

as extensively as have the parent compounds. As noted in the Health Effects section of this preamble, however, the acetates have been shown to induce adverse reproductive, developmental, and hematological effects in animals similar to those induced by 2–ME and 2–EE. Furthermore, as discussed in the Health Effects section, it has been shown that 2–MEA and 2–EEA are metabolized to the same acetic acids, methoxyacetic acid (MAA) and ethoxyacetic acid (EEA) respectively, by the same mediated pathway, an alcohol dehydrogenase (ADH) mediated pathway, as their parent compounds.

Because of the similarity in induced effects between the acetates and their parent compounds and because of the similarity in metabolism between the acetates and their parent compounds, OSHA proposes that the ADIs derived for the acetates be the same as for their parent compounds. That is, the ADI for 2–MEA is 0.1 ppm and the ADI for 2–EEA is 0.5 ppm.

There is some experimental evidence to support OSHA's proposal. As reproductive toxicants, the acetates have been shown not only to induce similar effects as their parent compounds, but also to induce these effects at equivalent doses. Nagano et al. found that male mice exposed orally to 2–MEA at 500 mg/kg of body weight experienced significant decreases in testicular weight. When this dose was converted to mmole/kg, the authors found that on an equimolar basis, exposure to 2–ME and 2–MEA resulted in similar effects (Ex. 4–135). Likewise, these authors found that on an equimolar basis, male mice exposed to 2–EE and male mice exposed to 2–EEA experienced similar adverse reproductive outcomes (Ex. 4–135).

The acetate 2–MEA has not been tested for its potential to adversely affect reproductive outcomes. Only limited data exist on 2–MEA, according to CMA, because of the small production volume of this acetate (Ex. 7–17). Nonetheless, CMA argues that although detailed evaluation of the developmental toxicity of 2–MEA has not been conducted as it has for 2–ME, "the NOELs determined for 2–ME can be reasonably employed for assessing this compound. The likelihood that any effect it may cause would occur through human metabolism of 2–MEA to 2–ME and then to the active metabolite makes it reasonable to employ the NOELs for 2–ME to protect humans against effects of 2–MEA" (Ex. 7–17). OSHA concurs with CMA's position.

Unlike 2–MEA, 2–EEA has been tested to determine its potential as a developmental toxicant. Nelson et al. reported a statistically significant excess of developmental effects in rats exposed to 2–EEA at levels as low as 130 ppm (Ex. 5–091). This level was the lowest exposure level used in this bioassay; therefore no NOEL was established for this study. Doe et al. exposed pregnant Dutch rabbits to 0, 25, 100, or 400 ppm of 2–EEA, and the fetuses of rabbits exposed to levels as low as 100 ppm showed a dose-related increase in skeletal defects (Ex. 5–071). Tyl et al. exposed pregnant Fischer 344 rats and pregnant New Zealand white rabbits to 0, 50, 100, 200, or 300 ppm of 2–EEA (Ex. 5–124). Here again, 100 ppm was the LOEL for developmental effects in both species. This level, 100 ppm, is OSHA's current PEL for 2–EEA. Fifty ppm was established to be the NOEL for both the rats and the rabbits. Because Doe et al. and Tyl et al. established the same LOEL in two separate studies and in two different species, it is reasonable to use the NOEL from the Tyl et al. study, 50 ppm of 2–EEA, as the NOEL for calculating the ADI. As with the parent compounds, an uncertainty factor of 100 is appropriate, and this would lead to an ADI of 50 ppm/100 or 0.5 ppm. That is, at an ADI of 0.5 ppm 2–EEA, humans are unlikely to exhibit effects similar to those observed in animals.

OSHA's proposal for deriving ADIs for the acetates at the same level as those for the parent compound also has support from a number of commentors who responded to OSHA's ANPR. For example, NIOSH wrote that a separate PEL for each of the acetates and their parent compounds "should not be necessary because of the similarities in the adverse effects, the similarity in route of exposure, and the fact that in many situations, several of the ethers and their acetates are used simultaneously" (Ex. 7–22). Similarly, Du Pont noted that "2-methoxyethanol (2–ME) and its acetate (2–MEA) and the [sic] 2-ethoxyethanol (2–EE) and its acetate (2–EEA) could be regulated together because the toxic effects of these glycol ethers and their respective acetates are the same" (Ex. 7–28), and Kodak proposed the same PELs for 2–ME and 2–MEA and for 2–EE and for 2–EEA, (Ex. 7–23), although the levels proposed are different than those proposed by OSHA. OSHA seeks comment on this approach to deriving ADIs for the glycol ether acetates.

F. Other Approaches to the Assessment of Risk for Glycol Ethers

1. The Crump Risk Assessment

Under contract to OSHA, K.S. Crump and Company performed a risk assessment for developmental and reproductive effects from exposure to 2–ME, 2–EE, and their acetates (Ex. 5–136). The data used for this analysis were from the studies of developmental effects of exposure to 2–ME by Hanley et al. (Exs. 4–042a and 4–106) and to 2–EE by Tinston, Doe et al. (Exs. 4–038 and 4–039; see also Ex. 5–071) and the studies or reproductive effects of exposure to 2–ME by Miller et al. (Ex. 5–057) and to 2–EE by Terrill et al. (Exs. 4–108 and 5–084). At the time Crump performed its analysis, no data were available on the developmental effects of 2–EE as measured in litters. Therefore, Crump limited its analysis of the developmental effects of 2–EE exposure to responses observed in fetuses. No analyses were done on data from studies of the acetates. Crump noted that "2–MEA and 2–EEA are believed to be quickly hydrolized to their corresponding glycol ether. Furthermore, evidence suggests that from that point on, their metabolism and distribution proceed in the same manner as the ether. If that is the case, a mole of an ether will yield the same amounts of products as a mole of the corresponding acetate. Moreover, a given air concentration in ppm contains the same number of moles (1 ppm is about 41 micromoles per cubic meter at standard temperature and pressure), for all chemicals. Consequently, in the absence of data on the acetates needed for risk assessment, it is reasonable to assume that the acetates and their corresponding ethers will produce the same risks at equal air concentrations, in ppm" (Ex. 5–136).

The goal of the Crump risk assessment was to develop dose-response models for developmental and reproductive effects. Only brief descriptions of the models and methods used by Crump are presented here, and the reader is referred to the Crump report (Ex. 5–136) for additional details. Two approaches were taken to develop these models for the outcomes of interest. The first of these applied methods similar to those applied to cancer data, but the dose-response models considered were non-linear or incorporated a threshold. Four models employed this approach: The quantal linear regression (QLR) model, the Weibull model, the continuous linear regression (QCR) model, and the continuous power (CP) model. The QLR and Weibull models were used for incidence data measured in fetuses, and

therefore do not take litter size or intra-litter correlation (e.g. the litter effect) into account. The QCR and CP models were used for incidence data measured in litters, and they account for the litter effect but not for litter size. The QLR and QCR models assume at threshold with a linear response above the threshold. The Weibull and CP models are non-threshold models but can be non-linear if indicated by the data.

The second approach taken by Crump was to consider two models recently developed specifically for assessing developmental effects, (these models use only litter data), and to modify these for the analysis of the glycol ethers data. The first of these was developed by Kodell et al. This model uses the beta-binomial distribution to account for the litter effect and takes into account the effect of litter size on the probability of a developmental effect. The second model considered by Crump was originally put forth by Rai and Van Ryzin. This model takes litter size into account but does not account for the litter effect. In its analysis, Crump used two special cases of the Kodell model, the Kodell-QLR model which assumes a threshold but is linear above the threshold, and the Kodell-Weibull model which assumes no threshold but can be non-linear. Only one case of the Rai and Van Ryzin model was considered. This model assumes no threshold and is linear. Crump felt the shortcomings of the Rai and Van Ryzin model made it less appropriate for assessing risk than the other models considered.

Crump applied the models described here only to data on developmental outcomes. The models developed for use with litter data could not be used with the data Crump had on reproductive outcomes because the data Crump had measured these outcomes in individual animals and not litters. Likewise, the models developed for use with litter data could not be used with the data Crump had on developmental outcomes from 2–EE exposure because, as noted above, litter data for these effects were not available to Crump when it did its analysis. The models developed for use with fetal data could have been used with the data on reproductive outcomes, but Crump did not use models to analyze the data on reproductive effects because of the small number of animals used in these bioassays.

Although the goal of the Crump risk assessment was to develop dose-response models for the outcomes of interest, two additional approaches for determining a "safe" level of exposure were considered. The first of these was to calculate a NOEL using a no-statistical-significance-of-trend or NOSTASOT approach. In this approach, tests of statistical hypothesis were conducted to determine whether the bioassay data provided sufficient statistical evidence to conclude that a dose-related trend existed, (i.e. whether response increased with dose), and if so, to determine the highest dose used in the bioassay such that there was no statistical evidence of a dose-related trend in response at that dose or at lower doses. The highest dose which showed no statistical evidence of a dose-related trend is called the NOSTASOT dose and is considered to be a statistically determined NOEL. This approach was used for both developmental and reproductive outcomes for both 2–ME and 2–EE.

The final approach considered by Crump was calculation of a benchmark dose as an alternative to the NOEL. A benchmark dose is defined as the statistical 95% lower confidence limit on the dose corresponding to a 1% increase in the extra risk. The dose corresponding to a 1% increase in extra risk was estimated using both the QLR model and Weibull model, but only the lower of the two benchmark doses was reported. Crump chose to use only these two models to estimate the benchmark doses because these two models were the only two used to analyze all of the data on adverse reproductive outcomes for both 2–ME and 2–EE.

The NOSTASOT dose and the benchmark dose calculated by Crump are much like the NOELs calculated by OSHA in that neither of these doses alone represents a "safe" level of exposure. Rather, Crump intended an uncertainty factor to be applied to either of these doses, although Crump did not recommend a particular uncertainty factor in his report. Crump argues that either is preferable to a NOEL established using traditional methods because they make use of all of the dose-response data. Crump notes that NOELs "determined by comparing treatment groups individually to the control group * * * have low power because they involve only the animals in two of the treatment groups, when in fact the data from any intermediate doses are also relevant. Thus a common result is that the trend test is significant, but none of the treated groups differ significantly from the control group."

Results of the Crump analysis are presented in Tables VI–K through VI–N. Although the sources of the data used by Crump were the same as those used by OSHA, the adverse outcomes considered and the specific estimates of incidence were different. These data are presented in the Crump report.

Table VI–K shows that for 2–ME, NOELs established using the NOSTASOT approach are identical to those established by OSHA using more traditional methods. For 2–EE, Table VI–L shows that for all but one outcome in rats, total abnormal ribs, Crump's NOSTASOTs are the same as OSHA's NOELs, but for rabbits, Crump's NOELs are lower. This difference is due to the fact that Crump used fetus data for its analysis of 2–EE whereas OSHA used litter data in its analysis to establish the NOEL.

TABLE VI–K.—NOSTASOT AND BENCHMARK DOSES CALCULATED FOR 2–ME DATA SETS [a]

Species	Adverse effect	NOSTASOT [b] exposure (ppm)	Benchmark [c] dose (ppm)
Developmental effects:			
Rats [d]	Delayed ossification of Centra	10	12
	Rib spurs	10	8.5
	Major malformations	10	53
Rabbits [d]	Resorptions	10	2
	Major malformations	10	10
Mice [e]	Resorptions	10	9.3
	Extra lumbar ribs	10	2.5
Reproductive effects:			
Rats [f]	Testicular degeneration	100	[g] N/C
Rabbits [f]	Testicular degeneration	30	N/C

TABLE VI-K.—NOSTASOT AND BENCHMARK DOSES CALCULATED FOR 2-ME DATA SETS[a]—Continued

Species	Adverse effect	NOSTASOT[b] exposure (ppm)	Benchmark[c] dose (ppm)
	Reduced testes size	30	N/C

[a] From the Crump Report, Ex. 5-136.
[b] NOSTASOT=No statistical significance of trend (i.e. the NOSTASOT exposure is the highest dose for which data did not show a statistically significant dose-related trend). See text for details.
[c] Benchmark exposure is the 95% lower limit on doses corresponding to an extra risk of 1%. See text for details.
[d] Data from Hanley et al., Ex. 4-042a.
[e] Data from Hanley et al., Ex. 4-106.
[f] Data from Miller et al., Ex. 4-045.
[g] N/C=Not calculated.

TABLE VI-L.—NOSTASOT AND BENCHMARK DOSES CALCULATED FOR 2-EE DATA SETS[a]

Species and adverse effect	NOSTASOT exposure (ppm)[b]	Benchmark dose (ppm)[c]
Developmental Effects		
Rats:[d]		
Minor skeletal defects	50	15.0
Minor visceral defects	50	46.0
Total abnormal ribs	10	1.8
Late intra-uterine deaths	50	18.0
Rabbits:[e]		
Minor skeletal defects	[f]N/D	3.5
Skeletal variants	10	2.2
Reproductive Effects		
Rabbits:[g]		
Focal tubule degeneration	100	[h]N/C
Weights of testes/epididymis	100	N/C

[a] From the Crump Report, Ex. 5-136.
[b] NOSTASOT = No statistical significance of trend (i.e. the NOSTASOT exposure is the highest dose for which data did not show a statistically significant dose-related trend). See text for details.
[c] Benchmark exposure is the 95% lower limit on doses corresponding to an extra risk of 1%. See text for details.
[d] Data from Tinston et al; Ex. 4-038.
[e] Data from Tinston et al, Ex. 4-039.
[f] Not defined. A significant effect was seen at the lowest dose.
[g] Data from Terrill et al, Ex. 4-108.
[h] N/C = not calculated.

For almost every adverse outcome considered, Tables VI-K and VI-L show that the benchmark dose is lower than the NOEL estimated using the NOSTASOT approach. Here again, this could be due to the fact that benchmark doses were estimates from models which use fetal data rather than litter data. Were benchmark doses to be used to calculate the ADIs, the result would be a more conservative estimate of the exposure below which an adverse outcome is unlikely than the estimates derived by OSHA.

Tables VI-M and VI-N show that despite the differences among the models used by Crump, for the majority of data sets the models predict surprisingly consistent risks. The largest difference in predicted risks are found at low doses between the threshold and non-threshold models. Much less difference can be attributed to whether the models use fetal or litter data. Crump suggests one reason that the shape of the dose-response curve is more important in determining a risk estimate than the type of data used may be the low intra-litter correlation estimated for the 2-ME data sets. Crump explains that "[f]or the rat data, intra-litter correlations, as estimated by the Kodell-QLR or Kodell-Weibull models, did not exceed 0.05 * * *. Somewhat larger correlations were observed in some of the rabbit and mouse data sets (ranging up to about 0.27). Apparently, intra-litter correlations of this magnitude are not sufficient to cause maximum-likelihood estimates derived ignoring the litter effect to be seriously in error."

TABLE VI-M.—ESTIMATES OF NUMBER OF EXTRA CASES OF VARIOUS DEVELOPMENTAL EFFECTS PER 1,000 FETUSES FROM EXPOSURE TO 2-ME[a]

Dose[c]	QLR	Weibull	QCR	CP	Kodell-QLR	Kodell-Weibull	Rin and Van Ryzin
Rats—Delayed ossification of the centra:[b]							
25	33	31	30	27	33	31	25
	(50)	(51)	(47)	(47)	(46)	(270)	.....
5	4	4.1	3.6	3.1	4.1	4.1	3.1
	(10)	(10)	(9.3)	(9.4)	(8.2)	(62)	.....
1	0	0.54	0	0.36	0	0.54	0.57
	(2)	(2.1)	(1.9)	(1.9)	(0.48)	(13)	.....
0.5	0	0.23	0	0.14	0	0.23	0.28
	(1)	(1)	(0.93)	(0.94)	(0)	(6.4)	.....
0.1	0	0.03	0	0.016	0	0.03	0.056
	(0.2)	(0.21)	(0.19)	(0.19)	(0)	(1.3)	.....
0.03	0	0.0066	0	0.0033	0	0.0065	0.017
	(0.061)	(0.062)	(0.056)	(0.057)	(0)	(0.38)	.....
Rats—Rib spurs:[b]							
25	89	75	89	86	97	82.4	89

TABLE VI–M.—ESTIMATES OF NUMBER OF EXTRA CASES OF VARIOUS DEVELOPMENTAL EFFECTS PER 1,000 FETUSES FROM EXPOSURE TO 2–ME[a]—Continued

Dose[c]	QLR	Weibull	QCR	CP	Kodell-QLR	Kodell-Weibull	Rin and Van Ryzin
	(120)	(120)	(150)	(150)	(130)	(132)	.....
5	3.8	5.8	0	7.3	6.7	7.2	16
	(24)	(24)	(30)	(30)	(27)	(28)	.....
1	0	0.43	0	0.62	0	0.61	3
	(4.8)	(4.9)	(6.1)	(6)	(5.6)	(5.6)	.....
0.5	0	0.14	0	0.22	0	0.21	1.5
	(2.4)	(2.5)	(3)	(3)	(2.8)	(2.8)	.....
0.1	0	0.011	0	0.018	0	0.018	0.3
	(0.48)	(0.49)	(0.61)	(0.6)	(0.56)	(0.57)	.....
0.03	0	0.0015	0	0.0029	0	0.0028	0.091
	(0.15)	(0.15)	(0.18)	(0.18)	(0.17)	(0.17)	.....
Rats—Total major malformations:[b]							
25	6.2	6.2	6.5	6.5	5.3	5.4	6.2
	(15)	(15)	(10)	(12)	(13)	(N/P)	.....
5	1.3	1.3	1.3	1.3	0.64	0.97	1.3
	(3.1)	(3.1)	(2)	(2.4)	(2.6)	(N/P)	.....
1	0.25	0.25	0.26	0.26	0	0.18	0.25
	(0.62)	(0.62)	(0.41)	(0.47)	(0.53)	(N/P)	.....
0.5	0.13	0.13	0.13	0.13	0	0.084	0.13
	(0.31)	(0.31)	(0.2)	(0.24)	(0.27)	(N/P)	.....
0.1	0.025	0.025	0.026	0.026	0	0.015	0.025
	(0.062)	(0.062)	(0.041)	(0.047)	(0.053)	(N/P)	.....
0.03	0.0075	0.0075	0.0078	0.0078	0	0.0042	0.0075
	(0.019)	(0.019)	(0.012)	(0.014)	(0.016)	(N/P)	.....
Rabbits—Resorptions:[b]							
25	140	140	150	150	150	150	180
	(190)	(190)	(210)	(210)	(240)	(240)	.....
5	31	31	29	29	33	33	49
	(41)	(41)	(43)	(43)	(53)	(53)	.....
1	6.2	6.2	5.8	5.8	6.7	6.7	10
	(8.3)	(8.3)	(8.6)	(8.6)	(11)	(11)	.....
0.5	3.1	3.1	2.9	2.9	3.3	3.3	5.2
	(4.2)	(4.2)	(4.3)	(4.3)	(5.5)	(5.5)	.....
0.1	0.62	0.62	0.58	0.58	0.67	0.67	1.1
	(0.84)	(0.84)	(0.86)	(0.86)	(1.1)	(1.1)	.....
0.03	0.19	0.19	0.18	0.18	0.2	0.2	0.32
	(0.25)	(0.25)	(0.26)	(0.26)	(0.33)	(0.33)	.....
Rabbits—Total major malformations:[b]							
25	430	2.2	360	1.4	420	36	230
	(490)	(290)	(430)	(220)	(520)	(280)	.....
5	0	0	0	0	0	0.0001	19
	(0)	(5.4)	(0)	(3.5)	(0)	(6.3)	.....
1	0	0	0	0	0	0	3.3
	(0)	(0.088)	(0)	(0.056)	(0)	(0.12)	.....
0.5	0	0	0	0	0	0	1.6
	(0)	(0.015)	(0)	(0.0094)	(0)	(0.022)	.....
0.1	0	0	0	0	0	0	0.31
	(0)	(0.00024)	(0)	(0.00015)	(0)	(0.00042)	.....
0.03	0	0	0	0	0	0	0.094
	(0)	(0.00001)	(0)	(0)	(0)	(0.00002)	.....
Mice—Resorptions:[d]							
25	35	35	45	45	44	44	51
	(65)	(65)	(80)	(80)	(78)	(78)	.....
5	7.1	7.1	8.9	8.9	8.9	8.9	19
	(13)	(13)	(16)	(16)	(16)	(16)	.....
1	1.4	1.4	1.8	1.8	1.8	1.8	4.2
	(2.7)	(2.7)	(3.2)	(3.2)	(3.3)	(3.3)	.....
0.5	0.72	0.72	0.89	0.89	0.89	0.89	2.1
	(1.3)	(1.3)	(1.6)	(1.6)	(1.6)	(1.6)	.....
0.1	0.14	0.14	0.18	0.18	0.18	0.18	0.43
	(0.27)	(0.27)	(0.32)	(0.32)	(0.033)	(0.033)	.....
0.03	0.043	0.043	0.054	0.054	0.053	0.053	0.13
	(0.08)	(0.08)	(0.096)	(0.096)	(0.098)	(0.098)	.....
Mice—Extra lumbar ribs:[d]							
25	140	140	160	160	140	140	140
	(190)	(190)	(240)	(240)	(240)	(240)	.....
5	29	29	31	31	30	30	34
	(41)	(41)	(48)	(48)	(52)	(52)	.....

TABLE VI–M.—ESTIMATES OF NUMBER OF EXTRA CASES OF VARIOUS DEVELOPMENTAL EFFECTS PER 1,000 FETUSES FROM EXPOSURE TO 2–ME[a]—Continued

Dose[c]	QLR	Weibull	QCR	CP	Kodell-QLR	Kodell-Weibull	Rin and Van Ryzin
1	4.2	5.7	6.2	6.2	6.2	6.2	7.2
	(8.4)	(8.4)	(9.6)	(9.5)	(11)	(11)	.....
0.5	1.1	2.8	3.1	3.1	3.1	3.1	3.6
	(4.2)	(4.2)	(4.8)	(4.8)	(5.4)	(5.4)	.....
0.1	0	0.54	0.62	0.62	0.62	0.62	0.73
	(0.84)	(0.84)	(0.96)	(0.95)	(1.1)	(1.1)	.....
0.03	0	0.16	0.19	0.19	0.19	0.19	0.22
	(0.25)	(0.25)	(0.29)	(0.29)	(0.32)	(0.32)	.....

[a] From the Crump Report, Ex. 5–136. The models considered are the quantal linear regression (QLR) model, the Weibull model, the continuous linear regression (QCR) model, the continuous power (CP) model, two cases of the Kodell model—the Kodell-QLR model and the Kodel-Weibull model, and the Rai and Van Ryzin model. The numbers in parentheses are the 95% upper confidence limit on risk. No 95% upper confidence limit was calculated for the Rai and Van Ryzin model. See text for details.
[b] Dose is adjusted by a factor of 8/6. See the Crump report for details.
[c] Data from Hanley et al., Ex. 4–042a.
[d] Data from Hanley et al., Ex. 4–106.

TABLE VI–N.—ESTIMATES OF NUMBER OF EXTRA CASES OF VARIOUS DEVELOPMENTAL EFFECTS PER 1000 FETUS FROM EXPOSURE TO 2–EE[a]

Dose[c]	QLR	Weibull
Rats—Minor skeletal defects:[b]		
5	0	1.8
	(0)	(15)
1	0	0.065
	(0)	(1.4)
0.5	0	0.015
	(0)	(0.51)
0.25	0	0.0037
	(0)	(0.19)
0.1	0	0.00056
	(0)	(0.049)
Rats—Minor visceral defects:[b]		
5	1.4	1.4
	(2.8)	(2.8)
1	0.29	0.29
	(0.56)	(0.56)
0.5	0.14	0.14
	(0.28)	(0.28)
0.25	0.072	0.072
	(0.14)	(0.14)
0.1	0.029	0.029
	(0.056)	(0.056)
Rats—Total abnormal ribs:[b]		
5	37	23
	(45)	(44)
1	7.5	3.7
	(9.1)	(8.9)
0.5	3.8	1.7
	(4.6)	(4.5)
0.25	1.9	0.76
	(2.3)	(2.2)
0.1	0.75	0.27
	(0.91)	(0.9)
Rabbits—Minor skeletal defects:[d]		
5	19	0
	(27)	(21)
1	3.9	0
	(5.5)	(4.3)
0.5	1.9	0
	(2.7)	(2.2)
0.25	0.97	0

TABLE VI–N.—ESTIMATES OF NUMBER OF EXTRA CASES OF VARIOUS DEVELOPMENTAL EFFECTS PER 1000 FETUS FROM EXPOSURE TO 2–EE[a]—Continued

Dose[c]	QLR	Weibull
	(1.4)	(1.1)
0.1	0.39	0
	(0.55)	(0.43)
Rabbits—Skeletal variants:[d]		
5	29	29
	(41)	(41)
1	6	6
	(8.4)	(8.4)
0.5	3	3
	(4.2)	(4.2)
0.25	1.5	1.5
	(2.1)	(2.1)
0.1	0.6	0.6
	(0.84)	(0.84)
Rabbits—Late intrauterine death:[d]		
5	0	0.0035
	(15)	(15)
1	0	0.000022
	(3)	(3)
0.5	0	0.000002
	(1.5)	(1.5)
0.25	0	0
	(0.74)	(0.74)
0.1	0	0
	(0.3)	(0.3)

[a] From the Crump Report, Ex. 5–136. The models considered are the quantal linear regression (QLR) model, the Weibul model, the continuous linear regression (QCR) model, the continuous power (CP) model, two cases of the Kodel model—the Kodel-QLR model and the Kodel-Weibull model, and the Rai and Van Ryzin model. The number in parentheses are the 95% upper confidence limit on risk. No 95% upper confidence limit was calculated for the Rai and Van Ryzin model. See text for details.
[b] Dose is adjusted by a factor of %. See the Crump report for details.
[c] Data from Tinston et al, Ex. 4–038.
[d] Data from Tinston et al, Ex. 4–039.

Crump notes that although the maximum likelihood estimates (MLEs) of risk are similar regardless of whether one accounts for the litter effect, the 95% upper confidence level (UCL) can be noticeably affected. Crump states that for "several data sets for which the maximum likelihood estimates are similar when estimated by the QLR (or Weibull) model and the Kodell-QLR (or Kodell-Weibull) model (e.g. extra lumber ribs in mice, for which the intra-litter correlation estimates are highest), the upper limits are smaller when the litter effect is ignored."

For 2–ME, the models and data sets predict a range of risks of developmental effects from 2.2 to 430 per 1000 fetuses at the current OSHA PEL of 25 ppm. The lowest risk comes from the Weibull model applied to data on total major malformations in rabbits. The highest risk comes from the QLR model applied to these same data. Crump attributes this large spread within the same data set to the non-linearity of the dose-response relationship and "the lack of experimental evidence regarding the dose-response curve between 10 and 50 ppm." Crump concludes that if "there had been an additional experimental exposure between 10 ppm and 50 ppm, the difference among the models would likely have been sharply reduced."

For 2–EE, Crump did not estimate risks at the current OSHA PEL of 200 ppm. The highest dose level which Crump considered for its analysis of 2–EE was 5 ppm. At this exposure level, the models and data sets predict a range of risk of developmental effects from 0 to 37 per 1000 fetuses. The lowest risk comes from the QLR model applied to data on minor skeletal defects in rats. The highest risk comes from the same

model applied to data on total abnormal ribs in rats.

At 0.1 ppm, Table VI–M shows that the predicted risks of developmental effects range from 0 to .67 per 1000 fetuses when derived from models which incorporate thresholds and from approximately zero to 1.1 per 1000 fetuses when derived from models which do not incorporate thresholds. At 0.5 ppm, Table VI–N shows that the predicted risks of developmental effects range from 0 to 3 per 1000 fetuses when derived from the model which incorporates a threshold and from approximately zero to 3 per 1000 fetuses when derived from the model which does not incorporate a threshold.

Although Crump's approach provides methods for quantifying reproductive and developmental risks, none of the methods proposed in the report has been generally accepted within the risk assessment community. The NOEL/uncertainty factor approach, on the other hand, has broad acceptance for the assessment of reproductive and developmental risks. Furthermore, Crump's risk assessment provides no criteria for selecting one model or method over another. Since none of the models has a biological basis, it is impossible to determine which is the most appropriate model to use. Given the broad range of risks predicted from each of the models, some criteria must be developed for choosing one or another before Crump's approach can be used for quantitative risk assessment. For these reasons, OSHA has not relied upon the Crump report as the basis of its quantitative risk assessment for glycol ethers.

Crump's risk assessment raises a number of issues including whether developmental and reproductive risks can be quantified and these issues deserve serious discussion. In addition to proposing dose-response models for quantifying the risk of developmental effects, Crump has proposed two alternatives, the NOSTASOT dose and the benchmark dose, to the traditional NOEL used by OSHA in its risk assessment. OSHA seeks comment on the issues raised in this report as well as on the specific methodology employed by Crump to quantify the risk of adverse reproductive and developmental effects.

2. The Hattis Risk Assessment

In an attempt to quantify the reproductive and developmental risks associated with glycol ethers exposure, Dale Hattis et al developed three quantitative approaches; one for estimating the risks of adverse effects on male fertility (Ex. 5–109); one for estimating the risks of adverse developmental outcomes (Ex. 5–121); and one for estimating the risks of infant mortality (Ex. 5–121). To estimate risks on male fertility, sperm counts and pharmacokinetically-derived exposures from workers exposed to 2–ME and 2–EE were used as a basis for estimating percentage reductions in fertility. Animal studies in which 2–ME and 2–EE induced fetal death and fetal malformations were used as a basis for estimating the risk of adverse developmental outcomes in human fetuses. Animal studies in which 2–ME and 2–EE induced fetal weight reduction were used as a basis for estimating the risk of infant mortality in humans. The following discussion briefly summarizes these approaches. For a more complete description of these analyses and the underlying assumptions, the original studies should be consulted.

a. *Risk Analysis on Male Fertility Effects* (Ex. 5–109). The goal of this analysis was to quantify the effects on male fertility that could be expected from reductions of sperm counts induced by 2–EE and 2–ME. Thus sperm count was the basic measure used to calculate a risk of infertility. The authors acknowledged that sperm counts are not ideal for this purpose because sperm counts are only one of several parameters (e.g. % normal sperm, % motile sperm, and age of patient) that are known to have an effect on male reproductive potential. In addition the authors stated that a direct relationship between sperm count and male fertility performance may be an over simplification. However the authors chose sperm counts because no other type of sperm quality parameters were available in the underlying data used for this quantitative analysis.

The sources of experimental data used in this analysis included (1) a pharmacokinetic model developed by Hattis et al for 2–EE (Ex. 5–095), (2) worker exposure studies on shipyard painters (Exs. 5–101, 5–102 and 5–103) and foundry workers (Ex. 5–003) and (3) a quantitative model developed by Meistrich (Ex. 4–161) for estimating sperm reduction factors and increases in excess infertility.

In their pharmacokinetic analysis (Ex. 5–095), Hattis et al developed four different pharmacokinetic models using clinical data from studies in which human volunteers were exposed to 2–EE. These models described the uptake and metabolism of 2–EE to its primary metabolite ethoxyacetic acid (EAA). The models also described the urinary excretion of EAA. Mathematical formulas derived from these models were presented as a means for calculating 2–EE equivalent air exposure levels from urinary EAA excretion data.

As a first step in the risk analysis, urinary EAA excretion data from the foundry workers and the shipyard painters were converted to 2–EE equivalent air exposures (ppm) using the formulas derived from the Hattis et al pharmacokinetic model. The authors noted that the shipyard painters also had "appreciable" exposures to 2–ME. Thus 2–EE equivalents for these workers were adjusted to account for 2–ME. This was accomplished by assuming that 2–ME was 4.3 times more potent than 2–EE (based on animal studies) and that workers were exposed to 0.8 ppm 2–ME for every 2.6 ppm 2–EE.

In the second step of this analysis, sperm counts were analyzed and found to decline among both sets of workers although neither of the observations from these groups was statistically significant. The percent reduction in sperm count for these groups of workers was then compared to the calculated 2–EE equivalents air levels:

	2–EE equivalent (ppm–8 hr/day)	Overall percent sperm count reduction
Shipyard Painters:		
Arithmetic mean	6.1	27.5
Geometric mean	4.9	
Foundry workers:		
Arithmetic mean	13.9	14
Geometric mean	12.8	

The authors noted that results from both of these studies reinforced one another showing suggestive declines in sperm counts with 2–EE exposure. However these results indicate that there is a stronger sperm reduction effect with lower dose among the shipyard painters. Possible explanations offered by the authors included (1) chance statistical fluctuations in the data and (2) potential peak exposures prior to sampling the population. Nevertheless, the shipyard painter data was selected for the authors "best estimate" risk projections as this study had more complete exposure data and a larger number of workers, making this study "more likely representative of reality".

In the final step in this analysis, work by Meistrich (Ex. 4–161) was applied to sperm count reductions calculated in

the previous steps to estimate an "excess infertility risk". Meistrich developed a method, using testicular toxicity data in rats and analyses of sperm count distributions in "fertile" and "infertile" couples, to calculate the "risk of infertility" as a function of sperm count. In his model Meistrich defined infertility as the degree of subfertility required to bring about a need to consult a physician. Meistrich assumed that a 1% increase in infertility (i.e. 1 in 100 couples) was an "acceptable risk". He also assumed that the background risk of infertility in the general population was 15%. Using these assumptions and definitions, Meistrich estimated that a 1% increase in excess infertility corresponds to a sperm reduction factor of 1.24. Using this basic relationship, Hattis et al. calculated sperm reduction factors and corresponding increases in excess infertility for the sperm count reductions observed among the shipyard painters at various 2–EE equivalent air exposures:

Geometric mean dose (ppm) 8 hr–TWA	Percent sperm count reduction	Reduction factor	Excess infertility (percent)
0.89	5.70	1.06	0.25
1.72	10.80	1.12	0.50
3.28	19.40	1.24	1.00
4.9	27.5	1.38	1.58
5.97	32.40	1.48	2.00

Based on the results of this analysis Hattis concluded that in order to achieve a goal of having no more than 1 in 100 couples (i.e. 1%) suffering "infertility", exposures to 2–EE must be kept below a geometric mean of 3.3 ppm. Achieving a goal of no more than 1 in 400 couples suffering infertility would require exposures ¼ of that level (i.e. 0.82 ppm). Furthermore assuming that 2–ME is 4.3 times more potent than 2–EE, Hattis estimates that a corresponding dose for 2–ME of 0.46 ppm would be required to assure that no more than 1 in 100 couples will suffer from infertility.

These quantitative estimates must be viewed in light of the uncertainties and assumptions used to calculate them. First, both the shipyard painter and foundry worker studies had a small number of exposed workers with sperm count reductions bordering on statistical significance. Furthermore, as noted by Hattis et al, as well as the original authors of the shipyard painter studies, the EAA excretion levels calculated from these may be a poor proxy for exposures associated with sperm count reduction. The EAA excretion levels represented exposure to 2–EE in the last few days whereas the sperm counts which were measured at approximately the same time would have been effected by exposures weeks earlier. Because the shipyard painters changed tasks at the shipyard frequently, EAA excretion levels representing these workers' exposure within the last few days may not adequately represent exposure levels weeks earlier which would have been responsible for the sperm counts collected.

Second, the Meistrich approach for calculating sperm reduction factors assumes a "one-hit" killing function for sperm which may or may not be biologically correct. Furthermore Meistrich uses a very subjective definition of infertility (i.e. degree of subfertility required to bring about the need to consult a physician).

These sources of uncertainty are compounded by the uncertainty of the 2–EE air equivalents which were calculated using the Hattis pharmacokinetic model. This pharmacokinetic model carries with it its own set of assumptions and uncertainties. Thus considerable uncertainty is associated with the quantitative estimates derived from the risk analysis on male fertility.

b. *Risk Analysis on Developmental Effects* (Ex. 5–121). The goal of this analysis was to quantify the risk of adverse developmental effects associated with *in utero* exposure to glycol ethers. Two separate approaches were employed. In the first approach, quantal effects data from animal studies (e.g. fetal death and malformations) were used to estimate the risk of similar adverse effects in humans. In the second approach, continuous effects data from animal studies (e.g. changes in fetal weight) were used to project changes in birth weight and potential changes in infant mortality in humans.

Quantal Effects Analysis. Hattis et al selected six different animal studies examining the developmental toxicity of various glycol ethers. [Andrew and Hardin (Ex. 5–069), Doe (Ex. 5–0710, Hardin and Eisemann (Ex. 5–097), Weir (Ex. 5–120), Greene (Ex. 5–096), and Hanley et al (Ex. 4–120)]. These studies reported statistically significant increases in the incidence of adverse developmental effects including fetal death, skeletal defects, external malformations and digit or limb malformations. Dose response data from the animal studies were used to calculate an ED_{50} for those effects which were statistically significantly different from the controls. An ED_{50} is the dose at which 50% of an otherwise unaffected proportion of the population suffers an effect. The ED_{50} was derived using a log-probit analysis. This probit analysis assumes that effects occur in individual animals when specific thresholds of dose are exceeded and that there is a lognormal distribution of thresholds in the exposed group of animals or humans. ED_{50}s from the animal studies were then converted to 8 hour human ED_{50}s (ppm). This ED_{50} represents a dose at which 50% of a population will be affected by the chemical after an 8 hour exposure. Overall ED_{50} estimates were derived by taking geometric means of ED_{50}s calculated for 2–ME and 2–EE for individual effects. Six "best estimates" were derived in this manner. These "best estimates" were then used to calculate the doses of 2–ME or 2–EE corresponding to risks of one in a hundred (10^{-2}), one in ten thousand (10^{-4}) and one in a million (10^{-6}) for a particular developmental effect (Table VI–O).

TABLE VI–O.—DOSES (PPM) AT "BEST ESTIMATE" RISKS OF ONE IN A HUNDRED, ONE IN TEN THOUSAND, AND ONE IN A MILLION

Response	ED50 humans 8 hr (ppm)	Dose (ppm) at 10^{-2} risk	Dose (ppm) at 10^{-4} risk	Dose (ppm) at 10^{-6} risk
Post implantation loss:				
2–EE	127	8.7	1.8	0.53
2–ME	16	1.1	0.22	0.067
Minor skeletal defects:				
2–EE	5.3	0.36	0.073	0.022
Malformations:				
2–EE "external"	255	17	3.5	1.1
2–ME "total"	9.9	0.68	0.14	0.042

TABLE VI–O.—DOSES (PPM) AT "BEST ESTIMATE" RISKS OF ONE IN A HUNDRED, ONE IN TEN THOUSAND, AND ONE IN A MILLION—Continued

Response	ED50 humans 8 hr (ppm)	Dose (ppm) at 10^{-2} risk	Dose (ppm) at 10^{-4} risk	Dose (ppm) at 10^{-6} risk
"forepaw"	35	2.4	0.48	0.147

Extracted from Table 3–7, Hattis et al, (Ex. 5–121).

Assuming that a ppm exposure in humans would present the same risk as those observed in animals, Hattis et al. concluded that these projections suggest that doses as low as 0.36 ppm 2–EE would produce a risk of one in a hundred for skeletal defects and doses as low as 0.68 ppm 2–ME would produce a risk of one in a hundred for total malformations. It is interesting to note that from these two estimates 2–ME appears to be less potent than 2–EE which is contrary to most of the experimental data.

Continuous Effects Analysis. In this analysis animal data showing fetal weight reduction after exposure to 2–ME and 2–EE were used to calculate percentage reductions in fetal weight as a function of dose of 2–ME or 2–EE. For purposes of this analysis it was assumed that animals and humans would exhibit equal growth retardation for a given rate of glycol ether exposures expressed in ppm-hours per day. It was further assumed that percentage changes in fetal weight prior to birth would reflect similar percentage changes in birth weight. Percentage reductions in birth weight could then be used to project likely effects on infant mortality.

As a first step, Hattis et al. analyzed birth weight distributions and infant mortality rates from both black and white infants in the United States. These distributions were used to derive a relationship between infant mortality and birth weight changes.

As a second step, the relationship between fetal weight reduction (i.e. birth weight reduction) and the dose of 2–ME or 2–EE from the animal studies were combined with the relationship between birth weight changes and infant mortality from human infants. These two sets of relationships were used together to estimate expected changes in infant mortality for a given 8 hour exposure to 2–EE or 2–ME. Table VI–P presents the projected changes in infant mortality due to possible changes in infant birth weight associated with 2–EE and 2–ME exposures.

TABLE VI–P—PROJECTED CHANGES IN INFANT MORTALITY DUE TO POSSIBLE CHANGES IN INFANT BIRTH WEIGHTS ASSOCIATED WITH 2–ME and 2–EE EXPOSURES

PPM exposure level	Projected percent birthwt reduction	Total excess infant mortality
2–EE:		
0.01	.0003	1.45×10^{-7}
0.1	.003	1.45×10^{-6}
1	.03	1.45×10^{-5}
5	.15	7.3×10^{-5}
25	.75	3.7×10^{-4}
2–ME:		
0.01	.00243	1.18×10^{-6}
0.1	.0243	1.18×10^{-5}
1	.243	1.18×10^{-4}
5	1.215	6.1×10^{-4}
25	6.075	3.6×10^{-3}

Extracted from Table 4–6, Hattis et al. (Ex. 5–121).

As was the case for the male fertility analysis, the quantitative estimates derived from both the quantal and continuous effects data incorporate a number of large assumptions. The largest of these may be the assumption that a particular defect observed in an animal will translate into a similar defect in humans. As discussed earlier in the Health Effects section of this preamble, although adverse developmental effects in animals provide clear evidence of a chemical's potential ability to perturb development in humans, the effects observed in animals may not necessarily be identical to those which could potentially occur in humans. Even the authors themselves acknowledge that the risk calculations are based on a series of assumptions which carry considerable uncertainty. OSHA acknowledges that assumptions are often necessary for quantitative risk analyses. However given the lack of knowledge about the biological processes involved in reproductive and developmental toxicity, OSHA believes that the assumptions of these quantitative analyses may carry much more uncertainty than for other types of health outcomes such as cancer where the biological mechanisms are better understood.

In summary, the quantitative approaches of Hattis et al. are very innovative. These approaches, however, require that a number of large assumptions be made. These assumptions create considerable uncertainty in the quantitative risk estimates which are derived. In addition, the underlying data upon which these approaches are constructed have weaknesses of their own which further compound the uncertainties in the risk estimates. Nevertheless, these approaches do provide a starting point for a discussion of the quantitative risk assessment for reproductive and developmental toxins. Therefore OSHA welcomes all comments and analyses on these approaches for deriving quantitative risk estimates for adverse reproductive and developmental effects.

3. The Environ Risk Assessment

Under contract to the Chemical Manufacturer's Association (CMA), Environ Corporation prepared a report entitled "Scientific Basis for Safety Factors Needed to Protect Workers from Reproductive Toxicities of Glycol Ethers" (Ex. 4–016f). This report contains a brief review of the data available for a qualitative analysis of the health effects associated with glycol ethers and their acetates, but the primary focus of the report is the choice of uncertainty factor for determining an acceptable daily intake (ADI) for each of the substances.

Environ's approach for choosing an uncertainty factor (which Environ refers to as a safety factor), was to compare the lowest effective dose (i.e. the LOEL) in humans measured in milligrams per kilogram per day for ten substances known to cause developmental effects with the lowest effective dose measured in milligrams per kilogram per day in the most sensitive species of animal in which the substance has been tested and in which the observed effects were similar to those in humans. These data come from two sources: a 1981 report from the Council on Environmental Quality (CEQ) entitled "Chemical Hazards to Human Reproduction" and a 1984 report from the National Center for Toxicological Research (NCTR) entitled "Reliability of Experimental Studies for Prediction of Hazards to Human Development." By examining these data on other developmental toxicants,

Environ sought to obtain information which could be "useful for judging the magnitude of the uncertainty factor needed to protect humans from the developmental effects of [glycol ethers]."

Environ drew two conclusions from its analysis:

1. Application of a safety factor of 10 to NOELs from the most sensitive animal species would have been adequate to protect humans from the effects of most developmental toxicants for which quantitative dose-response data are available; and

2. A safety factor of 50, similarly applied, would have been adequate to protect humans from the effects of all developmental toxicants for which quantitative human dose-response data are available, although this factor may not have been adequate for one substance, thalidomide, assuming the rabbit (rather than the most sensitive species) had been chosen as the basis for establishing acceptable human exposures. If the most sensitive species had been chosen for thalidomide, a safety factor of 10–20 would have been adequate.

Environ supplemented this approach with an examination of historical precedents for the selection of uncertainty factors used to protect worker populations from the types of toxicity associated with glycol ethers or from other serious forms of toxicity. Environ stated that such information, "while not strictly scientific in nature, can further assist decision-making because it reveals the range of safety margins which other responsible decision-makers have accepted, and presumably reveals the safety margins that have proved adequate to protect worker populations. Information on the expected relative susceptibilities of the worker and the general populations and on how this has influenced the selection of safety factors will also be useful."

Environ looked at the guidelines or standards for protecting workers from reproductive hazards developed by OSHA, NIOSH, ACGIH, and the American Industrial Hygiene Association (AIHA) "in order to provide an estimation of the margin of safety associated with [their] standards and guidelines." Environ noted that "[u]nlike the case of standards developed for general population exposure to chemicals, [for worker populations] there has been no generic approach we can identify for the application of safety factors to the NOEL identified in experimental animals. This is true for both reproductive and other non-carcinogenic effects."

Environ found that as of 1985, the date of the Environ report, OSHA had regulated five substance principally on the basis of reproductive toxicity. These substances and their respective margins of safety were carbaryl, 5 times lower than the NOEL identified in animals; carbon disulfide, 1.3 times higher than the LOEL identified in animals; DBCP, 38 times lower than the NOEL identified in animals; chloroprene, 5 to 25 times higher than the LOEL identified in humans; and PCBs, 6 times lower than the LOEL identified in humans. (OSHA notes that the Environ report was written prior to promulgation of OSHA's Final Rule for Air Contaminants, 29 CFR Part 1910, published January 19, 1989. In that rulemaking, OSHA reduced the permissible exposure limits for both carbon disulfide and chloroprene.) In comparison, Environ found that NIOSH used uncertainty factors in its recommended standards for the same five substances ranging from 1 for a 15 minute exposure ceiling for chloroprene to 6000 for PCBs. The ACGIH had issued TLVs for all these substances except DBCP, and these TLVs ranged from 2 to 10 times higher than the LOEL identified in humans for chloroprene to 6 times lower than the LOEL identified in animals for PCBs. According to Environ, the AIHA had established a workplace environmental exposure level only for the reproductive toxicant piperidine, and in making its recommendation, the AIHA provided no margin of safety below the NOEL for embryotoxicity in the rat.

On the basis of its analysis of the CEQ data, the NCTR data, and historical precedent, Environ concludes that "the 100-fold [safety] factor has not been used for worker protection" and "there is support for a safety factor of 10 as adequate to protect workers against the developmental toxicities of the [glycol ethers and their acetates]." Environ goes on to note that a safety factor of 10 "appears to be adequate to cover most cases and it also accords with most past occupational risk management practices. If one seeks a margin that has limited historical precedent but which appears more certain to cover all likely cases, then a factor of 50 is recommended."

Noting that the factors 10 and 50 are not alternatives and that "it may be reasonable to settle on a factor between these two values", Environ applied these two uncertainty factors to the NOELs identified for the glycol ethers and their acetates. In its review of the literature, Environ, like OSHA, found the NOELs to be 10 ppm for 2–ME, 10 ppm for 2–MEA, 50 ppm for 2–EE, and 50 ppm for 2–EEA. (Environ found no data on the reproductive effects of 2–MEA, and like OSHA, used the NOEL identified for 2–ME to estimate the ADI for 2–MEA.) In its estimation of the ADI's, however, Environ took a different approach. First, that species most sensitive to the effects of the glycol ethers or their acetates was identified. In each case, this was found to be the rabbit. Next, the NOEL was converted from units of ppm to units of milligrams per kilogram per day. Then, the safety factors of 10 or 50 were applied to the converted NOEL to arrive at two estimates of the ADI. These estimates, in turn, were converted back to units of ppm assuming human parameters. Results of these calculations are presented in Table VI–Q.

TABLE VI–Q.—ESTIMATES OF ACCEPTABLE HUMAN DAILY INTAKES (ADIS) OF FOUR GLYCOL ETHERS BASED ON ANIMAL DATA AND SAFETY FACTORS OF 10 AND 50[a]

Glycol ether	NOEL[b] mg/kg/d	Species	ADI/10[c] mg/kg/d	ADI/50[d] mg/kg/d	ADI/10[e] ppm	ADI/50[f] ppm
2–ME	4.3	Rabbit	0.43	0.086	0.9	0.18
2–EE	25.5	Rabbit	2.6	0.52	4.6	0.92
2–MEA	[g] 6.7		0.67	0.13	0.9	0.18
2–EEA	18.8	Rabbit	2.6	0.52	4.6	0.92

[a] From the Environ Report (Ex. 4–016f).
[b] The NOEL identified in the most sensitive species converted from units of ppm to units of milligram per kilogram per day.
[c] ADI based on a safety factor of 10 and measured in units of milligrams per kilograms per day.
[d] ADI based on a safety factor of 50 and measured in units of milligrams per kilograms per day.
[e] ADI based on a safety factor of 10 and measured in units of ppm as an 8-hour time weighted average.
[f] ADI based on a safety factor of 50 and measured in units of ppm as an 8-hour time weighted average.
[g] No data available. Assumes 2–MEA is equipotent with 2–ME on a mole basis.

The interesting result in Table VI–Q is that the ADIs estimated by Environ using a uncertainty factor of 50 are not very different than the ADIs estimated by OSHA using an uncertainty factor of 100 without conversion of the NOEL to milligrams per kilogram per day. For 2–ME and 2–MEA, Environ found the ADI to be 0.18 ppm whereas OSHA found the ADI to be 0.1 ppm. For 2–EE and 2–EEA, Environ found the ADI to be 0.92 ppm whereas OSHA found the ADI to be 0.5 ppm. Obviously, the results are not so similar when an uncertainty factor of 10 is used.

Despite the similarity in results, OSHA has a number of concerns about the approach used by Environ to estimate the ADI for the glycol ethers and their acetates. First of all, OSHA questions the appropriateness of using the CEQ data and the NCTR data to establish the magnitude of safety factors needed to protect humans from the developmental effects of glycol ethers. Environ acknowledges a number of the data's limitations including the varying quality and extensiveness of the data bases from which these data were drawn, the subjective determination regarding the meaning of the term "lowest effective dose", the relatively small number of compounds examined, and the difficulty of obtaining accurate estimates of the human doses responsible for producing developmental toxicity.

OSHA believes that these limitations alone make these data unsuitable for the use to which Environ has put them. OSHA, however, sees additional limitations. Environ is comparing experimental LOELs in the most sensitive species to LOELs observed in humans to determine adequate safety factors. Implicit in this approach is the assumption that experimental LOELs are the "true" LOELs and that any exposure below that LOEL for either humans or animals will not result in adverse effects. As noted in a previous section of this risk assessment, there is in fact little reason to believe that the LOEL (or NOEL) identified in any study is indeed the "true" LOEL. Environ's approach makes no allowance for such a possibility.

Another limitation which Environ acknowledges is that it is not known whether the empirical relationships observed in the data reflect only interspecies differences or whether they reflect both interspecies differences and intraspecies differences. Environ concludes that it "seems likely although it is not certain, that the empirical relations discussed above would be protective of the most sensitive members of the human population", but OSHA notes that the opposite conclusion could just as easily be drawn. If the human data represent responses for the mid-range of the distribution of human responses, then, as Environ states, "the empirical relations reflect only interspecies differences, and an additional safety factor would seem necessary to compensate for intraspecies variability."

OSHA is also concerned about Environ's use of historical precedent to determine the margin of safety acceptable for protecting worker populations. Of the five substances reported by Environ to have been regulated by OSHA on the basis of reproductive toxicity, all but one, DBCP, were adopted as consensus standards by the Agency in 1971 under section 6(a) of the Occupational Safety and Health Act of 1970. Under that Section of the Act, Congress directed the Agency to "promulgate as an occupational safety and health standard any national consensus standard, and any established Federal standard, unless [the Secretary of Labor] determines that the promulgation of such a standard would not result in improved safety or health for specifically designated employees" (29 U.S.C. 651 et seq). In the case of DBCP, the only one of the five substances to be considered individually in a 6(b) rulemaking, the standard set by OSHA, as Environ acknowledges, was constrained by technological feasibility and not by acceptable margin of safety. In as much as standards for four of these substances were adopted without consideration of the individual substance and the standard for the fifth was constrained by technological feasibility, it is disingenuous of Environ to conclude that OSHA finds any particular margin of safety as acceptable for working populations.

Finally, OSHA questions the appropriateness of Environ's conversion of NOELs from units of ppm to units of milligrams per kilograms per day to estimate an ADI. On the one hand, Environ states that with regard to interspecies differences, "the available data on the ethers show a remarkably consistent pattern among the species tested. This suggests that the 10-fold factor conventionally used for interspecies extrapolation is not indicated." On the other hand, when the NOEL is converted into units of milligrams per kilogram per day, this "remarkable" consistency vanishes. For example, for 2–ME, Environ found that a NOEL of 10 ppm in rabbits corresponds to 4.3 mg/kg/day. For mice, however, the NOEL of 10 ppm found by Hanley et al (Ex. 4–106) corresponds to approximately 9.2 mg/kg/day, (using the mean weight for the 10 ppm exposure group on day 12, half-way through exposure, and assuming, like Environ, 100% absorption), more than two times greater than the NOEL for rabbits measured in the same units. For rats, the NOEL of 10 ppm found by Hanley et al (Ex. 4–042a) corresponds to approximately 5.93 mg/kg/day (also using the mean weight for the 10 ppm group on day 12, half-way through exposure, and assuming 100% absorption.) Thus, if Environ is going to convert the NOEL into units of milligrams per kilogram per day, an adjustment for interspecies variation must be considered.

OSHA seeks comment on whether the NOEL should be expressed in units of ppm or units of milligrams per kilogram per day. A number of commentors support the latter measure including CMA (Ex. 7–17) and NIOSH (Ex. 7–22), but the Agency notes that those commentors who calculated their own ADIs did no such conversion of units (see, for example, Ex. 7–23). Furthermore, the Agency is uncertain as to how one would convert a NOEL from units of ppm to units of milligram per kilogram per day from a study of developmental effects. Animals exposed during gestation are gaining weight rapidly. Thus, as a study progresses, the dose an animal receives decreases in terms of milligrams per kilogram per day. Clearly weight gain will be a function not only of the genetics of an individual animal but also of the number of fetuses a pregnant female is carrying. OSHA seeks comment on whether these factors should be accounted for in measuring dose, and if so, how this should be done.

VII. Significance of Risk

OSHA believes that the type of significant risk analysis the Agency has undertaken in this rulemaking is consistent with the studies generally available and, for the reasons set forth below and in the section on risk assessment, is a valid, accepted and customary scientific approach.

Section 6(b)(5) of the OSH Act vests authority in the Secretary of Labor to issue health standards. This section provides, in part, that the Secretary, in promulgating standards dealing with toxic materials or harmful physical agents under this subsection, shall set the standard which most adequately assures, to the extent feasible, on the basis of the best available evidence, that no employee will suffer material impairment of health or functional capacity even if such employee has regular exposure to the hazard dealt

with by such standard for the period of his working life.

OSHA is required to make two threshold findings before it can issue a health standard under section 6(b)(5) of the Act. In accordance with the Supreme Court's decision in the benzene case, *Industrial Union Department, AFL/CIO* v. *American Petroleum Institute*, 448 U.S. 601, 642 (1980), OSHA may promulgate a standard only if it finds that it is at least more likely than not that the risk OSHA seeks to regulate is "significant" and that the change in practices contemplated in the issuance of a standard would reduce or eliminate that risk.

OSHA's analytical approach to making a determination that a significant risk of material impairment exists from exposure to hazardous materials or harmful physical agents in the workplace takes into consideration a number of factors that are consistent with recent court interpretations of the Act and with rational, objective policy formulation. As prescribed by section 6(b)(5) of the Act, OSHA examines the body of the "best available evidence" on the adverse effects of the toxic materials or harmful physical agents to determine the nature and extent of possible health consequences resulting from exposure to the hazard in question. Where possible, quantitative assessments are conducted and the results are considered along with other relevant information, such as the nature and severity of the health consequences, as well as other qualitative evidence and expert opinion, to determine whether a hazard poses a significant risk to workers.

The Court gave some general guidance to the Agency for determining significant risk:

> Some risks are plainly acceptable and others are plainly unacceptable. If, for example, the odds are one in a billion that a person will die from cancer by taking a drink of chlorinated water, the risk clearly could not be considered significant. On the other hand, if the odds are one in a thousand that regular inhalation of gasoline vapors that are 2 percent benzene will be fatal, a reasonable person might well consider the risk significant and take the appropriate steps to decrease or eliminate it. (I.U.D. v. A.P.I., 448 U.S., 607, 655).

The Court indicated, that where possible, the determination of significant risk should be based upon quantitative risk assessment. However, recognizing the uncertainties involved, the Court qualified its predilection for quantitative assessment, saying:

> [T]he requirement that a "significant" risk be identified is "not a mathematical straitjacket. It is OSHA's responsibility to determine, in the first instance, what it considers to be a "significant" risk. *Id.*

The Court also pointed out that:

> OSHA is not required to support its findings that a significant risk exists with anything approaching scientific certainty * * *. [Section] 6(b)(5) [of the Act] specifically allows the Secretary to regulate on the basis of the "best available evidence." * * * Thus, so long as they are supported by a body of reputable scientific thought, the Agency is free to use conservative assumptions * * * risking error on the side of overprotection rather than under protection. *Id.*, at 656.

The Court noted that the ultimate determination that a particular level of risk is significant "will be based largely on policy considerations." *Id.*, at 655–56, n. 62.

Quantification of risk, the Court understood, cannot be achieved for every hazard. The four-judge plurality, speaking for the Court in the benzene decision, did not intend to require OSHA to do what cannot be done. The concurring opinion of Mr. Justice Powell and the dissenting opinion of Mr. Justice Marshall, speaking for four other members of the Court, confirm this. Mr. Justice Powell stated:

> The statutory preferences for the "best available evidence" * * * implies that OSHA must use the best known techniques for the accurate estimation of risks and benefits when such techniques are available. But neither the statute nor the legislative history suggests that OSHA's hands are tied when reasonable quantification cannot be accomplished by any known methods * * *. In this litigation, OSHA found that "it is impossible to precisely quantify the anticipated benefits * * *" If this finding is supported by substantial evidence, the statute does not prevent the Secretary from finding a significant health hazard on the basis of the weight of expert testimony and opinion. I do not understand the plurality to hold otherwise. *Id.*, at 666–7.

Similarly, Mr. Justice Marshall, in dissent, stated "[i]t is fortunate indeed that at least a majority of the Justices reject the view that the Secretary is prevented from taking regulatory action when the magnitude of a health risk cannot be quantified on the basis of current techniques" and concluded that "the Court appears willing not to require quantification when it is not fairly possible." *Id.*, 690, 716–17.

As a part of the overall significant risk determination, OSHA considers a number of factors. These include the type of risk presented, the quality of the underlying data, the reasonableness of the risk assessments, the statistical significance of the findings and the significance of risk (48 FR 1864; January 14, 1983).

The types of risk posed by exposure to glycol ethers are of the most serious kind. Developing fetuses exposed to glycol ethers may suffer the effects of such exposure for a lifetime, leading to a life of dependency instead of a life as a productive member of society. As noted by the Office of Technology Assessment in its report on Reproductive Hazards in the Workplace, "risk to a fetus may also be a risk to the woman herself. It may be direct, as in the risk of her own reproductive health; less direct, as in the risk to her health posed by spontaneous abortion; or indirect, in that she may suffer psychological damage and diminished life prospects with the occurrence of a miscarriage or on the birth of a dead or damaged baby." (Ex. 5–135, p. 330). It is also important to note that the father may also share the harm caused by the birth of a dead or damaged child.

The reproductive effects from exposure to glycol ethers are not solely loss of fertility, a serious effect in and of itself, but also include major dysfunction of the reproductive organs. Obviously material impairment of health includes not only death, but also impairments in basic biological processes, such as normal reproductive function, which can be of extraordinary personal importance. In its report on Reproductive Hazards in the Workplace, OTA states, and OSHA agrees, that "[c]oncern about reproductive processes is not limited to the brief periods in an individual's life during which reproduction may actually occur. Reproductive function is an integral part of everyday human health and well being. Before, during, and after the child bearing years, reproductive hormones may act, for example, on such variables as resistance to heart disease and cancer, immune function, complexion, bone mineral content, and feeling and mood. Threats to reproductive function can take place at nearly any point during an individual's life span." (Ex. 5–135, p. 43).

The hematological effects associated with exposure to glycol ethers may be reversible but are nonetheless debilitating and may reduce a worker's normal functional capacity. In addition, reduction in the white blood cell count may compromise an individual's capacity to fend off diseases, and for these reasons the hematological effects from exposure to glycol ethers must be considered to represent additional material impairment of health.

The data which support the finding of adverse health effects from exposure to glycol ethers are of the highest quality. As described in the Health Effects Section of this preamble, studies in

several animal species, by various routes of exposure, have consistently shown that exposure to 2–ME, 2–EE and their acetates cause adverse reproductive, developmental and hematological effects. For example, male test animals exposed to 2–ME, 2–EE and their acetates have exhibited interferences in spermatogenesis resulting in reduced sperm count and decreased fertility. Exposed males have also exhibited degeneration of the seminiferous tubules resulting in testicular atrophy. Pregnant females exposed to these glycol ethers exhibited signs of maternal toxicity such as decreases in maternal weight, decreased organ weights and increases in the lengths of gestation. Developmental effects among litters from exposed females include increased rates of resorptions (early embryonic death), decreased litter sizes, decreased fetal weights, visceral malformations, skeletal malformations, heart defects, neurochemical alterations and behavioral abnormalities. Experimental studies have also demonstrated exposure related decreases in several blood parameters including white blood cell counts, red blood cell counts and hemoglobin concentrations. Studies of humans exposed to these agents have reported findings of testicular atrophy, reduced sperm count and blood abnormalities.

In this preamble, OSHA has assessed the risk of adverse health effects from exposure to 2–ME, 2–EE, and their acetates and has determined that exposure to these glycol ethers poses developmental, reproductive, and hematological risks. While the Agency has assessed these risks, the present risk assessment differs from most previous OSHA risk assessments in that the Agency has not quantified the risks in the manner as it usually does. Instead, OSHA has performed a risk assessment using an uncertainty factor approach to determine its proposed permissible exposure limits (PELs).

The uncertainty factor approach entails identifying the most appropriate studies for each glycol ether (i.e., high quality studies using the most sensitive species) and determining the no observed effect level (NOEL) for each study. The NOELs are then divided by an uncertainty factor to arrive at estimates of the acceptable daily intakes (ADIs). These ADIs have been put forth as OSHA's proposed PELs.

For 2–ME, the same NOEL was identified for reproductive effects in three species: rats, rabbits, and mice. The replication of the NOEL in each of these bioassays lends confidence that the finding of any individual bioassay is not a statistical artifact. Likewise the replication of the NOELs for reproductive effects in two species exposed to 2–EE, rats and rabbits, also lends confidence in these studies' results. A NOEL for reproductive effects was identified in only one species for 2–EEA and in no species for 2–MEA, (this last substance has not been tested), but knowledge of the metabolism and pharmacokinetics of 2–ME and 2–EE supports using the results of studies of these substances to assess the risk from exposure to their acetates.

OSHA's approach to the assessment of reproductive and developmental risks is consistent with the approach to noncarcinogenic risk assessment adopted by a number of governmental agencies and international organizations including the U.S. Environmental Protection Agency (EPA), the U.S. Food and Drug Administration (FDA), the Joint Food and Agricultural Organization of the World Health Organization (FAO/WHO), and the National Academy of Sciences (NAS). This approach is favored because it requires no assumptions akin to those underlying carcinogenic risk assessment (i.e., that cancer is a multi-stage process). Little is known about the processes that lead to developmental and reproductive effects from exposure to toxic substances, and there are no generally accepted, biologically-based models for assessing these risks.

In addition, uncertainty factors and qualitative risk assessment have been utilized in other health standards when there have not been quantitative models available like those used to assess carcinogenic risk. (e.g., Hazard Communication, 48 FR 53280; Ethylene Oxide, 49 FR 25734; Field Sanitation, 52 FR 16050; Formaldehyde, 52 FR 46196) [1]. In an analogous context, the Court of Appeals for the District of Columbia Circuit has upheld EPA's use of "margins of safety" in setting ambient air standards to address uncertainties associated with inconclusive scientific and technical information. *American Petroleum Institute* v. *Costle*, 665 F.2d 1176, 1186–87 (1981), *cert. denied*, 449 U.S. 1042 (1980).

OSHA's choice of an uncertainty factor for estimating a human ADI from animal studies is also consistent with the recommendations of many of these organizations. For example, the FDA recommends using an uncertainty factor of 100 when NOELs are identified in chronic studies (such as those used by OSHA) in animals. Likewise, the NAS recommends an uncertainty factor of 100 when calculating an ADI from a NOEL found in animals. Although the choice of uncertainty factor may appear to be arbitrary, Dourson and Stara have provided a review of experimental evidence supporting this choice (Ex. 4–113).

The 100-fold uncertainty factor used by OSHA in this risk assessment is comprised of two factors: a ten-fold factor to account for inter-species variability (i.e., varying sensitivity across species) and a ten-fold factor to account for intra-species variability (i.e., varying sensitivity among members of a population). By making these adjustments, we increase the certainty that the ADI represents an exposure level below which adverse effects are unlikely.

By choosing a 100-fold uncertainty factor, however, OSHA is not regulating below the level of significant risk. A ten-fold factor for inter-species variability and a ten-fold factor for intra-species variability are necessary to assure that exposure at or below the OSHA proposed PELs will be unlikely to cause adverse health effects.

The ten-fold factor for inter-species variability is necessary to account for the potential differences between species' sensitivity to toxic agents. Differences in sensitivity may result from differences in metabolism or differences in reproductive function. For example, as noted by EPA in their guidelines for assessing male reproductive toxicity (Ex. 5–123), males of most test species produce sperm in numbers that greatly exceed the minimum requirements for fertility. However, human males, in general, produce fewer sperm relative to the number required for fertility. Thus, human males may be more sensitive to a reduction in sperm, as they may function nearer to the threshold for the number of sperm needed to ensure reproductive competence. Also differences in sensitivity may result from differences in metabolism. In the case of glycol ethers, both animals and humans appear to utilize the same metabolic pathway to produce the same

[1] In the update of the air contaminants standard, 54 FR 2332, uncertainty factors were also used in the significant risk analysis for non-carcinogens. On July 7, 1992, the Court of Appeals for the Eleventh Circuit determined that OSHA's use of uncertainty factors was unsupported. OSHA has addressed the concerns raised by the Eleventh Circuit in this preamble. In this and the preceding section, OSHA has provided a detailed analysis of the data and evidence that supports use of the NOEL-Uncertainty Factor approach as well as the appropriateness of an uncertainty factor of 100. In addition, OSHA has requested public comment on the appropriateness of the NOEL-Uncertainty Factor approach for making risk assessment regarding reproductive/developmental health effects and the use of an uncertainty factor of 100. Moreover, OSHA has requested interested parties to discuss alternative safety factors and methodologies for assessing risk of reproductive/developmental health effects.

primary metabolite. This primary metabolite is generally considered to be the active agent in the induction of adverse reproductive and developmental effects. However, the evidence also indicates that the biological half life of the metabolites in humans is greater than in animals. Thus the accumulation rates between animals and humans are not directly comparable. The above reasons reinforce the general support for the use of a ten fold uncertainty factor for inter species variability.

Furthermore, while it may appear that there is no inter-species variation in the NOELs for 2–ME and 2–EE, as discussed in the Risk Assessment Section of this preamble, this is a function of the study designs used by Hanley et al and Tinston et al and does not prove there is no inter-species variation in developmental risk from these glycol ethers. Lastly, although the bounds of normal reproductive function can be very broad, the complexity in the reproductive processes and the difficulty in conducting studies on the broad range of possible outcomes have resulted in experimental studies concentrating for the most part on only a few distinct periods in normal reproductive functioning. OSHA has relied upon these studies to determine the reproductive and developmental risks associated with glycol ethers, but the limitations of these studies provide additional support for a ten-fold factor for inter-species variability.

The ten-fold factor for intra-species variability is also necessary, and use of this factor does not result in reducing insignificant risk. Worker populations exposed to glycol ethers are not as homogeneous as the animal populations used in experimental studies. Furthermore, even if workers are healthier than the general population, it does not necessarily follow that this "healthy worker effect" will be conferred upon a developing fetus. In addition, both parents of the fetus need not necessarily be "healthy workers", and the fetus may inherit the genetic traits of either parent.

In utilizing the uncertainty factors in setting the proper PELs for the glycol ethers under consideration in this rulemaking, it has not been the Agency's objective to apply an uncertainty factor to eliminate all risk. If that had been the Agency's objective or mandate under the act, a much higher uncertainty factor would have to have been applied to ensure elimination of all risks. Rather, the Agency has used uncertainty factors to take into account only the highest uncertainties, such as inter-species and intra-species variability. The Agency believes that it has used the uncertainty factors in a reasonable manner and in utilizing the uncertainty factors the Agency has had as its goal reducing risks that are significant.

After considering the severity of the types of risk as shown by the qualitative analysis of the data, OSHA preliminarily concludes that exposure to 2–ME, 2–EE and their acetates presents a significant risk to employees exposed to these substances at the current PELs. The current PELs for 2–ME and 2–MEA are 25 ppm, two and one-half times larger than the NOEL for 2–ME in three species (i.e., 10 ppm). The current PELs for 2–EE and 2–EEA are 200 ppm and 100 ppm respectively. For 2–EE, this PEL is four times greater than the NOEL identified in two species (i.e., 50 ppm), and for 2–EEA, this PEL is two times greater than the NOEL identified in one species (i.e., 50 ppm). If the NOEL is an estimate of the threshold of exposure resulting in adverse effects in animals, and if humans have the same degree of sensitivity as animals, exposure at the current PELs poses risk of material impairment of health. If humans are more sensitive than animals and respond to exposure in a less homogeneous manner, then the risk is greater still that workers exposed at the current PELs will suffer adverse effects from such exposure.

OSHA also preliminarily concludes that the new glycol ethers standard will result in a reduction of significant risk. However as discussed earlier in the section on Risk Assessment there are uncertainties to the NOEL/Uncertainty Factor approach. It is assumed that at exposure levels derived by dividing an experimental NOEL by an uncertainty factor of 100, humans are unlikely to exhibit effects observed in experimental animals. However the ADI does not represent a level of exposure above which there is significant risk and below which there is no significant risk. For some individuals there may be some remaining risk below the ADI. For these reasons OSHA believes that the ancillary provisions of the standard such as exposure monitoring and medical surveillance will provide greater assurance that workers will not be at significant risk. Thus OSHA believes that these provisions are reasonably necessary.

VIII. Summary of the Regulatory Impact and Regulatory Flexibility Analysis

Introduction

Executive Order 12291 (46 FR 13197, Feb. 19, 1981) requires that a regulatory analysis be conducted for any rule having major economic consequences on the national economy, individual industries, geographical regions, or levels of government. The Regulatory Flexibility Act (5 U.S.C. 601 et seq.) similarly requires the Occupational Safety and Health Administration (OSHA) to consider the impact of the proposed regulation on small entities.

Consistent with these requirements, OSHA has prepared a Preliminary Regulatory Impact and Regulatory Flexibility Analysis (PRIA) for the proposed glycol ethers standard with 8-hour time-weighted average (TWA) permissible exposure limits (PELs) of 0.1 parts per million (ppm) for 2-methoxyethanol (2–ME) and 2–methoxyethanol acetate (2–MEA), and 0.5 ppm for 2–ethoxyethanol (2–EE) and 2–ethoxyethanol acetate (2–EEA) (Ex. 5–165). This analysis describes the industries affected by the standard, the regulatory alternatives considered, some of the potential benefits that will accrue to employees exposed to glycol ethers at their places of work, the costs of the proposed standard, and the technological and economic feasibility of the proposed provisions. The following is a summary of this analysis.

Background

The chemicals 2–ME, 2–EE, 2–MEA, 2–EEA are members of the family of ethylene glycol ethers. Referred to collectively in this analysis as "glycol ethers", these four chemicals have versatile solvent properties that make them useful in a wide variety of industries. The principal uses of glycol ethers are in chemical intermediates, paints and coatings, inks, and electronics.

The current OSHA PELs for 8-hour TWAs are 25 ppm for 2–ME and 2–MEA, 200 ppm for 2–EE, and 100 ppm for 2–EEA. They were established in 1971 based on the 1968 Threshold Limit Values (TLVs) recommended by the American Conference of Governmental Industrial Hygienists (ACGIH). These TLVs were based on hematotoxic and neurotoxic effects and on exposure concentrations reported in the early case reports on human health effects. More recent information from animal studies, however, indicates that adverse reproductive effects may occur at much lower concentrations. The ACGIH now recommends for all four glycol ethers an 8-hour TLV of 5 ppm, plus a "skin" notation to draw attention to the need to prevent cutaneous absorption.

In 1984, the U.S. Environmental Protection Agency (EPA) published an Advance Notice of Proposed Rulemaking (ANPR) regarding 2–ME, 2–

EE, 2–MEA, and 2–EEA. In 1986, the EPA referred the issue of rulemaking for these chemicals to OSHA. Subsequently, OSHA made a preliminary determination that the occupational risks identified by EPA could be eliminated or reduced by a revised OSHA standard. In 1987, OSHA published an ANPR announcing its intention to initiate rulemaking action for four glycol ethers (OSHA Docket, Ex. 6.)

The objective of this analysis is to measure the regulatory impact of the proposed TWAs and associated requirements, including Excursion Limits (ELs) equivalent to five times each TWA and action levels (ALs) equivalent to one-half of each TWA.

The principal source of information for this analysis is a study conducted for OSHA by PEI Associates, Inc., Technological Feasibility and Economic Impact Assessment of a Proposed Revision to the Glycol Ethers Standards, 1990, OSHA Docket, Ex. 5–164. A major source for PEI's report was an earlier study conducted for OSHA by Meridian Research, Inc., Industry Profile and Analysis of Processes, Occupational Exposures, and Substitutes for Glycol Ethers, 1987, OSHA Docket, Ex. 5–108.

PEI conducted three major data collection activities:

(1) All available monitoring data from work establishments were collected, categorized, and tabulated. These historical data were obtained primarily from OSHA, the National Institute for Occupational Safety and Health (NIOSH), and a study that PEI had conducted previously for EPA. Only post-1984 data were used because of a change in the limit of detection in the glycol ether sampling and analytical method in 1984.

(2) A joint PEI/NIOSH team visited nine facilities selected to be representative of the industries currently manufacturing, processing, and/or using at least one of the glycol ethers under consideration. Information was obtained at each site regarding processes, use of engineering and work practice controls and personal protective equipment (PPE), characteristics of the exposed work force, medical and industrial hygiene programs, and experience with substitute chemicals. To characterize full-shift and peak exposures in each job category with potential for exposure to glycol ethers, NIOSH also sampled at least one shift at each site.

(3) PEI mailed a survey questionnaire to approximately 2500 randomly selected potential users of glycol ethers in order to characterize the following:

—Extent of usage of glycol ethers in different industry segments.
—Process operations.
—Demographics of potentially exposed workers.
—Engineering and work practice controls currently in place and those necessary to achieve specified exposure levels.
—PPE currently in place and PPE necessary to achieve specified exposure levels.
—Financial characteristics of the industries.
—Experience with potential substitutes for glycol ethers.

Usable responses were obtained from 1,424 facilities through the mail questionnaire and subsequent telephone followup. Of the establishments submitting usable responses, 70 percent had never handled any of the four glycol ethers which are the subjects of this rulemaking, 13 percent had discontinued handling them, and 17 percent currently handled at least one of them.

Based primarily on data from the survey questionnaire and site visits, PEI developed model plants to represent average establishments in each industry category. The model plants were used to develop an exposure profile and estimate compliance costs. The number of model plants developed for each industry category depended on market structure and work force characteristics, including exposures. PEI also developed model plants for small businesses.

Industry Profile

The estimated 1987 domestic net sales (i.e., production less inventory changes) of the four glycol ethers amounted to 286 million pounds. The most widely distributed chemical was 2–EE (149 million pounds in 1987), followed by 2–EEA (85 million pounds), 2–ME (51 million pounds), and 2–MEA (1 million pounds). The largest consumption category for these chemicals was export (45 percent of sales), followed by use as chemical intermediates (24 percent of sales). The remaining 31 percent of sales of the glycol ethers was primarily for solvent use.

Table VIII–1 presents estimates of the number of glycol ether-using establishments covered by the proposed regulation, percent of small establishments, total employment, and number of exposed workers. Although jet fuel additives consume much 2–ME, they are excluded from this analysis because they are used almost exclusively in military applications. All other miscellaneous uses not addressed in this analysis are estimated to account for less than 1 percent of total usage of the glycol ethers.

Sales of the four glycol ethers have declined steadily over the past decade, probably as a result of increased concern over environmental and health issues.

TABLE VIII–1.—GLYCOL ETHERS INDUSTRY PROFILE

Industry category	Estimated number of establishments using glycol ethers	Percent small establishments*	Estimated total employment	Estimated exposed workers		
				Total	Males	Females under age 45
Manufacture of glycol ethers	4	0	5,120	344	320	24
Manufacture of chemical intermediates	5	0	44,500	80	60	20
Formulation of paints and coatings	183	57	13,176	2,745	2,562	183
Aircraft manufacturing/repainting	54	NA	244,782	1,998	1,998	0
Motor vehicle body manufacturing	16	57	69,920	736	736	0
Other metal applications	366	55	37,698	1,464	1,464	0
Automobile refinishing	8,777	75	43,885	26,331	26,331	0
Wood furniture manufacturing	370	67	27,750	8,140	3,330	2,590
Formulation of inks	86	67	5,848	946	860	86
Application of inks	86	89	11,180	946	516	430
Semiconductor manufacturing	142	54	47,428	1,704	710	852

TABLE VIII-1.—GLYCOL ETHERS INDUSTRY PROFILE—Continued

Industry category	Estimated number of establishments using glycol ethers	Percent small establishments*	Estimated total employment	Estimated exposed workers		
				Total	Males	Females under age 45
Printed circuit board manufacturing	44	61	7,392	352	220	132
Total	10,133	.....	558,679	45,786	39,107	4,317

* Establishments with fewer than 20 employees.
NA=Not Available.
Source: PEI.

Manufacture of Glycol Ethers

Four establishments operated by three companies (Union Carbide, Eastman Chemical, and Oxy Petrochemical) currently produce at least one of the four glycol ethers. (In 1990, Union Carbide, the sole producer of 2-MEA, discontinued its manufacture and sale. A submission by the Chemical Manufacturers Association (CMA) to OSHA reported that "only a very few users" were working off inventories of 2-MEA, OSHA Docket, Ex. 3-002.) Because of similarities in the production processes, plant capacity can be shifted from one of the four chemicals to another, as well as to other ethylene oxide derivatives.

Manufacture of Chemical Intermediates

In addition to the plants that produce 2-EEA and 2-MEA, four major producers of chemicals use 2-EEA or 2-MEA as an intermediate in five other plants: Eastman Chemical, Reichold Chemical, CPS Chemical, and Sartomer Company. The major use of 2-EE (86 percent of domestic consumption) is as a chemical intermediate. Its principal product is 2-EEA; 2-EE is also used as a chemical intermediate in the manufacture of ethoxyethyl methacrylate, ethoxyethyl ricinoleate, ethoxyethyl acrylate, and di(ethoxyethyl) phthalate.

The use of 2-ME as an intermediate to produce other chemicals, including 2-MEA, accounts for 24 percent of its domestic consumption. These chemicals also include di(2-methoxyethyl) phthalate (DEMP), which is used as a plasticizer in the manufacture of 35-mm film, vinyl-tris-B-methoxyethoxysilane, methoxyethylacrylate, 2-methoxyethyl silicate, methoxyethyl oleate, methoxyethyl acetyl ricinoleate, methoxyethyl ricinoleate, and methoxyethyl stearate.

Formulation of Paints and Coatings

Glycol ethers are used in polymerization, as a medium for pigment dispersion, and as a "let down" solvent to achieve desired coating application properties. They are used primarily in the formulation of Original Equipment Manufacture (OEM) paints for automobiles, metal furniture, and appliances and also as special-purpose coatings. The formulation of paints and coatings involves mixing glycol ethers and other solvents with resins, pigments, or base materials.

Aircraft Manufacturing/Repainting

Glycol ethers are contained in aircraft top coat paint and sometimes in paint additives. Aircraft are generally repainted every 4 to 5 years. Painting takes place in open bays in aircraft hangars, where the paints are applied by brush, roller, airless spray, or electrostatic spray. Smaller parts and support equipment are usually spray painted in a separate paint shop.

Motor Vehicle Body Manufacturing

Glycol ethers can be contained in electrocoat primers that are initially applied for corrosion protection, as well as in other primer and exterior color coatings. Electrocoats are applied to vehicle bodies by using conveyors to dip them into tanks containing the primer. Other primers and paints are generally applied by electrostatic guns in spray booths equipped with downdraft flow-through ventilation. Automatic spray guns are used to apply the primer coats on passenger car bodies.

Other Metal Applications

This industry category includes miscellaneous other establishments at which paints and coatings are spray painted onto metal:

- SIC 2514 (Metal Household Furniture)
- SIC 2522 (Metal Office Furniture)
- SIC 3411 (Metal Cans)
- SIC 3412 (Metal Shipping Barrels, Drums, Kegs, and Pails)
- SIC 34421 (Metal Doors, Sash and Frames Except Storm Doors)
- SIC 34699 (Other Stamped and Pressed Metal Products)
- SIC 3523 (Farm Machinery and Equipment)
- SIC 3563 (Air and Gas Compressors)
- SIC 3631 (Household Cooking Equipment)
- SIC 3632 (Household Refrigerators and Home and Farm Freezers)
- SIC 3714 (Motor Vehicle Parts and Accessories)

Automobile Refinishing

Some paints and coatings used in automobile refinishing contain small quantities of glycol ethers. Some spray painting operations take place in a spray booth, while other painting operations occur in the general shop environment.

Wood Furniture Manufacturing

Glycol ethers are used in some wood strains or lacquers because of their solvent properties. In general, the stains or lacquers are applied by spraying in booths, followed by additional hand-padding operations. The stains or lacquers may also be blended prior to the finishing operations.

Formulation of Inks

Glycol ethers are used as a solvent in inks, primarily in gravure, flexographic, and screen inks. They serve as co-solvents for ink resins and dyes in water-based inks. They are also used as solvents for textile printing and as active solvents to dissolve organic dyes. Glycol ethers are used in inks that are typically manufactured in small batches, to achieve the desired viscosity.

Application of Inks

Glycol ethers are used as ink solvents and thinners in silk screen, flexographic, and gravure printing. In silk screening, solvent-based inks are spread over and squeezed through the pores of a screen to print an image. After printing, the screen is washed by hand with a lacquer thinner. In flexographic printing, the plate with the image area is fastened to a cylinder, which is then immersed into the ink-filled reservoir of a letterpress. The image is transferred from the raised surface of the plate to a

flexible substrate. In gravure printing, an image is etched into the surface of a cylinder, which is then immersed in the reservoir of a web rotogravure or sheet-fed press. In a high-speed process, ink is transferred from the cylinder to the substrate by a capillary action. Printing operators may be exposed to glycol ethers during blending of inks and cleaning of printing press rollers.

Semiconductor Manufacturing

Glycol ethers are used primarily as photoresists in the photolithographic portion of the wafer manufacturing process. The photoresist may be applied to the silicon wafer either manually by syringe or in an automated system that pumps the solution directly from storage to a spin coater. Glycol ethers may also be used as components of the inks used for marking the completed devices with a part number. The cleaning compounds used to dissolve the epoxy resin that mounts wafers to polishing fixtures also may contain glycol ethers.

Printed Circuit Board Manufacturing

Glycol ethers are used as a solvent in epoxy resin that is laminated onto fiberglass reinforcement. It is normally applied in enclosed spray chambers. Glycol ethers also may be present in formulations used for marking, bonding, and labeling the printed circuit boards.

Worker Exposures

Workers may be exposed to glycol ethers in many of the activities in the 12 industry categories evaluated in this study. Table VIII-2 lists the principal job categories in each industry category and the current weighted plant geometric mean (GM) exposures and weighted plant arithmetic mean (AM) exposures for each glycol ether.

Geometric means are usually the preferred measure of expressing central tendency for observations which are log-normally distributed. By design, the formula for geometric means suppresses the value of outlying data observations. When used in combination with prescriptions for engineering controls to reduce employee exposure levels, for example, it makes the case for technological feasibility clearer by using geometric means (compared with a single arithmetic mean calculation, in which the values of outlyers are not suppressed).

TABLE VIII-2.—EXPOSURE CHARACTERIZATION BY INDUSTRY AND JOB CATEGORY

Industry category and job category	Estimated number of exposed workers	Weighted plant geometric mean baseline exposure, PPM				Weighted plant arithmetic mean baseline exposure, PPM			
		2-ME*	2-MEA*	2-EE*	2-EEA	2-ME*	2-MEA*	2-EE*	2-EEA
Manufacture of glycol ethers:									
All workers	344								
Loading technician	96	0.046	N/A	0.022	0.027	0.151	(a)	0.047	0.043
Process technician	72	0.032	N/A	0.092	0.049	0.044	(a)	0.177	0.077
Lab technician	68	0.023	N/A	0.015	0.023	0.027	(a)	0.017	0.031
Maintenance technician	92	(b)	N/A	0.057	0.058	(b)	(c)	0.079	0.116
Supervisor	16	0.017	N/A	0.026	0.017	0.017	(a)	0.047	0.017
Manufacture of chemical intermediates**:									
All workers	80								
Loading technician	50	0.046	N/A	0.022	N/A	0.151	N/A	0.047	N/A
Process technician	10	0.032	N/A	0.092	N/A	0.044	N/A	0.177	N/A
Lab technician	10	0.023	N/A	0.015	N/A	0.027	N/A	0.017	N/A
Maintenance technician	10	(b)	N/A	0.057	N/A	(b)	N/A	0.079	N/A
Formulation of paints and coatings:									
All workers	2,745								
Packer	732	(b)	(c)	1.249	1.370	(b)	(c)	1.980	3.643
Batchmaker	1,464	0.354	(a)	0.673	0.870	0.906	(a)	0.714	1.072
Lab technician	549	0.215	(a)	(d)	0.107	0.215	(a)	(d)	0.118
Aircraft manufacturing/repainting:									
Spray painter	1,998	N/A	N/A	(d)	3.781	N/A	N/A	(d)	7.916
Motor vehicle body manufacturing:									
All workers	736								
Spray painter	576	N/A	N/A	(d)	0.005	N/A	N/A	(d)	0.035
Dip painter	64	N/A	N/A	(d)	0.012	N/A	N/A	(d)	0.013
Paint mixer	96	N/A	N/A	(d)	0.010	N/A	N/A	(d)	0.227
Other metal applications:									
Painter	1,464	0.218	0.104	0.052	0.072	0.275	0.364	0.111	0.397
Automobile refinishing***:									
Spray painter	26,331	0.218	0.104	0.052	0.071	0.275	0.364	0.111	0.395
Wood furniture manufacturing:									
Finisher	8,140	(e)	N/A	(d)	0.656	(e)	N/A	(d)	0.830
Forumlation of inks****									
All workers	946								
Packer	86	(b)	(c)	1.249	1.370	(b)	(c)	1.980	3.643
Batchmaker	602	0.354	(a)	0.673	0.870	0.906	(a)	0.714	1.072
Lab technician	258	0.215	(a)	(d)	0.107	0.215	(a)	(d)	0.118
Application of inks:									
Printing operator	946	0.035	(a)	0.056	0.038	0.043	(a)	2.441	2.071
Semiconductor manufacturing:									
Technician	1,704	0.020	(a)	(d)	0.011	0.022	(a)	(d)	0.048
Printed circuit board manufacturing:									
All workers	352								
Coater	176	0.078	(a)	0.017	0.012	0.378	(a)	0.031	0.030
Lab technician	132	(e)	(c)	(d)	0.134	(e)	(c)	(d)	0.217

TABLE VIII-2.—EXPOSURE CHARACTERIZATION BY INDUSTRY AND JOB CATEGORY—Continued

Industry category and job category	Estimated number of exposed workers	Weighted plant geometric mean baseline exposure, PPM				Weighted plant arithmetic mean baseline exposure, PPM			
		2-ME*	2-MEA*	2-EE*	2-EEA	2-ME*	2-MEA*	2-EE*	2-EEA
Manufacturing specialist	44	N/A	N/A	N/A	N/A	N/A	N/A	N/A	N/A
Total	45,786								

* If no monitoring data were available for a substance, PEI assumed that exposures were equal to those for similar glycol ether in the same industry and job category: (a) indicates 2-MEA exposures were assumed to equal 2-ME exposures; (b) indicates 2-ME exposures were assumed to equal 2-EE exposures; (c) indicates 2-MEA exposures were assumed to equal 2-EEA exposures; (d) indicates 2-EE exposures were assumed to equal 2-EEA exposures; (e) indicates 2-ME exposures were assumed to equal 2-EEA exposures.
** Baseline exposures were assumed to equal those for Manufacture of Glycol Ethers.
*** Baseline exposures were assumed to equal those for Metal Applications.
**** Baseline exposures were assumed to equal those for Formulation of Paints and Coatings.
N/A = Not Applicable.
Source: PEI.

But there is a problem for health analysis when the traditional geometric mean representation is used to categorize employee exposures to hazardous substances. Epidemiological and animal studies often document or suggest the greater vulnerability of the human organism to short term high dose exposures to hazardous substances, as opposed to continual, routine exposure at lower doses. In statistical terms, the intermittent, infrequent, high dose exposures represent outlyers in the data. The values which are potentially most threatening or harmful to humans are deliberately suppressed when a geometric mean is used to categorize the data.

In policy terms, because the underlying distribution is normally distributed (lognormal) and susceptible to a geometric mean representation, does not require that this measure of central tendency be used for health benefits calculations. In fact, to the extent that it camouflages or distracts attention from potentially dangerous short term exposure conditions, it probably should not be used for such calculations or used only in combination with information on the distribution of the outlying data. In this analysis, geometric mean analysis is supplemented with arithmetic mean data which better reflect the influence of the outlying observations. In most industry/job categories, average exposures are already below the proposed TWAs (although it is possible that individual exposures may exceed the proposed levels). The lowest average exposures occur during the manufacture of glycol ethers and in the manufacture of semiconductors and printed circuit boards.

There are a total of 45,786 exposed workers in 10,133 establishments in the 12 industry categories. The largest number of exposed workers occurs in the automobile refinishing category, which also has the lowest number of exposed workers per establishment.

Benefits Analysis

The benefits of reducing employee exposure to glycol ethers are estimated using incidence data from animal studies and worker exposure data. The levels above which adverse health effects are likely to occur in humans are developed from the animal studies using an uncertainty factor of 100; that is, each "no observed effect level" (NOEL) observed in the animal studies is reduced by a factor of 100 to yield the corresponding human exposure level.

OSHA's analysis of the benefits that are likely to occur as a result of limiting exposures to glycol ethers does not consider decreases in adverse hematological effects and in behavioral abnormalities in the offspring of exposed adults. Also, OSHA's analysis relies on animal studies that use inhalation as the route of exposure; the dosages of glycol ethers administered in inhalation studies are more readily quantifiable than those in absorption or ingestion studies and the majority of job categories considered at risk involve the inhalation of glycol ether vapors. However, dermal workplace exposures do occur, but these were not quantified. Thus, the benefits in this analysis are underestimated. The health effects estimated in this analysis and shown in Table VIII-3 are the estimated incidence of developmental effects of glycol ether exposure on the pregnancies of females under age 45 and the estimated incidence of adverse reproductive effects in male employees. The benefits were calculated assuming a 45 year working lifetime for both sexes. No effort is directed at delineating the types of fetal defects avoided. Since both 2-ME and 2-MEA are metabolized in humans to methoxyacetic acid, the benefits of limiting exposure to these compounds are displayed together. Similarly, the benefits associated with reductions in 2-EE and 2-EEA exposures are displayed together.

TABLE VIII-3.—PROJECTED BENEFITS OF PROPOSED STANDARD

Effects	Number of workers exposed above proposed PEL	Annual number of adverse effects or cases avoided
Developmental effects/female workers aged 18 to 45:		
From exposure to 2-ME/2-MEA	157	0.4 to 4.5.
From exposure to 2-EE/2-EEA	573	1.7 to 8.0.
Total developmental effects	730	2.0 to 12.4.
Reproductive cases/male workers:		
From exposure to 2-ME/2-MEA	2,604	200 to 490.

TABLE VIII-3.—PROJECTED BENEFITS OF PROPOSED STANDARD—Continued

Effects	Number of workers exposed above proposed PEL	Annual number of adverse effects or cases avoided
From exposure to 2-EE/2-EEA	4,294	63 to 611.
Total reproductive cases	6,898	262 to 1,101.

Note: Other benefits have not been quantified: reductions in hematological effects, behavioral abnormalities in offspring, and effects of dermal exposure.

Sources: PEI, Office of Regulatory Analysis.

An estimated total of 2.0 to 12.4 adverse effects on fetal development per year would be avoided under the proposed standard (TWAs of 0.1 ppm for 2-ME and 2-MEA; 0.5 ppm for 2-EE and 2-EEA). These adverse developmental effects would be avoided principally in ink application, electronics, formulation of paints and coatings, and wood furniture manufacturing.

For male workers, an estimated 262 to 1,101 adverse reproductive conditions (reduced testes size, reduced sperm count and/or other impairment of reproductive functioning) would be avoided per year under the proposed standard. The impairments will persist in exposed workers for as long as they are exposed. New cases will develop among new workers as, over time, work forces turn over and new individuals become exposed. These benefits would occur principally in automobile refinishing, aircraft manufacturing and repainting, and formulation of paints and coatings.

Technological Feasibility

OSHA has preliminarily determined that the proposed standard is technologically feasible. OSHA determines that the proposed TWAs are capable of being achieved in most of the operations most of the time by means of engineering and work practice controls. In certain situations for a very limited number of employees (i.e., under 2% of all full-time equivalent (FTE) workers exposed to glycol ethers in the industries involved) supplementary respiratory protection may be necessary. In most instances, when the 8-hour TWA has been met through engineering controls, no use of respirators would be necessary to meet the 15-minute EL.

For example, in auto refinishing, which employs an estimated 26,331 exposed workers, who constitute 58% of all workers exposed to glycol ethers, OSHA estimates that the exposure levels for 98% of these workers can be reduced to or below the proposed TWAs and ELs by means of substitution, engineering, and work practice controls. OSHA estimates that, on an FTE basis, fewer than 1% of all currently exposed auto refinishing workers would require respiratory protection. In addition, OSHA preliminarily determines that exposure levels, as measured by geometric means, can be controlled to or below the proposed 8-hour TWAs solely by means of engineering and work practice controls in a vast majority of operations across the affected industries. Specifically, geometric mean exposure levels can be controlled to or below the TWAs in 16 of 22 2-ME operations, in 8 of 12 2-MEA operations, in 25 of 26 2-EE operations, and in 17 of 18 2-EEA operations.

The best evidence of technological feasibility is that the proposed levels are already being achieved in the affected industries with current controls. Across industries using glycol ethers, geometric mean exposures are already at or below the proposed TWAs in a majority of operations. These exposure data suggest that relatively few additional controls would be necessary to consistently reduce 8-hour exposures and peak exposures to or below the proposed standard.

In order to assess technological feasibility, PEI considered substitution of other solvents for glycol ethers, other engineering controls, personal protective equipment (PPE), and administrative measures, such as inspections to detect leaks in areas where glycol ethers are handled. PEI applied specific engineering or other controls until the predicted exposure level for each industry/job category was reduced to no more than one-half of each of the proposed alternative TWAs for each glycol ether. The exposure level for determining when additional controls would be necessary was based on weighted plant geometric mean exposures or weighted plant arithmetic mean exposures. The purpose of conducting the technological feasibility analysis using each of the two types of means was to determine if the costs and exposure levels differ significantly with the varying degrees of engineering controls and respirators necessitated by the two different approaches. In most cases, there is little difference.

The technological feasibility of meeting ELs that were equivalent to five times each TWA was assessed separately. During its site visits, PEI was able to collect both short-term and full-shift monitoring data on some individuals whose jobs involved the potential for peak exposures. PEI assumed that job categories with TWA levels that are currently below one-half the proposed TWA would not experience excursions above the EL during normal operations. In establishments that required only engineering controls to meet a proposed TWA, the use of ASRs would be required for about one-quarter of the workers in job categories that had a potential for peak exposures. With both respirators and engineering controls, no additional requirements were assumed to be necessary to meet the EL.

Engineering Controls

The systems which PEI specified were based on American Conference of Governmental Industrial Hygienists (ACGIH) recommendations for good engineering practice. They are conventional, readily available, and in use today. The primary engineering control recommended for most categories was local exhaust ventilation (LEV). Process enclosures, which provide greater exposure control than hoods, were recommended for some operations.

The following incremental engineering controls are considered technically feasible for the industry categories in this study:

- Manufacture of Glycol Ethers:
  - —Closed-loop transfer for loading operations
  - —Enclosed sampling systems with sample coolers
  - —Laboratory hood in quality control (QC) laboratory
- Manufacture of Chemical Intermediates:
  - —Automated drum filling station with LEV
  - —Enclosed sampling systems with sample coolers
  - —Laboratory hood in QC laboratory
- Formulation of Paints and Coatings:

—Closed-loop transfer system
—LEV on packaging line
—LEV on mixing tank
—Drum hoist/scale (small formulator plants)
—Laboratory hood in QC and R&D laboratories
- Aircraft Manufacturing/Repainting:
—Paint spray booth for small parts
—Airless spray guns with "cup collars"
- Motor Vehicle Body Manufacturing:
—LEV on paint mixing tank
—Paint spray booth
- Other Metal Applications:
—Paint spray booth
- Automobile Refinishing:
—Paint spray booth
- Wood Furniture Manufacturing:
—Paint spray booth
- Formulation of Inks:
—Closed-loop transfer system
—LEV on packaging line
—LEV on mixing tank
—Drum hoist/scale (small formulator plants)
—Laboratory hood in QC and R&D laboratories
- Application of Inks:
—LEV at press rollers and inkwell
—Process enclosure of press
- Semiconductor Manufacturing:
—LEV at the application of photoresist
—Process enclosure at the application of photoresist
- Printed Circuit Board Manufacturing:
—LEV on blending/mixing operations
—LEV on masking operation
—LEV on coating operation
—Process enclosure of coating operation

Personal Protective Equipment

When the implementation of engineering controls did not reduce the predicted exposures for a job category to below the target level, ASRs were prescribed. Cartridge respirators are considered inadequate because the odor thresholds of the four glycol ethers do not allow workers to adequately detect breakthrough at concentrations as low as the proposed regulatory alternatives.

Dermal exposure can be reduced through gloves, protective clothing, and eye protection. Evidence indicates that butyl rubber gloves may be appropriate for operations that involve heavy handling and high potential for direct contact. Neoprene gloves may be appropriate for some production-related activities, such as loading rail cars and taking quality control samples. Latex gloves may be appropriate for operations that involve light handling and only occasional contact.

Substitution

Substitution of other chemicals is an option for eliminating exposure to 2-ME, 2-MEA, 2-EE, and 2-EEA, although no single "drop in" substitute exists for all applications. The most common substitutes, according to PEI's survey, are propylene glycol monomethyl ether (PGME), ethylene glycol monobutyl ether (2-BE), ethylene glycol monoproply ether (2-PE), and their acetates. Together, these six chemicals account for almost 90 percent of reported substitutions. Evidence suggests that they would pose a lower hazard in the workplace than the four glycol ethers being considered in this standard.

A substitution rate was assumed for each industry category based on the availability, suitability, and cost of substitutes; the capital and operating and maintenance (O&M) costs of compliance techniques; and the industry category's position in the chain of distribution (i.e., its flexibility in forcing or responding to substitution). The rate of substitution is assumed to be the same for the geometric mean and arithmetic mean exposure approaches. The following substitution rates were developed:

- Manufacture of Glycol Ethers and Intermediates: No substitution; export and chemical intermediate uses represent large proportions of total production of all four glycol ethers.
- Formulation of Paints and Coatings: 90%; most formulators already have or are developing substitutes.
- Aircraft Manufacturing/Repainting: 70%.
- Motor Vehicle Body Manufacturing: 70%.
- Other Metal Applications: 70%.
- Automobile Refinishing: 90%.
- Wood Furniture Manufacturing: 90%; use of glycol ethers is already dropping rapidly.
- Formulation and Application of Inks: 90%; much substitution has already taken place.
- Semiconductors: 10%; acceptable substitutions are not generally available.
- Printed Circuit Boards: 50%; acceptable substitutes are generally available.

Exposure Reduction

Tables VIII-4 through VIII-7 show exposure reductions for each glycol ether after applying engineering controls. In many industry/job categories, no engineering controls would be needed to meet the proposed TWAs, although respirators might be needed to meet the proposed ELs.

Of the workers who are currently exposed to glycol ethers, only five percent (under either the geometric mean approach or the arithmetic mean approach) would require air-supplied respirators. The highest percentages of workers who would require ASRs are found in aircraft manufacturing/repainting and "other" metal applications. On a full-time equivalent basis, only two percent (under either approach) would require ASRs. (See Tables VIII-8 and VIII-9.)

TABLE VIII-4.—EXPOSURE REDUCTIONS FOR 2-ME AFTER APPLYING ENGINEERING CONTROLS

Industry category and job category	Current utilization of engineering controls (percent)	Geometric mean approach		Arithmetic mean approach	
		Baseline weighted plant geometric mean exposure (ppm)	Average exposures after applying engineering controls (ppm)	Baseline weighted plant arithmetic mean exposure (ppm)	Average exposures after applying engineering controls (ppm)
Manufacture of glycol ethers:					
Loading technician	50	0.046	NC	0.151	0.008
Process technician	90	0.032	NC	0.044	NC
Laboratory technician	90	0.023	NC	0.027	NC
Maintenance technician	0	*0.057	NC	*0.079	NC
Supervisor	0	0.017	NC	0.017	NC
Manufacture of chemical intermediates:					
Loading technician	90	0.046	NC	0.151	0.027
Process technician	90	0.032	NC	0.044	NC

TABLE VIII–4.—EXPOSURE REDUCTIONS FOR 2–ME AFTER APPLYING ENGINEERING CONTROLS—Continued

Industry category and job category	Current utilization of engineering controls (percent)	Geometric mean approach		Arithmetic mean approach	
		Baseline weighted plant geometric mean exposure (ppm)	Average exposures after applying engineering controls (ppm)	Baseline weighted plant arithmetic mean exposure (ppm)	Average exposures after applying engineering controls (ppm)
Laboratory technician	90	0.023	NC	0.027	NC
Maintenance technician	0	*0.057	NC	*0.079	NC
Formulation of paints and coatings:					
Packer	10	*1.249	0.250	*1.980	0.396
Batchmaker	70	0.354	0.223	0.906	0.289
Laboratory technician	70	0.215	0.019	0.215	0.025
Other metal applications:					
Painter	90	0.218	0.212	0.275	0.242
Auto refinishing:					
Spray painter	67	0.218	0.060	0.275	0.110
Wood furniture manufacturing:					
Finisher	90	**0.656	0.485	**0.830	0.490
Formulation of inks:					
Packer	20	*1.249	0.431	*1.980	0.532
Batchmaker	80	0.354	0.223	0.906	0.289
Laboratory technician	70	0.215	0.019	0.215	0.025
Application of inks:					
Printing operator	63	0.035	NC	0.043	NC
Semiconductor manufacturing:					
Technician	82	0.020	NC	0.022	NC
Printed circuit board manufacturing:					
Manufacturing specialist	63	0.078	0.021	0.378	0.054
Coater	63	**0.134	0.027	**0.217	0.043

NC = No change from baseline; no use of engineering controls (although respirators may be required to meet EL).
* No data on baseline 8-hour TWA exposure to 2–ME available for this job category. Data for 2–EEA were used.
** No data on baseline 8-hour TWA exposure to 2–ME available for this job category. Data for 2–EEA were used.
Source: PEI.

TABLE VIII–5.—EXPOSURE REDUCTIONS FOR 2–MEA AFTER APPLYING ENGINEERING CONTROLS

Industry category and job category	Current utilization of engineering controls (percent)	Geometric mean approach		Arithmetic mean approach	
		Baseline weighted plant geometric mean exposure (PPM)	Average exposures after applying engineering controls (PPM)	Baseline weighted plant arithmetic mean exposure (PPM)	Average exposures after applying engineering controls (PPM)
Formulation of paints and coatings:					
Packer	10	**1.370	0.274	**3.643	0.729
Batchmaker	70	*0.354	0.223	*0.906	0.289
Laboratory technician	70	*0.215	0.019	*0.215	0.025
Other metal applications:					
Painter	90	0.104	0.043	0.364	0.233
Auto refinishing:					
Spray painter	67	0.104	0.043	0.364	0.233
Formulation of inks:					
Packer	20	**1.370	0.330	**3.643	0.757
Batchmaker	80	*0.354	0.223	*0.906	0.532
Laboratory technician	70	*0.215	0.019	*0.215	0.025
Application of inks:					
Printing operator	63	*0.035	NC	*0.043	NC
Semiconductor manufacturing:					
Technician	82	*0.020	NC	*0.022	NC
Printed circuit board manufacturing:					
Manufacturing specialist	63	*0.078	0.021	*0.378	0.054
Coater	63	**0.134	0.027	**0.217	0.043

NC=No change from baseline; no use of engineering controls (although respirators may be required to meet EL).
* No monitoring data on baseline 8-hour TWA exposure to 2–MEA were available. Data for 2–ME were used.
** No monitoring data on baseline 8-hour TWA exposure to 2–MEA were available. Data for 2–EEA were used.
Source: PEI.

TABLE VIII–6.—EXPOSURE REDUCTIONS FOR 2–EE AFTER APPLYING ENGINEERING CONTROLS

Industry category and job category	Current utilization of engineering controls (percent)	Geometric mean approach		Arithmetic mean approach	
		Baseline weighted plant geometric mean exposure (PPM)	Average exposures after applying engineering controls (PPM)	Baseline weighted plant arithmetic mean exposure (PPM)	Average exposures after applying engineering controls (PPM)
Manufacture of glycol ethers:					
Loading technician	50	0.022	NC	0.047	NC
Process technician	90	0.092	0.049	0.177	0.119
Laboratory technician	90	0.015	NC	0.017	NC
Maintenance technician	0	0.057	NC	0.079	NC
Supervisor	0	0.026	NC	0.047	NC
Manufacture of chemical intermediates:					
Loading technician	90	0.022	NC	0.047	NC
Process technician	90	0.092	0.049	0.177	0.119
Laboratory technician	90	0.015	NC	0.017	NC
Maintenance technician	0	0.057	NC	0.079	NC
Formulation of paints and coatings:					
Packer	10	1.249	0.250	1.980	0.396
Batchmaker	70	0.673	0.324	0.714	0.361
Laboratory technician	70	*0.107	0.041	*0.118	0.056
Aircraft manufacturing/repainting:					
Spray painter	67	*3.781	1.569	*7.916	2.160
Motor vehicle body manufacturing:					
Spray painter	90	*0.005	NC	*0.035	NC
Dip painter	90	*0.012	NC	*0.013	NC
Paint mixer	50	*0.010	NC	*0.227	0.050
Other metal applications:					
Painter	90	0.052	0.051	0.111	*0.098
Auto refinishing:					
Spray painter	67	0.052	0.048	0.111	0.080
Wood furniture manufacturing:					
Finisher	90	*0.656	0.485	*0.830	0.490
Formulation of inks:					
Packer	20	1.249	0.431	1.980	0.532
Batchmaker	60	0.673	0.324	0.714	0.361
Laboratory technician	70	*0.107	0.041	*0.118	0.056
Application of inks:					
Printing operator	63	0.056	0.046	2.441	NC
Semiconductor Manufacturing:					
Technician	82	*0.011	NC	*0.048	NC
Printed circuit board manufacturing:					
Manufacturing specialist	63	0.017	NC	0.031	NC
Coater	63	*0.134	0.027	*0.217	0.043

NC = No change from baseline; no use of engineering controls (although respirators may be required to meet EL).
* No data on baseline 8-hour TWA exposure 2–EE available for this job category. Data for 2–EEA were used.
Source: PEI.

TABLE VIII–7.—EXPOSURE REDUCTIONS FOR 2–EEA AFTER APPLYING ENGINEERING CONTROLS

Industry category and job category	Current utilization of engineering controls (percent)	Geometric mean approach		Arithmetic mean approach	
		Baseline weighted plant geometric mean exposure (PPM)	Average exposures after applying engineering controls (PPM)	Baseline weighted plant arithmetic mean exposure (PPM)	Average exposures after applying engineering controls (PPM)
Manufacture of glycol ethers:					
Loading technician	50	0.027	NC	0.043	NC
Process technician	90	0.049	NC	0.077	0.062
Laboratory technician	90	0.023	NC	0.031	NC
Maintenance technician	0	0.058	NC	0.116	NC
Supervisor	0	0.017	NC	0.017	NC
Formulation of paints and coatings:					
Packer	10	1.370	0.274	3.643	0.729
Batchmaker	70	0.870	0.450	1.072	0.581
Laboratory technician	70	0.107	0.041	0.118	0.056
Aircraft manufacturing/repainting:					
Spray painter	67	3.781	1.569	7.916	2.160
Other metal applications:					
Painter	90	0.072	0.063	0.397	0.210

TABLE VIII–7.—EXPOSURE REDUCTIONS FOR 2–EEA AFTER APPLYING ENGINEERING CONTROLS—Continued

Industry category and job category	Current utilization of engineering controls (percent)	Geometric mean approach		Arithmetic mean approach	
		Baseline weighted plant geometric mean exposure (PPM)	Average exposures after applying engineering controls (PPM)	Baseline weighted plant arithmetic mean exposure (PPM)	Average exposures after applying engineering controls (PPM)
Wood furniture manufacturing:					
Finisher	90	0.656	0.485	0.830	0.490
Formulation of inks:					
Packer	20	1.370	0.330	3.643	0.757
Batchmaker	80	0.870	0.450	1.072	0.581
Laboratory technician	70	0.107	0.041	0.118	0.056
Application of inks:					
Printing operator	63	0.038	NC	2.071	0.111
Semiconductor manufacturing:					
Technician	82	0.011	NC	0.048	NC
Printed circuit board manufacturing					
Mfg specialist	63	0.012	NC	0.030	NC
Coater	63	0.134	0.027	0.217	0.043

NC=No change from baseline; no use of engineering controls (although respirators may be required to meet EL).
Source: PEI.

TABLE VIII–8.—METHODS OF CONTROLLING EMPLOYEE EXPOSURES (GEOMETRIC MEAN APPROACH)

Industry category	Estimated total exposed workers	Estimated number of workers with exposures reduced to TWA by substitution or engineering controls	Estimated number of workers in air-supplied respirators due to standard	Percent of total exposed workers in ASRs due to standard	Estimated number of full-time equivalent workers in ASRs due to standard	FTE workers in ASRs due to standard as percent of total workers
Manufacture of glycol ethers	334	330	14	4	7	2
Manufacture of chemical intermediates	80	80	0	0	0	0
Formulation of paints and coatings	2,475	2,637	108	4	26	1
Aircraft manufacturing/repainting	1,998	1,488	510	26	255	13
Motor vehicle body manufacturing	736	736	0	0	0	0
Other metal applications	1,464	1,243	221	15	221	15
Automobile refinishing	26,331	25,893	438	2	54	*0
Wood furniture manufacturing	8,140	7,384	756	9	152	2
Formulation of inks	946	894	52	5	20	2
Application of inks	946	946	0	0	0	0
Semiconductor manufacturing	1,704	1,704	0	0	0	0
Printed circuit board manufacturing	352	306	46	13	12	4
Total	45,786	43,641	2,145	5	795	2

* More than zero, but less than 0.5%.
Source: PEI.

TABLE VIII–9.—METHODS OF CONTROLLING EMPLOYEE EXPOSURES (ARITHMETIC MEAN APPROACH)

Industry category	Estimated total exposed workers	Estimated number of workers with exposures reduced to TWA by substitution or engineering controls	Estimated number of workers in air-supplied respirators due to standard	Percent of total exposed workers in ASRs due to standard	Estimated number of full-time equivalent workers in ASRs due to standard	FTE workers in ASRs due to standard as percent of total workers
Manufacture of glycol ethers	344	315	29	8	10	3
Manufacture of chemical intermediates	80	68	12	15	3	4
Formulation of paints and coatings	2,745	2,637	108	4	26	1
Aircraft manufacturing/repainting	1,998	1,488	510	26	255	13
Motor vehicle body manufacturing	736	736	0	0	0	0
Other metal applications	1,464	1,216	248	17	248	17
Automobile refinishing	26,331	25,600	731	3	91	*0
Wood furniture manufacturing	8,140	7,384	756	9	152	2
Formulation of inks	946	894	52	5	20	2
Application of inks	946	930	16	2	5	1
Semiconductor manufacturing	1,704	1,704	0	0	0	0

TABLE VIII–9.—METHODS OF CONTROLLING EMPLOYEE EXPOSURES (ARITHMETIC MEAN APPROACH)—Continued

Industry category	Estimated total exposed workers	Estimated number of workers with exposures reduced to TWA by substitution or engineering controls	Estimated number of workers in air-supplied respirators due to standard	Percent of total exposed workers in ASRs due to standard	Estimated number of full-time equivalent workers in ASRs due to standard	FTE workers in ASRs due to standard as percent of total workers
Printed circuit board manufacturing	352	306	46	13	12	4
Total	45,786	43,278	2,508	5	822	2

*More than zero, but less than 0.5%.
Source: PEI.

Costs of the Proposed Regulation

OSHA has preliminarily determined that the proposed standard is economically feasible. It is performance-oriented. Employers may choose any combination of engineering and work practice controls, or substitution of other chemicals for glycol ethers, to reduce exposures to or below the proposed TWAs and ELs.

Table VIII–10 shows estimated first year costs by industry category. All substitution costs are expected to be incurred in the first year only. By substituting, establishments would avoid all other costs in the first year, as well as all costs in future years.

Total first-year regulatory costs (substitution and compliance) would be $30.7 million under the geometric mean approach or $30.9 million under the arithmetic mean approach.

Total substitution costs exceed total compliance costs, primarily because of the large amount of substitution that would occur in formulation of paints and coatings. The highest first-year cost is estimated for the paints and coatings formulation category. Substitution occurs in all industry categories except the manufacturing of glycol ethers and chemical intermediates; however, substitution costs occur in only four categories: formulation of paints and coatings, formulation of inks, semiconductor manufacturing, and printed circuit board manufacturing.

TABLE VIII–10.—FIRST YEAR COSTS OF PROPOSED STANDARD, BY INDUSTRY CATEGORY

Industry Category	Geometric mean approach			Arithmetic mean approach		
	Cost of compliance* ($000)	Cost of substitution** ($000)	Cost of regulation ($000)	Cost of compliance* ($000)	Cost of substitution** ($000)	Cost of regulation ($000)
Manufacture of glycol ethers	67	0	67	85	0	85
Manufacture of chemical intermediates	40	0	40	47	0	47
Formulation of paints and coatings	556	15,400	15,956	559	15,400	15,959
Aircraft manufacturing/repainting	695	0	695	695	0	695
Motor Vehicle Body Manufacturing	57	0	57	66	0	66
Other metal applications	903	0	903	997	0	997
Automobile refinishing	5,866	0	5,866	5,866	0	5,866
Wood furniture manufacturing	997	0	997	997	0	997
Formulation of inks	136	3,900	4,036	139	3,900	4,039
Application of inks	67	0	67	103	0	103
Semiconductor manufacturing	525	650	1,175	525	650	1,175
Printed circuit board manufacturing	217	600	817	249	600	849
Total	10,124	20,550	30,674	10,328	20,550	30,878

*The first year costs of engineering controls are annualized; costs of workplace monitoring, medical surveillance and recordkeeping are estimated to be higher during the first year than they will be in subsequent years.
**Although substitution costs are incurred in only four industry categories, substitution takes place in all industry categories except manufacture of glycol ethers and manufacture of chemical intermediates.
Source: PEI.

Table VIII–11 shows estimated annual costs by industry category. These total $7.2 million (geometric mean approach) or $7.4 million (arithmetic mean approach). The highest annual cost is estimated to be for the automobile refinishing category. This is due to the large number of establishments; other industry categories have higher per-establishment recurring costs.

Table VIII–12 shows estimated first year and annual costs by requirement. Substitution is the most significant component of the first year costs. Engineering controls (annualized) and exposure monitoring are the most significant components of annual costs.

TABLE VIII–11.—ANNUAL COSTS OF PROPOSED STANDARD, BY INDUSTRY CATEGORY

Industry category	Geometric mean approach	Arithmetic mean approach
	Total cost ($000)	Total cost ($000)
Manufacture of glycol ethers	15	20

TABLE VIII–11.—ANNUAL COSTS OF PROPOSED STANDARD, BY INDUSTRY CATEGORY—Continued

Industry category	Geometric mean approach Total cost ($000)	Arithmetic mean approach Total cost ($000)
Manufacture of chemical intermediates	18	23
Formulation of paints and coatings	418	421
Aircraft manufacturing/repainting	525	525
Motor vehicle body manufacturing	21	21
Other metal applications	683	757
Automobile refinishing	4,254	4,254
Wood furniture manufacturing	762	762
Formulation of inks	106	109
Application of inks	34	59
Semiconductor manufacturing	244	244
Printed circuit board manufacturing	125	157
Total	7,205	7,353

Source: PEI.

TABLE VIII–12.—FIRST YEAR AND ANNUAL COSTS OF PROPOSED STANDARD, BY REQUIREMENT

Regulatory requirement	Geometric mean approach First year ($000)	Geometric mean approach Annual ($000)	Arithmetic mean approach First year ($000)	Arithmetic mean approach Annual ($000)
Engineering controls	2,611	2,611	2,642	2,642
Protective clothing	707	707	707	707
Exposure monitoring	3,309	1,815	3,377	1,882
Medical surveillance	1,445	618	1,524	641
Respirator protection	763	763	784	784
Respirator fit testing	20	20	20	20
Regulated areas, signs, labels	22	22	23	23
Hygiene facilities	160	160	160	160
Information and training	194	194	194	194
Housekeeping	37	37	37	37
Recordkeeping	857	259	860	262
Total compliance costs	10,124	7,205	10,328	7,353
Substitution costs	20,550	0	20,550	0
Grand total	30,674	7,205	30,878	7,353

Source: PEI.

Economic Feasibility Analysis

OSHA preliminarily determines that companies in the industries involved in this rulemaking should be able to absorb the costs of compliance with the proposed standard without experiencing undue burden. In addition, OSHA also preliminarily determines that the compliance costs of this rulemaking will not threaten massive dislocation in any of the affected industries, will not threaten the competitive stability of any of the affected industries, and will not lead to undue concentration in any of the industries. See *American Iron and Steel Institute* v. *OSHA*, 939 F. 2d 975, 980 (D.C. Cir. 1991; *United Steelworkers of America* v. *Marshall*, 647 F.2d 1189, 1265–66 (D.C. Cir. 1980), *cert. denied*, 453 U.S. 913 (1981). Therefore, OSHA preliminarily concludes that it is economically feasible to achieve the proposed standard by means of engineering and work practice controls and substitution.

PEI compared regulatory costs to financial and economic parameters to determine the impacts of a revised standard for glycol ethers on affected industries. They examined the extent to which establishments can pass costs of regulation on to their customers, absorb costs that cannot be passed on, and finance capital and up-front regulatory costs. They also analyzed the impacts of regulatory requirements on competition and the differential impacts on small businesses. Information for these analyses was obtained from Dun & Bradstreet industry financial profiles and various reports issued by the Commerce Department. Industrywide impacts of first year and recurring costs of the proposed standard are shown in Tables VIII–13 and VIII–14.

TABLE VIII.–13.—INDUSTRY-WIDE IMPACTS OF FIRST YEAR* COSTS OF PROPOSED STANDARD

Industry category	Geometric mean approach			Arithmetic mean approach		
	First year regulatory costs			First year regulatory costs		
	Thousands	As percent of revenue	As percent of profit	Thousands	As percent of revenue	As percent of profit
Manufacture of glycol ethers	$67	0.04	1.71	$85	0.05	2.17
Manufacture of chemical intermediates	40	0.21	8.25	47	0.24	9.76
Formulation of paints and coatings	15,956	1.05	16.41	15,959	1.05	16.42
Aircraft manufacturing/repainting	695	0.01	0.43	695	0.01	0.43
Motor vehicle body manufacturing	57	0.001	0.02	66	0.001	0.02
Other metal applications	903	0.06	1.07	997	0.07	1.18
Automobile refinishing	5,866	0.02	0.25	5,866	0.02	0.25
Wood furniture manufacturing	997	0.09	0.96	997	0.09	0.96
Formulation of inks	4,036	1.15	27.25	4,039	1.15	27.28
Application of inks	67	0.02	0.25	103	0.03	0.38
Semiconductor manufacturing	1,175	0.04	0.55	1,175	0.04	0.55
Printed circuit board manufacturing	817	0.27	2.77	849	0.28	2.88
Total	30,674	0.05	0.90	30,878	0.05	0.91

* First year costs of engineering controls are annualized; costs of workplace monitoring, medical surveillance, and recordkeeping are estimated to be higher during the first year than they will be in subsequent years.

Source: PEI.

TABLE VIII–14.—INDUSTRY-WIDE IMPACTS OF ANNUAL COSTS OF PROPOSED STANDARD

Industry Category	Geometric mean approach			Arithmetic mean approach		
	Annual regulatory costs			Annual regulatory costs		
	(Thousands)	As percent of revenue	As percent of profit	(Thousands)	As percent of revenue	As percent of profit
Manufacture of glycol ethers	$15	0.01	0.38	$20	0.01	0.51
Manufacture of chemical intermediates	18	0.09	3.68	23	0.12	4.79
Formulation of paints and coatings	418	0.03	0.43	421	0.03	0.43
Aircraft manufacturing/repainting	525	0.01	0.32	525	0.01	0.32
Motor Vehicle body manufacturing	21	0.0004	0.01	21	0.0004	0.01
Other metal applications	683	0.04	0.81	757	0.05	0.90
Automobile refinishing	4,254	0.01	0.18	4,254	0.01	0.18
Wood furniture manufacturing	762	0.07	0.73	762	0.07	0.73
Formulation of inks	106	0.03	0.72	109	0.03	0.74
Application of inks	34	0.01	0.13	59	0.02	0.22
Semiconductor manufacturing	244	0.01	0.11	244	0.01	0.11
Printed circuit board manufacturing	125	0.04	0.42	157	0.05	0.53
Total	7,205	0.01	0.21	7,353	0.01	0.22

Source: PEI.

Substitution is not believed to place a significant burden on those firms which would be able to use that method of responding to the proposed regulation. Substituting firms would fund substitution costs in the first year of the proposed regulation; there would be no recurring substitution costs.

For those firms which do not choose to substitute, compliance costs should not pose a significant problem. In most cases, costs can be recovered through a price increase. Possible exceptions are automobile refinishing and wood furniture manufacturing. If complying wood office furniture makers cannot increase prices, their compliance costs would cause their net income to decline by as much as 11 percent under the proposed standard. If complying automobile repair shops and paint shops cannot increase prices, their net income could decline by as much as 13 percent under the proposed standard. In general, automobile refinishers should be able to accommodate these impacts. However, they would likely present a financial hardship for some operations with marginal profits.

Regulatory Flexibility Analysis

The revised standards would have a greater impact on small than average-sized businesses because compliance costs would not necessarily be proportional to establishment size. Thus, small establishments would have a greater incentive to substitute than would larger establishments. Because of their comparatively small size (revenue of $400,000 or less), small printed circuit board manufacturers within the electronics industry could encounter difficulty financing the up-front costs of substitution. However, small semiconductor operations (also within the electronics sector) should have no trouble complying; at most, a price increase of only 0.2 percent would be needed to recover compliance costs. In the absence of a price increase, net income would decline by 2.4 percent for this industry category.

If small printed circuit board manufacturers cannot achieve price increases of from 0.5 to 0.8 percent to recover costs of the proposed standard, their earnings would decline by 5 to 8 percent.

IX. Environmental Impact

Introduction

OSHA has preliminarily determined that no significant environmental impact will result from the lower PELs and ancillary provisions being considered for the four glycol ethers—2-methoxyethanol (2–ME), 2-methoxyethanol acetate (2–MEA), 2-ethoxyethanol (2–EE), and 2-ethoxyethanol acetate (2–EEA). The principal source for this analysis is a study conducted for OSHA by PEI Associates, Inc., Technological Feasibility and Economic Impact Assessment of A Proposed Revision to the Glycol Ethers Standards, 110, OSHA Docket, Ex. 5–164.

PEI determined on the basis of survey results and site visits that the following six substances (all of them also glycol ethers) are the most frequently used substitutes for 2–ME, 2–MEA, 2–EE and 2–EEA: ethylene glycol monopropyl ether and its acetate, ethylene glycol monobutyl ether and its acetate, and propylene glycol monomethyl ether and its acetate. The potential for environmental impact resulting from these six substitutes is examined.

Air Emissions

The major Federal air pollution regulation that affects glycol ether users or manufacturers is 40 CFR part 60, New Source Performance Standards (NSPS), which covers volatile organic compounds (VOCs). Users or manufacturers of glycol ethers regulated under this standard are Automobile and Light Truck Surface Coating, Graphic Arts and Rotogravure Printing, Synthetic Organic Chemicals Manufacturing and Surface Coating of Large Appliances.

Mono-, di- and tri-ethers of ethylene glycol and their acetates are listed as toxic chemicals under section 313 of the Emergency Planning and Community Right-to-Know Act (Title III of the Superfund Amendments and Reauthorization Act of 1986), which requires recordkeeping and reporting of emissions for all chemicals listed for facilities meeting the threshold requirements of the Act. Thus, the major substitutes for the glycol ethers would be covered by Section 313 in the same manner as are the glycol ethers.

For industries that use or manufacture glycol ethers and their substitutes, Federal regulations will prevent increases in emissions beyond those now permitted. Also, the glycol ethers and their major substitutes have low vapor pressures, which results in low concentrations in air exhaust streams. Thus, no incremental air environmental impact is likely to occur as a result of reductions in the workplace exposure limit.

Glycol ether-using industries that are not subject to NSPS Federal regulations (such as the electronics industry) use some engineering controls to control workplace air concentrations, but do not appear to use emission controls. That portion of the glycol ethers used that does not remain with the product eventually evaporates and may enter the environment.

OSHA action to reduce workplace levels is projected to increase the trend to substitute other substances for glycol ethers. This substitution should reduce the quantity of glycol ethers entering the environment. The substitutes are generally less toxic than the four glycol ethers under study and are expected to have little environmental impact.

Water Emissions

Because of the way glycol ethers are used, a water pollution problem does not appear likely. Neither the glycol ethers nor their substitutes are subject to pretreatment standards that regulate discharges of industrial waste or municipal sewage to publicly owned treatment works. State and local standards regarding biological oxygen demand and chemical oxygen demand should be sufficient to prevent any increase in releases to water that might occur as a result of more stringent occupational exposure limits. Thus, no negative impact on the environment is projected.

X. Summary and Explanation of the Proposed Standard

OSHA believes that the proposed requirements set forth in this notice are necessary and appropriate to provide adequate protection to employees exposed to ethylene glycol ethers based on currently available information. Numerous reference works, journal articles, and other data obtained by OSHA have been taken into consideration in the development of this proposed standard.

Scope and Application: Paragraph (a)

The proposed standard would apply to all occupational exposures to the ethylene glycol ethers 2–Methoxyethanol (2–ME), 2–Ethoxyethanol (2–EE), and their respective acetates 2–Methoxyethanol Acetate (2–MEA), and 2–Ethoxyethanol Acetate (2–EEA) except where the exposure occurs from (1) liquid mixtures which contain less than 1%, by volume, of the above compounds unless the employer has reason to believe that such mixtures could release vapors in quantities sufficient to result in an airborne concentration which meets or exceeds the ALs or ELs of the compounds or could present a hazard through dermal contact; and (2) solids made from or containing 2–ME, 2–MEA, 2–EE, or 2–EEA that are incapable of releasing these compounds into the workplace air at or above the ALs or above the ELs.

The exemption for liquids with less than 1% glycol ethers is consistent with the Hazard Communication Standard (HCS), 29 CFR 1910.1200, paragraph (g)(2)(C)(1), which does not require inclusion of a non-carcinogenic chemical on a Material Safety Data Sheet (MSDS) if it comprises less than 1% of the composition of the mixture. However while OSHA believes, in general, that liquid mixtures containing less than 1% glycol ethers may present little hazard, there may be situations where the mixture, despite its low concentration of glycol ethers, might release vapors at or above the action levels or above the excursion levels or present a hazard through dermal contact. For example a large volume of a mixture containing less than 1% of glycol ethers may be released (e.g. spill or tank rupture) and give rise to high airborne levels of the glycol ethers by virtue of the large volume of mixture that is released. Also a work practice involving a prolonged or repeated dermal contact to a mixture containing less than 1% glycol ethers could provide enough exposure to the glycol ethers in the mixture to result in a significant dermal exposure. Thus it is proposed that if an employer has reason to believe that liquid mixtures with less than 1% glycol ethers could release glycol ethers vapors in concentrations at or above the action levels or above the excursion levels or could present a hazard through dermal contact, then that employer must comply with all provisions of the standard for glycol ethers. An employer's belief of the potential for such occurrences may be based on such things as information from a manufacturer or trade association or the employer's knowledge about chemical processes or work practices in his workplace.

OSHA also proposes that solids made from or containing glycol ethers that are capable of releasing those glycol ethers into the workplace air at or above the action levels or above the excursion levels are also exempt from the scope of this standard. In general glycol ethers are used as solvents in compounds which are used in the workplace. During the use of these compounds, the glycol ethers evaporate. Thus upon drying there is no glycol ether left in the

dried compound which could give off gas vapors to the workplace air. Since these solids would present little hazard, it is proposed that they be exempted from the scope of the standard. However, if there are situations where solids containing glycol ethers could release vapors at or above the action levels or above the excursion levels, then these solids would be covered under the scope of the standard. OSHA is unaware of any such situations and requests information on the existence of such occurrences in the workplace.

This proposed standard covers only the four ethylene glycol ethers (2–ME, 2–MEA, 2–EE, and 2–EEA) referred to OSHA by EPA under section 9(a) of the TSCA. In the ANPR for these substances OSHA discussed the possibility of expanding the scope of the rulemaking to cover other glycol ethers. In that notice, OSHA stated that, based on their similarities in structure and routes of metabolism, the adverse effects of at least some of the other glycol ethers may be similar to 2–ME, 2–EE and their acetates. For these reasons OSHA stated that it might be appropriate to include other glycol ethers within the scope of a proposed standard for glycol ethers.

Several commentors to the ANPR (Exs. 7–11, 7–12, 7–13, 7–14, 7–16, 7–17, 7–18, 7–20, 7–21, 7–23, 7–24 and 7–28) did not support expanding the scope of the rulemaking. In general these commentors stated that because of the differences in the toxicities between the four subject glycol ethers and longer chain glycol ethers, they did not believe that it was appropriate to promulgate a generic standard for all glycol ethers. In particular, ARCO (Ex. 7–19) stressed the differences between ethylene glycol ethers and propylene glycol ethers. ARCO presented statements and evidence that propylene glycol ethers are metabolized by different pathways than the ethylene glycol ethers resulting in different primary metabolites of lesser toxicity. Furthermore, ARCO added that the propylene glycol ethers have not been shown to induce adverse reproductive and/or developmental effects similar to 2–ME, 2–EE and their acetates. NIOSH (Ex. 7–22) stated that in general they would support a generic approach to rulemaking. However, in the case of other glycol ethers they stated that the data were limited and therefore they recommended one standard with two PELs, one for 2–ME/2–MEA and one for 2–EE/2–EEA. Two commentors to the ANPR, TVA and Public Citizen (Exs. 7–15 and 7–25), did support a generic glycol ethers standard, stating that the effects may potentially be similar for other glycol ethers.

As discussed in Section V—Health Effects, OSHA believes that the data are limited on the toxicity for glycol ethers other than 2–ME, 2–EE and their acetates. The data which are available, indicate that toxicities, as well as the uses of other glycol ethers, may vary to such an extent that a generic standard for all glycol ethers may be inappropriate. For this reason the scope of this proposal is limited to occupational exposure to 2–ME, 2–EE and their acetates. OSHA requests comments on this approach. In particular, the Agency is interested in health effects data on other glycol ethers.

OSHA is also proposing that construction be included under the scope of the standard, by amending section 1910.19 to add a new paragraph (n) for glycol ethers. OSHA's reasoning is as follows. Firstly, based on current evidence, OSHA believes that the proposed standard would have little impact on construction. However a significant source of exposure may occur in maintenance operations at facilities that manufacture, formulate or use glycol ethers or liquids containing glycol ethers. Exposure during these operations may be relatively high and it is necessary, therefore, that employees wear respirators, receive medical examinations and be protected by the other provisions of the proposed glycol ethers standard. Sometimes such facilities hire outside contractors to perform maintenance operations. The contention is sometimes made that the maintenance operations should be considered to be construction activities and not subject to general industry standards. Employees of such contractors are subject to the same levels of glycol ethers and need the same protection as other exposed employees. OSHA proposes to cover these employees under the glycol ethers standard.

Thus, although the impact of the standard will be limited, OSHA believes that construction should not be exempted from the standard. OSHA believes that a loophole would be opened in the enforcement of the standard if construction were exempted. The distinction between maintenance and construction activities is often an ambiguous one. The independent contractors who perform maintenance clearly need to be covered. If construction were excluded, these maintenance contractors might argue that their work is "construction" and that they are not covered by the standard. By covering construction, this ambiguity does not arise. This approach is consistent with other standards (e.g., Ethylene Oxide, 29 CFR 1910.1047 and Benzene, 29 CFR 1910.1028). OSHA requests comments on this approach for glycol ethers. OSHA also welcomes data on the exposure and use of glycol ethers in the construction industry which may be different from those in general industry.

Definitions: Paragraph (b)

"Action level" is defined as an airborne concentration of 0.05 ppm for 2–ME and 2–MEA and an airborne concentration of 0.25 ppm for 2–EE and 2–EEA, calculated as an 8-hour time weighted average (TWA). For workers exposed at or above the action level, without regard to the use of respiratory protection, medical surveillance and air monitoring are required. Generally, where exposures are determined to be below the action levels of 0.05 ppm (2–ME, 2–MEA) and 0.25 ppm (2–EE, 2–EEA), no further action is required of the employer except provision of training as required by paragraph (m) of this section and provision of appropriate personal protective equipment as required by paragraph (h) of this section.

Measurements of employee exposure can vary considerably for a number of reasons including process variations, sampling and analytical methods limitations, and seasonal changes. Therefore, even if all the measurements taken on a given day fall below the 8-hour time weighted average (TWA) permissible exposure limit, the possibility exists that on unmeasured days an employee's actual exposure may exceed the TWA. More explicitly, when measured exposure levels are over one-half of the TWA, the employer cannot have a high degree of confidence that employees are not overexposed to glycol ethers during unmeasured periods of the work week. Conversely, when the measured concentrations are below the action level, the employer can have a reasonable degree of confidence that the TWA is not being exceeded on days when exposure measurements are not being performed.

Based on the above concept, the action level provides a means of triggering various provisions of the proposed regulation relative to the exposure levels of employees. This approach increases cost-effectiveness and performance orientation of the standard while enhancing employee protection. For example, it is proposed that employers who maintain employee exposure below the action level be relieved of the obligations of further monitoring and medical surveillance of those employees. Employers are thereby encouraged to develop cost-effective,

innovative approaches for reducing employee exposures below the action level in order to eliminate the expense of implementing certain provisions of the standard. Employees will benefit by improved protection since their exposures will be less than one-half of the TWA permissible exposure limit. In addition, employers can focus their attention on employees whose exposure levels may be significant. Those employees exposed at or above the action level will have the added protection of medical surveillance, monitoring, and other provisions of the proposed standard.

The use of action levels to trigger provisions of the proposed standard and the setting of the action level at one-half of the TWA is consistent with other OSHA health standards, such as Asbestos (51 FR 22612, June 20, 1986; 29 CFR 1910.1001), Benzene (52 FR 34460, September 11, 1987; 29 CFR 1910.1028), and Formaldehyde (52 FR 46168, December 4, 1987; 29 CFR 1910.1048). This uniformity provides administrative consistency and continuity in developing and implementing compliance strategies for this and other applicable OSHA health standards at individual worksites.

"Authorized Person" means any person specifically authorized by the employer, whose duties require the person to enter a regulated area, or any person entering such an area as a designated representative of employees for the purpose of exercising the right to observe monitoring and measuring procedures under paragraph (d) of this section, or any other person authorized by the Act or regulations issued under the Act. Examples of such people would include, but are not limited to, employees who normally work in the regulated area, union representatives, and OSHA compliance officers.

"Emergency" is defined to mean any occurrence such as, but not limited to, equipment failure, rupture of containers, or failure of control equipment which may or does result in an unexpected release of a significant amount of glycol ethers. Every spill or leak does not automatically constitute an emergency situation. The exposure to employees must be high as well as unexpected. This is a performance-oriented definition relying upon judgment.

"Employee exposure" is defined as that exposure to airborne or liquid glycol ethers which would occur if the employee were not using respiratory protective equipment or other personal protective equipment. This definition is consistent with OSHA's previous use of the term in other standards.

"Ethylene Glycol Ethers" for the purposes of this section, means 2-Methoxyethanol (2-ME) (CAS No. 109-86-4), 2-Methoxyethanol acetate (2-MEA) (CAS No. 110-49-6), 2-Ethoxyethanol (2-EE) (CAS No. 110-80-5), and 2-Ethoxyethanol acetate (2-EEA) (CAS No. 111-15-9). The family of ethylene glycol ethers is comprised of a large number of compounds. At the present time, however, this proposed standard will deal with only those four compounds noted above. These four chemicals are also known by a variety of chemical and trade names. Therefore, to eliminate confusion as to which compounds are being considered for regulation, they have also been identified by their CAS number. This number is assigned by the Chemical Abstract Service and, without regard to system of chemical nomenclature or trade name, is unique to a specific chemical. A detailed discussion of the chemical properties of these compounds can be found in Section IV, "Chemical Identification, Production and Use of Ethylene Glycol Ethers" of this document.

"Glycol Ethers" is defined the same as "Ethylene glycol ethers" above and for the purpose of the document is used interchangeably with the above term.

"Objective Data" means information demonstrating that a particular product or material containing glycol ethers or a specific process, operation, or activity involving glycol ethers cannot release glycol ethers in airborne concentrations at or above the action level or above the excursion limit or result in dermal exposure, even under worst-case release conditions of foreseeable use. A more detailed discussion of "objective data" can be found in paragraph (d), Exposure Monitoring, of this section.

"Regulated Area" means any area where airborne concentrations of glycol ethers exceed or can reasonably be expected to exceed the permissible exposure limits, either the 8-hour time-weighted average (TWA) permissible exposure limits of 0.1 ppm (2-ME, 2-MEA) and 0.5 ppm (2-EE, 2-EEA) or the 15-minute excursion limits (EL) of 0.5 ppm (2-ME, 2-MEA) and 2.5 ppm (2-EE, 2-EEA). Regulated areas must be established anytime the airborne concentration of glycol ethers exceeds or can be expected to exceed the TWAs and/or ELs. Their existence may be of extended duration, such as when currently feasible engineering and work practice controls are inadequate to lower airborne glycol ether concentrations below the PELs, or they may exist for only a short period of time as could be expected during a maintenance operation. Requirements specifically pertaining to regulated areas are found in paragraph (e) of this section.

Permissible Exposure Limits: Paragraph (c)

OSHA proposes, in paragraph (c)(1), to establish new permissible exposure limits for ethylene glycol ethers by amending the current standards found in 29 CFR 1910.1000, Table Z-1-A, which are 8-hour time weighted averages (TWAs) of 200 ppm for 2-EE, 100 ppm for 2-EEA, and 25 ppm for both 2-ME and 2-MEA. OSHA is proposing new permissible exposure limits of 0.1 ppm for 2-ME and 2-MEA and 0.5 ppm for 2-EE and 2-EEA calculated as an 8-hour TWA. In addition, the Agency is proposing, in paragraph (c)(2), 15-minute excursion limits (ELs) of 0.5 ppm (2-ME, 2-MEA) and 2.5 ppm (2-EE, 2-EEA). These limits are the airborne concentration, averaged over a 15-minute sampling period, resulting from monitoring conducted during an employee's anticipated highest level of exposure.

OSHA has proposed to amend the current TWAs based upon evidence that occupational exposure to ethylene glycol ethers at the current standards presents a significant risk of adverse hematologic, reproductive and developmental effects while the proposed TWAs would achieve a significant reduction in that risk. The basis for this action is discussed in the significance of risk, health effects, and feasibility sections preceding this section. Overall, however, OSHA has made the preliminary determination that the proposed TWAs reduce significant risk and are feasible.

In conjunction with the 8-hour TWAs, OSHA is proposing 15-minute excursion limits for these ethylene glycol ethers in paragraph (c)(2). The Agency feels that establishing ELs will further reduce significant risk. As discussed in the preliminary risk assessment section, the proposed TWAs of 0.1 ppm for 2-ME and 2-MEA and 0.5 ppm for 2-EE and 2-EEA were derived by dividing the NOELs from experimental studies by uncertainty factors of 100. OSHA believes that using an uncertainty factor of 100 results in a level at which workers will be less likely to experience adverse reproductive or developmental effects such as those observed in animal studies. However, it should be kept in mind that these levels (0.1 and 0.5 ppm) represent eight-hour time weighted averages. Thus, it is possible that the levels for 2-ME/2-MEA and 2-EE/2-EEA could reach as high as 3.2 ppm or 16.0 ppm, respectively, for any 15-minute period and still meet the 8-hour

TWAs of 0.1 and 0.5 ppm, provided that there are no other exposures in the 8-hour period. Under this exposure scenario, the uncertainty factor is lowered from 100 to approximately 3. This reduction in the margin of safety may be important in the case of reproductive and developmental effects where peak doses rather than cumulative doses may play an important role in the biological effects. For example, peak doses occurring at critical periods of fetal or spermatogenic development may induce adverse effects due to the sensitivity of that particular period of development. Thus, OSHA believes that it is important to reduce peak exposures to the extent possible. Implementing excursion limits five times the TWAs (i.e., 0.5 for 2–ME/2–MEA and 2.5 ppm for 2–EE/2–EEA) will decrease the reduction in the uncertainty factors and thus provide a greater likelihood that workers will not suffer an adverse reproductive or developmental effect from exposure.

While OSHA is proposing 15-minute excursion limits of 5 times the respective TWAs, it should be noted that paragraph (c)(2)(A) prohibits an employee's exposure from exceeding the TWAs through such 15-minute exposures. Therefore, even though an employee receives his/her exposure in short bursts, the overall exposure level cannot exceed the TWAs when the excursion limit exposures are calculated as an 8-hour time weighted average. In addition, when an employee's 15-minute excursion exposures, calculated as an 8-hour time weighted average, are at or above the action level, then all provisions of this section which are triggered at the action level must be implemented for that employee.

In addition to exposure by inhalation, glycol ethers are readily absorbed through the skin. As a result, both the OSHA PELs and the American Conference of Governmental Industrial Hygienists (ACGIH) TLVs carry a "skin" notation for the four glycol ethers under consideration. Studies have shown that dermal absorption of these compounds, either alone or in conjunction with inhalation exposure, is capable of inducing adverse effects in animals and/or humans (Exs. 4–121, 4–139, 5–049, 5–073). The Agency, therefore, has proposed in paragraph (c)(3) that the employer assure that no employee is exposed to glycol ethers through dermal contact.

Exposure Monitoring: Paragraph (d)

Paragraphs (d)(1) through (d)(7) of the proposed standard would impose monitoring requirements pursuant to Section 6(b)(7) of the OSH Act (29 U.S.C. 655) which mandates that any standard promulgated under section 6(b) shall, where appropriate, provide for monitoring or measuring of employee exposure at such locations and intervals, and in such manner as may be necessary for the protection of employees.

The Agency believes that the employer's knowledge of exposures existing among employees is fundamental to the provision of a healthful workplace. The purposes served by requiring initial and periodic air sampling for employee exposures to glycol ethers include: Prevention of employee overexposure; determination of the extent of exposure at the worksite; identification of the sources of exposure to glycol ethers; collection of exposure data so that the employer can select the proper control methods to be used; and evaluation of the effectiveness of the selected methods. Monitoring enables employers to meet the legal obligation of the standard to ensure that their employees are not exposed to ethylene glycol ethers in excess of the prescribed levels and to notify employees of their exposure levels, as required by section 8(c)(3) of the Act. In addition, collection of exposure monitoring data enables the examining physician to be informed of the existence and extent of potential sources of occupational diseases.

Exposure monitoring is critical to determining the specific levels of glycol ethers to which employees are exposed. A number of obligations are delineated by specific exposure levels above which certain provisions have to be implemented to protect the employees and achieve compliance with the standard. Medical surveillance and exposure monitoring provisions of the standard are triggered, for example, for employees exposed at or above the AL or above the EL. The remaining provisions of the standard are triggered by employee exposure above the TWA.

The exposure monitoring provision of paragraph (d)(1)(i) would require each employer who has a workplace or work operation covered by this section to accurately determine employee exposure to ethylene glycol ethers. While initial evaluation of employee exposure would require either actual monitoring of each employee or the use of objective data, subsequent determinations may be carried out through representative sampling and would not necessarily entail sampling of all exposed employees.

Paragraph (d)(1)(ii) would require that these determinations be made from samples that are taken within the employee's breathing zone (personal samples) and which accurately reflect the employee's exposure, without regard to the use of respirators, to airborne concentrations of glycol ethers over an eight-hour period. This permits the employer to ascertain compliance with the ALs and the TWAs. In addition, the employer must monitor employees over a fifteen minute period to determine whether they are in compliance with the excursion limits (ELs) at operations where there is reason to believe that exposures may be above the ELs. Examples of situations which may present the potential for elevated short term exposures include, but are not limited to, where tanks are opened, filled, unloaded, or gauged; where containers or process equipment are opened; where glycol ethers are transferred between containers or added to mixtures in open systems; and where glycol ethers are used for cleaning or as a solvent in an uncontrollable situation as may be found, for example, in the cleaning of machinery where neither permanent nor temporary engineering or work practice controls are adequate to reduce the levels of glycol ethers to or below the ELs.

Paragraph (d)(1)(iii) would require the employer to determine TWA and EL employee exposures for each employee in each job classification, in each work area, and for each shift whenever exposure to glycol ethers exists. Except for the initial monitoring that would be required by this section, paragraph (d)(1)(iv) states that a representative sampling strategy may be developed which will measure sufficient exposure levels within each job classification or for each job task (if there is task variation within a job classification which could result in different exposure levels within that job classification) for each workshift, in each work area to correctly characterize and not underestimate the exposure of any employee within each exposure group. However, exposure levels shall be determined for each employee in each job classification in each work area for each shift unless the employer can document that exposure levels for a given job classification are equivalent for different work shifts.

Representative exposure sampling is permitted when there are a number of employees performing the same job function in the same job classification under the same conditions. For such employees, it may be sufficient to monitor some fraction of such employees in order to obtain data that are "representative" of the remaining employees. Representative personal sampling of these employees must include that member(s) of the exposed group reasonably expected to have the

highest exposure. This result can then be applied to the remaining employees of the group. In developing a representative sampling strategy, the employer must systematically examine process and workplace variables to identify which employees are to be monitored. Strategy development should include: (1) Investigation of worksites where the nature of the operation or process indicates possible release of glycol ethers into the work environment to identify the sources of these emissions; (2) investigation of worksites where there have been employee complaints or symptoms indicative of possible exposure to glycol ethers; (3) analysis of exposure patterns within the worksite, including each employee's distance from the source of glycol ethers, variations in tasks among employees in the same job classification, employee mobility, air movement patterns, and differences in work habits.

As stated in paragraph (d)(1)(v), objective data [as defined in paragraph (b)] may also be used by the employer to document that the presence of glycol ethers in the workplace or products containing glycol ethers cannot result in the release of airborne concentrations of glycol ethers that would cause any employee to be exposed at or above the action level or above the EL under worst-case release conditions of foreseeable use. If the employer can adequately demonstrate with objective data that the preceding conditions exist, then the employer is relieved of measuring employee exposure to glycol ethers.

A detailed discussion of "objective data" can be found in the final standard for Formaldehyde (52 FR 46255). Pertinent portions of that discussion are reproduced here for the sake of convenience and clarification.

* * * Employers can use data on physical properties, combined with information as to room dimensions, air exchange rates, and other pertinent data, including, for example, information on work practices, to estimate the maximum exposures that could be anticipated in the workplace. Relying on such an approach to estimate worker exposures from objective data requires the use of safety factors to account for uneven distribution of formaldehyde vapor in the air and the proximity of workers to emissions sources (Ex. 73–176). Objective data could also include historical data on employee exposures, area monitoring conducted to determine ambient formaldehyde levels and emissions from sources of formaldehyde releases, or carefully evaluated monitoring conducted for other than a full shift or 15-minute period. * * * OSHA recognizes that many workplace factors must be taken into account by employers relying on objective data (see 50 FR 50473). * * *

In retaining the objective data requirement, OSHA does not intend that employers engage in complex modeling exercises as a substitute for employee exposure monitoring, and the Agency recognizes that, in workplaces where many complex factors must be considered to use objective data, a high degree of uncertainty will be associated with trying to assess employee exposures from objective data. In these instances, employers should conduct exposure monitoring instead of relying on objective data so that they can have confidence that they are in compliance with the standard's provisions.

Moreover, in workplaces where many complex factors combine to influence employee exposures to formaldehyde, employers may find it easier, more useful, and less costly to monitor rather than to try to evaluate employee exposures through generation and evaluation of objective data * * *

Briefly summarizing the above discussion, a number of workplace factors must be taken into account when relying on objective data (e.g. temperature, humidity, ventilation rate, employee proximity to contaminant source), however, it is not the Agency's intent that employers engage in complex modeling exercises in place of employee exposure monitoring. In workplaces where a number of complex factors must be considered, the employer should conduct exposure monitoring, rather than relying upon objective data, to increase confidence that they are in compliance with the standard's provisions. Initial monitoring of workplace exposures would be required of all employers who have a place of employment covered under the scope of this standard. Paragraph (d)(2)(i) would require the employer to identify all employees who, without regard to respirator use, are exposed or may reasonably be anticipated to be exposed, at or above the action level or above the EL and to perform initial monitoring to accurately determine the exposure of employees so identified. The initial monitoring must be conducted within 60 days of the effective date of the final standard as set forth in paragraph (o)(2)(i). However, to relieve some of the monitoring burden and associated cost, paragraph (d)(2)(ii) of the proposal would permit an employer who has comparable and adequate workplace monitoring data gathered within 180 days prior to the effective date of the standard to rely on those data to satisfy the requirements of the initial monitoring. To meet the "comparable and adequate" intent of this provision, such monitoring data must have been gathered under conditions closely resembling those currently prevailing in the workplace, each employee must have been monitored, and the monitoring must satisfy all other requirements of this section including accuracy of the analytical method at the proposed action levels.

It should be noted that this provision would require initial monitoring to be performed for all employees who are potentially exposed to glycol ethers at or above the ALs or above the ELs. For the purpose of this section, representative sampling will not be an accepted method of initial monitoring. The reasoning behind this is that the permissible exposure limits for the 8-hour TWAs are being reduced to such an extent (e.g., from 25 ppm to 0.1 ppm for 2–ME) that the Agency does not believe that the initial assessment of employee exposure can be accurately determined through representative sampling. This approach is further supported when one considers that the action levels of these compounds are even lower, 0.05 ppm (2–ME, 2–MEA) and 0.25 ppm (2–EE, 2–EEA). At these levels, minor variations in employee work practices or job tasks, workplace ventilation, compound concentration, and so forth can affect the level of employee exposure and thereby implementation of various provisions of this proposal. It is OSHA's belief, therefore, that employee exposure levels relative to the TWAs, ELs, and ALs can be accurately determined only by conducting initial monitoring for each employee. The only exception to performing initial monitoring is the use of objective data as discussed in paragraph (d)(1)(v). In assembling objective data, however, it should be noted that the Agency would question historical data used to substantiate claims of exposure levels below the proposed action levels, since the proposed action levels are near the level of reliable quantitation of the 1985 OSHA analytical method for these substances (the proposed action level for 2–ME is actually below the level of quantitation or LOQ of the 1985 methodology). The level of quantitation (LOQ)/level of detection (LOD) discussion in the 1985 analytical method states: (Ex. 5–005)

The reliable quantitation limits and detection limits reported in the method are based upon optimization of the instrument for the smallest possible amounts of analytes. When target concentration of an analyte is exceptionally higher than these limits, they may not be attainable at the routine operating parameters.

Since the previous permissible exposure limits range from 25 ppm (2–ME/2–MEA) to 200 ppm (2–EE), it is doubtful that normal analytical procedures and apparatus would be optimized to achieve a target concentration at the

method's LOD/LOQ. Therefore, the Agency would seriously question the accuracy and reliability of historical monitoring results at such levels.

The outcome of the monitoring determines what subsequent action must be taken by the employer. If initial or periodic monitoring results show employee exposure to be below the action level, the employer may discontinue monitoring for that employee unless there is a change in production, equipment, process, personnel, control measures, or any other such factor which may result in new or additional exposure to glycol ethers. However, paragraph (d)(3)(i) stipulates that if initial monitoring reveals employee exposure to be at or above the AL or above the EL, then periodic monitoring must be initiated as discussed below and in paragraphs (d)(3)(ii) through (d)(3)(iv) of the proposed standard.

Periodic measurements are one of the most informative ways of detecting hazardous shifts in exposure concentrations, an indicator that engineering controls are not working properly or that good work practices are not being followed. The results of monitoring determine the monitoring frequency which must be adopted by the employer. Paragraph (d)(3)(ii) states that if the initial or periodic monitoring results show employee exposures at or above the AL, but at or below the TWA then the employer must repeat monitoring for these individuals at least every six months. As discussed previously, when monitoring results are above the action level, the employer can no longer be confident that employees are not being exposed over the TWA. Therefore, OSHA feels that periodic monitoring of employees exposed at or above the action level is necessary to assure employers that their employees are not overexposed.

If initial or periodic exposures are above the TWA then the employer must monitor every three months as would be required by paragraph (d)(3)(iii) of this section. Once employee exposures exceeding the TWA have been identified, the employer is obligated to implement measures directed at eliminating or minimizing those exposures. More frequent monitoring is warranted to determine the effectiveness of the measures in protecting workers.

Monitoring for the EL is generally to be carried out simultaneously with, and according to, the required monitoring frequencies discussed above. However, as stated in paragraph (d)(3)(iv), if an employee is exposed in excess of the EL, that employee shall be monitored at least every three months under conditions of highest exposure. As related previously in the discussion on excursion limits, exposure to short bursts of elevated levels of glycol ethers may play an important role in biological effects of these compounds. Therefore, protection against this type of exposure could be of equal concern compared to exposures exceeding the TWA. As a result, the same periodic monitoring frequency has been proposed for exposures in excess of either the TWAs or ELs.

OSHA believes these frequencies, which are similar to those required by other OSHA standards, such as Arsenic (43 FR 19854 May 5, 1978; 29 CFR 1910.1018) and Ethylene Oxide (49 FR 25734 June 22, 1984 and 53 FR 11414 April 6, 1988; 29 CFR 1910.1047), are necessary and sufficient for providing useful information to evaluate employees' exposures. Periodic re-monitoring provides the employer with assurance that employees are not experiencing higher exposures that may require the use of additional controls. In addition, these measurements remind employees and employers of the continued need to protect against the hazards which could result from exposure to glycol ethers.

Employees are further protected because additional monitoring would be required by paragraph (d)(4) when there has been a change in production, equipment, raw materials, process, personnel, or work practices which may result in new or additional exposures to glycol ethers at or above the ALs or above the ELs, or whenever the employer has any other reason to suspect that a change may result in new or additional exposures at or above the ALs or above the ELs.

OSHA recognizes that monitoring can be a time-consuming, expensive endeavor. Therefore, this proposal offers employers the incentive to minimize employees' exposures by allowing employers to discontinue monitoring for employees under certain conditions. It is hoped that such a provision will encourage employers to maintain their employees' exposures to glycol ethers below the Al and the EL, thus maximizing the protection of employees' health.

Paragraph (d)(5)(i) through (d)(5)(iii) would permit the employer to discontinue monitoring for an employee, except as noted otherwise in paragraph (d)(4) of this section, if the initial monitoring results show the employee's exposure to be below the AL and at or below the ELs. If periodic monitoring results indicate, by at least two consecutive measurements taken at least seven days apart, that employee exposures have fallen below the ALs, and are at or below the ELs, the employer may discontinue monitoring for those employees whose exposures are represented by such monitoring. However, the results must be statistically representative and consistent with the employer's knowledge of the job and work operation. Also, paragraph (d)(5)(iii) states that if the initial or periodic monitoring reveals the employee to be at or above the AL but, on two consecutive measurements taken at least seven days apart, the employee is not exposed above the EL, no further monitoring for the EL is necessary except as required by paragraph (d)(4) of this section.

When considering termination of monitoring an employee's exposure level, the employer should have reasonable confidence that the employee's exposure has truly been reduced below the AL and/or EL. Variations in job task, daily production, ventilation patterns, and so forth could result in a non-characteristically low exposure measurement and, if only one sample is considered, lead the employer to incorrectly deduce that the employee is no longer overexposed. To minimize the possibility of the occurrence of such an incorrect supposition, increase the employer's confidence in terminating monitoring, and to further protect employees against overexposure, the Agency would require that, at a minimum, the employer monitor the employee's exposure level a second time, at least seven days later, to confirm the reduced exposure level before termination of monitoring. This requirement is consistent with other recent OSHA standards.

Paragraph (d)(6) would require the employer to use monitoring and analytical methods which have an accuracy (at a confidence level of 95%) within plus or minus 25% for airborne concentrations of glycol ethers at or above the level being investigated. This is necessary to assure that 95 percent of the measurements are accurate to within plus or minus 25 percent of the "true" exposure level. OSHA has included this accuracy requirement in other toxic substance standards (Formaldehyde, 29 CFR 1910.1048). A method of measurement is presently available to detect ethylene glycol ethers to this degree of accuracy and is described in appendix (E). The proposed standard, in paragraph (d)(7), would require that employers notify each of their employees individually of the results of personal monitoring samples. This notification is to be given within 15 days of receipt of exposure monitoring results and is to be given in writing and

by posting a notice in an appropriate location accessible to affected employees. A written notice ensures that each employee is notified while posting the results ensures that employers and supervisors are aware of the results. Posting results also permits employees to compare their monitoring results with those of co-workers and results obtained from other shifts.

If the results of the monitoring show employee exposure to be in excess of the TWA and/or EL permissible exposure limits, the written notice to the employees shall include a statement that the TWA and/or EL has been exceeded and a description of the corrective action which is being taken by the employer to decrease the exposure to within the permissible exposure limits. This requirement to inform employees is in accordance with section 8(c)(3) of the OSH Act and is necessary to assure employees that the employer is making efforts to furnish them with a safe and healthful work environment.

As required by section 8(c)(3) of the Act (29 U.S.C. 657(c)(3)), this proposal contains provisions for employee observation of exposure monitoring. Paragraph (d)(8)(i) would require employers to provide affected employees or their designated representative with the opportunity to observe any monitoring of employee exposures to glycol ethers as required by this section. In paragraph (d)(8)(ii), observation procedures are set forth which would require the employer to provide the observer with the personal protective clothing and equipment (e.g. coveralls, gloves, respiratory protection, protective eyewear) that is required to be worn by the employees who are working in the area. In addition, the employer must ensure that the observer uses such clothing and equipment and complies with all other applicable safety and health procedures. This requirement ensures that the observer receives adequate protection from exposure to glycol ethers.

Regulated Areas: Paragraph (e)

In paragraph (e)(1), the proposed standard would require the employer to establish regulated areas wherever exposures to glycol ethers exceed or can be expected to exceed the TWA and/or EL permissible exposure limits. Such areas must be established even though no employee is routinely assigned to the area; the potential for overexposure is the determining factor.

The Agency feels that it is the existence of a hazard which is the basis for determining the need for protective measures rather than the type of operation being performed. Therefore, establishment of a regulated area is to be carried out not only for situations where the concentration of airborne glycol ethers must unavoidably exceed the permissible exposure limits for extended periods but also for areas where exposures are temporarily over either the TWA or EL for short periods, such as might be expected while maintenance is being performed. The establishment of regulated areas is consistent with good industrial hygiene practice as it provides an effective means of limiting excess exposure to as few employees as possible. In addition, the regulated area provision of this standard conforms with similar provisions in other OSHA health standards. It should also be noted that this requirement has additional benefits to employers in that by limiting access to these areas to only authorized persons, the employer's obligation to implement the provisions of this standard triggered by exposure above the TWAs or ELs is limited to a minimum number of employees.

The purpose of designating regulated areas is to ensure that employers make employees aware of the presence of glycol ethers in the workplace at levels above the permissible exposure limits, thereby helping to minimize the number of employees exposed and ensuring that employees who must enter the area are provided with training and appropriate personal protective equipment. Paragraph (e)(1)(i) would require that regulated areas be demarcated from the rest of the workplace in any manner that adequately establishes and alerts employees to the boundary of the regulated area while paragraph (e)(1)(ii) stipulates that these areas be posted at all entrances and accessways with signs meeting the requirements specified in paragraph (m)(1)(i) of this standard. To increase the performance orientation of the standard, no detailed requirements are specified on how regulated areas should be demarcated. However, it must be assured that the manner of demarcation chosen adequately alerts employees to the boundaries of the area. In addition, readily observable signs at all entrances and accessways serve to alert the employee not only to the existence of the regulated area but reminds them to use proper personal protective equipment and respiratory protection and to observe good personal hygiene practices, such as refraining from smoking or eating in regulated areas and washing hands and face after leaving the area.

The proposed standard also states, in paragraph (e)(2), that the employer shall limit access to regulated areas to only authorized persons. By limiting access to authorized persons only, the employer minimizes the number of persons exposed to glycol ethers. In addition, this requirement assures that only those persons who have been properly trained and utilize proper protective equipment are permitted into the area.

In paragraph (e)(3) of the proposal, it is stipulated that whenever an employer at a multi-employer worksite establishes a regulated area, that employer shall communicate the location and restrictions of access to the regulated area to other employers with work operations at that worksite. This requirement would lessen the possibility that unauthorized, unprotected people would enter the area and be inadvertently exposed. OSHA is concerned that employees at nearby sites be aware of the existence of the hazard and remain outside of the regulated area. Even though the signs posted by the first employer serve to warn employees of a second employer to stay out of the area, there is no assigned accountability for these employees. Therefore, if the second employer is aware of the hazards, then it is the responsibility of the second employer to assure that his employees do not enter the regulated area of the first employer without permission and proper protective equipment.

It would be required, under paragraph (e)(4) of the proposal, that each person entering a regulated area be provided with and required to use appropriate personal protective equipment, including respiratory protection selected in accordance with paragraph (g)(3). This provision is also consistent with other OSHA standards (e.g., Asbestos, 29 CFR 1910.1001). This provision applies not only to employees working "full time" in the regulated area but to any person entering the area. This approach provides a number of benefits: (1) "Walk through" by employees will be discouraged since use of appropriate personal protective equipment will be required of all persons entering the area; (2) employees whose duties require them to be in the area for a longer period of time than originally anticipated will be adequately protected since it eliminates the need for employees to estimate length of time in the regulated area and make individual decisions regarding personal protective equipment; and (3) enforcement will be simplified for the employer since the use of personal protective equipment will be uniformly required of all persons in the regulated area, regardless of the length of time they will be present in the area.

Methods of Compliance: Paragraph (f)

Paragraph (f)(1) of the proposed standard would require employers to institute engineering and work practice controls, to the extent feasible, as the primary means to reduce and maintain employee exposures to glycol ethers to levels at or below the TWAs or the ELs and to eliminate dermal exposure. Paragraph (f)(2) also requires employers, whenever they establish that feasible engineering and work practice controls are not sufficient to lower exposures to or below the TWAs or the ELs or to eliminate foreseeable dermal exposure, to nonetheless implement such controls to reduce employee exposures to the lowest levels achievable and then to provide supplemental personal protective equipment to eliminate dermal exposure and/or achieve the TWAs or ELs through the use of respirators that comply with the requirements of paragraph (g) of this proposed standard.

Engineering controls serve to reduce employee exposure in the workplace by either removing or containing the hazard or isolating the worker from exposure. These controls include, but are not limited to, process or equipment redesign (including substitution of glycol ethers with a less toxic chemical), installation of ventilation equipment (localized and/or general), process or equipment enclosure, and employee isolation. In general, engineering controls act on the source of the hazard and eliminate or reduce employee exposure without reliance on the employee taking self-protective action or intervention. Once implemented, engineering controls protect the employee, subject only, to periodic replacement or preventative maintenance.

Engineering controls are: reliable; provide consistent levels of protection to a large number of workers; are not dependent upon individual human performance; can be monitored continually/inexpensively; allow for predictable performance levels; remove hazards from the workplace. Once removed, the health hazard no longer poses a threat to the employee. Engineering controls are preferred by OSHA since they remove hazards from the workplace.

Engineering controls can be grouped into 3 categories: (1) Substitution, (2) isolation, and (3) ventilation, both general and localized. Quite often a combination of these controls can be applied to an industrial hygiene control problem to achieve satisfactory air quality. It may not be, and usually is not, necessary or appropriate to apply all these measures to any specific potential hazard.

Substitution should not be overlooked as an appropriate solution to an industrial hygiene problem. One of the best ways to keep people from being exposed to a toxic substance is to stop using it entirely. This is not always possible, but at least the following question should be asked: "Can a less toxic material be substituted in the process?" Other examples of substitution which may provide effective control of an air contaminant are changing from one type of process equipment to another, or even in some cases changing the process itself.

In general, a change in any process from a batch to a continuous type of operation carries with it an inherent reduction in potential hazard. This is true primarily because the frequency and duration of worker's potential contact with the process materials is reduced when the overall process approach becomes one of continuous operation. The substitution of processes can be applied on a fundamental basis. For example, substitution of airless spray for conventional spray equipment can reduce the exposure of a painter to toxic substances. Substitution of a paint dipping operation for the paint spray operation can reduce the potential hazard even further. In any of these cases the automation of the process can further reduce the potential hazard.

In addition to substitution, the principle of isolation should be considered. Although "isolation" is frequently envisioned as consisting of installation of a physical barrier between a hazardous operation and the workers, isolation can be provided without a physical barrier by appropriately placing the employee at greater distance from the source of the glycol ethers exposure and by controlling employees' exposures by scheduling work assignments when the fewest employees are present. Examples of this latter method would be operating a contaminant-producing operation at night in the absence of most of the employees. Clean-up operations in which toxic substances are involved sometimes can be performed at night in the absence of the usual production staff. Such methods of controlling worker exposures to contaminants by work assignment away from the contaminant are known as administrative controls.

Frequently the application of the principle of isolation maximizes the benefits of additional engineering concepts such as local exhaust ventilation. For example, the charging of mixers is the most significant operation in many processes that use formulated ingredients. When one of the ingredients in the formulation is of relatively high toxicity, it is worthwhile to isolate the mixing operation, that is, install a mixing room, thereby confining the airborne contaminants potentially generated by the operation to a small area rather than having them influence a larger area of the plant. By ensuring containment, the application of ventilation principles to control the contaminant at the source (i.e., the mixer) is much more effective.

Ventilation, applied as either a general or local control, is by far the most important engineering control principle available to the industrial hygienist. Its principal application is to maintain airborne concentrations of contaminants at acceptable levels in the workplace.

A local exhaust system is used to carry off an air contaminant by capturing it at or near its source, before it spreads throughout the workplace. Some examples of local ventilation systems include a canopy hood over a hot process, slot ventilation around the periphery of a vat, and a laboratory hood enclosure. General ventilation, on the other hand, lets the contaminant spread throughout the workroom but dilutes it by circulating large quantities of air into and out of the workroom. A local exhaust system is generally preferred to ventilation-by-dilution (general ventilation only) because it provides a cleaner and healthier work environment.

By comparison, work practice controls reduce the likelihood of exposure through alteration of the manner in which a task is performed such as how an employee positions himself/herself relative to the source and/or engineering control. While work practice controls also act on the source of the hazard, the protection they provide is based upon employer and employee behavior rather than installation of a physical device such as a ventilation system. Examples of some basic work practices include, but are not limited to, (1) limiting access to regulated work areas to authorized and specially-trained personnel with proper personal protective equipment, (2) drawing tank car samples from an upwind position, and (3) performing glycol ether analyses, such as quality checks, within a chemical fume hood.

In many instances, the two control methodologies discussed above work in tandem as it is often necessary to employ work practices to insure effective operation of engineering controls. For example, if an employee inappropriately performs an operation

outside of an exhaust hood then the protection afforded by the engineering control (i.e., the exhaust hood) will be of little or no use. As can be seen, therefore, in many situations it is important not only that an engineering control be functioning properly but also that employees are aware of the work practices that are necessary to assure effectiveness of the control.

Primary reliance on engineering controls and work practices is consistent with good industrial hygiene practice and with the Agency's traditional adherence to a particular hierarchy of preferred controls. This hierarchy specifies that engineering controls and work practices are to be used in preference to respirators. OSHA has traditionally relied less on respirators in the hierarchy of controls because there are so many problems associated with their use. Often work is strenuous and the increased breathing resistance of the respirator reduces its acceptability to employees. Safety problems are presented by respirators since they limit vision. In some difficult and dangerous jobs, effective communication facilitates a safe, efficient operation. Voice transmission through a respirator can be difficult, annoying, and fatiguing. Movement of the jaw in speaking causes leakage thereby reducing the efficiency of the respirator and decreasing the employee's protection against glycol ethers exposures. Also, skin irritation can result from wearing a respirator in hot, humid conditions. Such irritation can cause considerable distress and disrupt work schedules. To be used effectively, respirators must be individually selected and fitted, conscientiously and properly worn, regularly maintained, and replaced as necessary. In many workplaces, these conditions are difficult, if not impossible, to satisfy. For these reasons and others, OSHA has concluded that reliance on respirators should be minimized.

Paragraph (f)(3) of the proposal would require that engineering controls be inspected and maintained or replaced on a regular schedule to ensure their effectiveness. Regularly-scheduled inspections are required to confirm that engineering controls such as protective shields have not been broken or removed; that ventilation systems are operating properly; that filters are being replaced on a sufficiently frequent interval; and that any other physical, mechanical, or replacement-dependent controls are functioning as intended.

In consideration of glycol ethers' ability to be absorbed through the skin and thereby contribute to overall exposure, paragraph (f)(4) would require the employer to permit employees to leave the work area immediately or as soon as feasible to wash skin areas which have had contact with glycol ethers.

Whenever the TWAs and/or ELs are exceeded or dermal exposure exists, paragraph (f)(5)(i) would require employers to establish and implement a written compliance program to reduce employee exposure to or below the TWAs and/or ELs and eliminate dermal exposure. The plan should provide for this reduction to be accomplished, where feasible, through the use of engineering and work practice controls. If engineering and work practice controls cannot reduce exposures to or below the TWA and EL permissible exposure limits and eliminate dermal exposures then the plan shall include the use of whatever respiratory protection equipment is necessary to achieve compliance and all appropriate personal protective equipment necessary to eliminate contact with glycol ethers. In addition, the Agency believes that the emergency plan prescribed in paragraph (k) is inherently a part of the overall compliance program since it addresses prevention of employee exposure in emergency situations. Therefore, paragraph (f) (5) (i) (B) would require that the the written emergency plan be included in the compliance plan.

The written program requirement commits the employer to evaluating employee exposure and setting down an organized and complete plan of reducing employee exposures to permissible limits. Inclusion of personal protective equipment, including respiratory protection, in the plan assures that the appropriate protective equipment is selected, based on level and mode of exposure, and written into the plan for reference.

Paragraph (f)(5)(ii) would require that the written compliance program be reviewed and updated at least annually, or more often if necessary, to reflect significant changes in the employer's compliance status. By requiring, at a minimum, annual review of the compliance program, the Agency assures that the employer will update the program to reflect the current compliance status of the workplace. This review would require the employer to evaluate all new or altered tasks, procedures, processes, and so forth to determine whether they would result in occupational exposure and, if so, what exposure reduction methods must be implemented.

Paragraph (f)(5)(iii) states that the employer's written compliance program shall be submitted upon request for examination and copying to the Assistant Secretary, the Director, affected employees, and authorized employee representatives. Employee and employee representative access allows workers to gain an awareness of where the permissible exposure limits are exceeded, what steps the employer is taking to reduce or eliminate exposure, and the appropriate respiratory protection and personal protective equipment to use in these areas. Access to the plan by the Assistant Secretary is important for compliance enforcement. Access by the Director is required for that agency to carry out the various investigations and research it deems necessary. For example, performing health hazard evaluations of a plant, determining the current exposure patterns and control methodologies in industry use, and conducting epidemiological studies.

Respiratory Protection: Paragraph (g)

Respirators serve as supplemental protection to reduce employee exposures when engineering and work practice controls are not sufficient to achieve the necessary reduction to or below the TWAs and ELs. The proposed standard, in paragraph (g)(1), states that where respiratory protection is required the employer shall provide, at no cost to the employee, and shall assure the proper use of respirators which comply with the requirements of this section to reduce employee exposures to or below the TWA and EL permissible exposure limits.

In paragraph (g)(1)(i) through (g)(1)(iv), the proposed standard would require that respiratory protection be worn (1) during the interval necessary to install or implement feasible engineering and work practice controls; (2) in work operations, such as maintenance and repair activities and during brief or intermittent operations, for which the employer has established that engineering and work practice controls are not yet feasible; (3) in work situations where the employer has implemented all feasible engineering and work practice controls and such controls are not sufficient to reduce exposure to or below the TWA and/or EL permissible exposure limits; and (4) in emergencies.

In some circumstances (e.g., certain maintenance and repair operations, emergencies, or during periods when engineering and work practice controls are being installed and implemented) OSHA recognizes that respirators may be essential to guarantee worker health and safety. Therefore, provision is made in paragraph (g)(1) for their use as

primary controls in these instances where engineering and work practice controls cannot be used to achieve the TWAs or ELs. In other circumstances where engineering and work practice controls alone cannot reduce exposure levels to the TWAs or ELs, respirators may also be used for supplemental protection. However, it must be kept in mind that the burden of proof of infeasibility rests with the employer in those circumstances where respiratory protection is used in lieu of engineering and work practice controls.

It would be required that all employees who wear respiratory protection be medically screened to determine whether any health conditions exist which could affect the employee's ability to wear a respirator. Considering the health problems which may be exacerbated with respirator use and their associated detrimental effects on an employee, the proposal states in paragraph (g)(2) that no employee shall be assigned tasks requiring the use of respiratory protection if, based upon his or her most recent medical examination, an examining physician determines that the employee will be unable to function normally while wearing a respirator. Common health problems which could present difficulty with respirator use include claustrophobia (an intolerance of feeling enclosed and a subjective feeling of breathing difficulty), chronic rhinitis, nasal allergies (necessitating frequent removal of the respirator to deal with nasal discharges), and chronic sinusitis. In addition, difficulties with use of respirators may arise in employees with respiratory or cardiac diseases. Respiratory diseases include chronic obstructive pulmonary disease, emphysema, asthma, and moderate to severe pneumoconiosis. Cardiac or cardiorespiratory diseases that may affect respirator wear include coronary thrombosis, any type of congestive heart disease, other ischemic heart diseases, and hypertension.

This paragraph would also require that such employees be given the opportunity to transfer to a position where no respirator use is required. That position shall be with the same employer, in the same geographical area, and with the same seniority and rate of pay the employee had just prior to such a transfer, if such a position is available. The Agency believes that this provision will minimize the reluctance of all employees, including those experiencing difficulty with respirator use, to participate in the Medical Surveillance Program for fear of losing his or her job due to the possible inability to wear a respirator.

Paragraph (g)(3) specifies the type of respirators that may be used to provide protection from exposure to glycol ethers. This proposal would permit only supplied-air respirators and would prohibit the use of air-purifying respirators equipped with organic vapor cartridges or canisters. The rationale behind this decision relates, in part, to the odor threshold of the glycol ethers. Generally, an employee using an air purifying respirator can detect a poor facepiece seal or sorbent cartridge breakthrough by the odor of a chemical as it finds its way into the respirator, provided the chemical possesses good warning properties. If the odor threshold of a compound exceeds the permissible exposure limit, however, the employee is deprived of such an inherent odor warning and is not aware of a respirator inadequacy until he/she is overexposed to the compound. Consequently, an important factor in the selection of appropriate respiratory protection is the odor threshold of the chemical of concern.

When considering the odor threshold of a substance, one finds that reported values are widely divergent. Two major factors which influence odor detection are differences between individuals in the ability to perceive a particular odor and the methodology employed in conducting the odor threshold determination. In their "Guide to Industrial Respiratory Protection—Appendix C" (Ex. 5–142), NIOSH states:

> Amoore and Hautala (33) found that on average, 95% of a population will have a personal odor threshold that lies within the range from about one-sixteenth to sixteen times the reported mean "odor threshold" for a substance.

In further explanation, Amoore and Hautala state: (Ex. 5–141)

> The ability of members of the population to detect a given odor is strongly influenced by the innate variability of different persons' olfactory powers, their prior experience with that odor, and by the degree of attention they accord the matter.

This statement addresses not only personal factors which influence odor detection but also raises the issue of differences in testing methodology. Examples of methodology differences include: awareness or lack of awareness of the test subject to the purpose of the test (i.e., to detect an odor) thereby increasing his/her attentiveness to odor detection; presentation mode of the odor samples to the test subject; purity of the test compound; vapor modality (liquid or gaseous); and number of trials. As can be seen, lack of standard testing methodology in conjunction with individual differences in odor perception can lead to the wide variation of odor thresholds found in the literature.

OSHA is aware of two documents that have attempted to account for the variabilities of reported odor thresholds—Amoore and Hautala's "Odor as an Aid to Chemical Safety: Odor Thresholds Compared with Threshold Limit Values and Volatilities for 214 Industrial Chemicals in Air and Water Dilution" (Ex. 5–141) and the American Industrial Hygiene Association's (AIHA) "Odor Thresholds for Chemicals with Established Occupational Health Standards" (Ex. 5–143).

Both documents calculated and utilized the geometric means of the odor thresholds reported in their respective data collections to deal with the broad range of values. In the absence of conducting new, standardized testing, the Agency believes that this is a sound approach to obtaining a single odor threshold value which can be used in evaluating warning properties of compounds.

Amoore and Hautala also present a method for comparing the exposure limit of a substance and its odor threshold through calculation of an "odor safety factor" (i.e., exposure limit divided by odor threshold). The odor safety factor can then be used to classify a compound, using the scale shown in Table A, and thereby determine what percentage of attentive persons can detect the compound at the exposure limit and what percentage of distracted persons will detect a warning of the compound at the exposure limit.

TABLE A

Class	Odor safety factor	Interpretation
A	>550	>90% of distracted persons perceive warning of TLV concentration in air.
B	26–550	50–90% of distracted persons perceive warning of TLV concentration in air.
C	1–26	<50% of distracted persons perceive warning of TLV concentration in air.
D	0.18–1	10–50% of attentive persons can detect TLV concentration in air.
E	<0.18	<10% of attentive persons can detect TLV concentration in air.

Utilizing this methodology and the odor thresholds calculated by Amoore and Hautala, the four glycol ethers

under consideration, at the proposed TWA permissible exposure limits, yield the following classifications:

TABLE B

Compound	Proposed TWA (ppm)	Odor threshold (ppm)	Odor safety factor	Class
2-ME	0.1	2.3	0.04	E
2-MEA	0.1	N/A	N/A	N/A
2-EE	0.5	2.7	0.2	D
2-EEA	0.5	0.056	8.9	C

Both 2-ME and 2-EE have very low odor safety factors with resultant classifications of Class E and Class D, respectively, which means that most employees would not be able to detect breakthrough of these compounds at the proposed TWA permissible exposure limits. The highest classification, Class C, is achieved in the case of 2-EEA, in which less than 50% of distracted persons perceive a warning of 2-EEA at the proposed TWA concentration. The Agency does not find this to be adequate warning capability to permit use of air-purifying respirators.

Table C presents the results obtained when the odor thresholds given in the AIHA document are utilized in the above methodology. One should note that the AIHA lists two odor thresholds for the four glycol ethers: (1) The detection threshold (d) which is the lowest concentration at which a specific percentage of the test subjects, usually 50%, can detect the stimulus as different from odor-free blanks and (2) the recognition threshold (r) which is the lowest concentration at which a specific percentage of the test subjects, usually 50%, can ascribe a definite character to the odor (Ex. 5-143). The AIHA detection threshold values are very similar to the odor threshold values presented in Amoore and Hautala's paper and give the same classification results, therefore, only odor safety factors and classifications associated with recognition threshold values appear in Table C.

TABLE C

Compound	Proposed TWA (ppm)	Odor threshold (ppm)	Odor safety factor	Class
2-ME	0.1	2.4(d)	.....	
		4.4(r)	0.011	E
2-MEA	0.1	0.33(d)	.....	
		0.64(r)	0.17	E
2-EE	0.5	2.7(d)	.....	
		6.5(r)	0.008	E
2-EEA	0.5	0.06(d)	.....	
		0.13(r)	3.8	C

Performing the calculations using the recognition thresholds again results in 2-EE and 2-MEA having very low odor safety factors. The AIHA data also yields a low odor safety factor for 2-MEA (Amoore and Hautala present no odor threshold for this substance). 2-EEA once more achieves the highest odor safety factor and classification, Class C, which, as stated previously, can be interpreted to mean that less than 50% of distracted persons will perceive a warning of the compound at the proposed TWA concentration.

Amoore and Hautala state that their thresholds represent the most favorable conditions for odor testing, that is, the subjects were aware of the test, were attentive, and were trying to detect an odor. The studies utilized by the AIHA for determining the odor thresholds of the four glycol ethers also appear to have utilized test subjects who were aware of their objective and therefore would be concentrating on detecting and/or recognizing an odor. OSHA does not believe that such idealized circumstances for odor detection normally occur in the workplace. An employee would be distracted by performing other tasks (e.g., operating machinery, reviewing charts, observing production processes) and would not normally be focusing his/her attention on detecting a minimal odor level. Even the higher recognition threshold values are likely not to be indicative of odor perception of a distracted employee in the workplace with actual odor recognition occurring at even higher concentrations.

Considering the preceding information, the Agency does not feel that any of the four glycol ethers display adequate warning properties at the proposed TWA permissible exposure limits to permit use of air-purifying respirators. Therefore, only supplied-air respiratory protection is deemed appropriate for use with these compounds.

The use of supplied-air respiratory protection is supported by the following NIOSH comments to the ANPR: (Ex. 7-22)

> In NIOSH CIB #39: The Glycol Ethers, with particular reference to 2-methoxyethanol and 2-ethoxyethanol, NIOSH recommended that exposure to the glycol ethers be reduced to the lowest extent feasible. Only the most protective respirators are consistent with that recommendation: self-contained breathing apparatus with full facepiece operated in the pressure demand mode, or a combination respirator which includes a Type C supplied-air respirator with a full facepiece operated in the pressure-demand mode and an auxiliary self-contained breathing apparatus operated in the pressure-demand mode.

NIOSH goes on to state that if the proposed permissible exposure limits are below the odor threshold and OSHA decides not to follow their recommendation to permit only supplied-air respiratory protection, then

only cartridge or canister respirators with effective end-of-service-life indicators should be allowed. The Agency is not aware of any NIOSH/MSHA approved cartridges or canisters with end-of-service-life indicators for glycol ethers.

Following a conservative approach and allowing only supplied-air respirators eliminates the question of whether employees could be unknowingly exposed as a result of the compound's actual odor threshold being above the permissible exposure limits since the employee is no longer inhaling ambient air through a sorbent cartridge. While the employer must select the appropriate respirator from the table based upon the airborne concentration of glycol ethers, the employer may always select a respirator providing greater protection (i.e., one prescribed for higher concentrations of glycol ethers than are present in the workplace).

The respirator selection table in the proposed standard lists the type of respiratory protection which, at a minimum, must be provided and used at each airborne concentration of glycol ethers in the workplace. In no circumstance shall a respirator be used in atmospheric concentrations which exceed that respirator's assigned protection factor. The respirators selected by the employer must be approved by the Mine Safety and Health Administration (MSHA) and by the National Institute for Occupational Safety and Health (NIOSH) under the provisions of 30 CFR part II or any future revisions. It should be noted that NIOSH is currently in the process of revising the 30 CFR part 11 respirator testing and certification standards. When published, this revision will be listed as 42 CFR part 84. OSHA will expect employers to base respirator selection on the most recent published standards of the aforementioned agencies.

In those situations in which respirator use is required, the employer shall institute a respiratory protection program in accordance with 29 CFR 1910.134 (b), (d), (e), and (f) as would be required by paragraph (g)(4) of this proposed standard. This general industry standard (29 CFR 1910.134) includes provisions for the selection, fit, use, cleaning, and maintenance of respirators. In addition, it contains requirements for a written respiratory protection program and minimum air quality standards for supplied-air respiratory protection systems.

A drawback to respirator use is the skin irritation that can develop with some employees, particularly in hot, humid, and/or dirty environments. The Agency recognizes that this irritation adds to the discomfort and inconvenience already experienced by employees wearing respirators and has included paragraph (g)(5) with the intent of minimizing skin irritation and assuring adequate employee protection. This provision states that employers must permit employees to leave the work area to wash their faces and respirator facepieces as needed to prevent skin irritation from respirator use.

Paragraph (g)(6) deals with the fit testing of respirators. The employer would be required, by paragraph (g)(6)(i), to assure that the respirator issued to the employee exhibits the least possible facepiece leakage and that the respirator is fitted properly and will not permit the employee to inhale glycol ethers in excess of either the TWAs or ELs.

Good face fit is critical in assuring proper performance of respiratory protection. When an employee inhales through a respirator which fits poorly, contaminated workplace air can enter the respirator through gaps and leaks in the seal between the face and the facepiece. Obtaining a proper respirator fit may require the fit testing of a variety of different mask sizes from several manufacturers to select the facepiece with the best fit (least leakage around the faceseal) for each employee. This methodology will reduce inhalation leakage to a minimum.

Quantitative fit testing is a procedure whereby the level of penetration of a test agent of a known concentration is measured inside the facepiece of the respirator. It provides a quantitative assessment of the fit (the fit factor). It allows the employer to continue testing different facepieces until the optimum or best fitting respirator is identified and selected for the employee. Quantitative fit testing requires the use of moderately sophisticated testing equipment and is more expensive to perform than qualitative fit testing, which may reduce its availability in some worksites. Also testing services may not be available in all parts of the country to provide quantitative fit testing services for small employers.

Qualitative fit testing does not provide a numerical measure of the quality of the fit but simply determines whether a respirator fits or not. Qualitative fit testing is a technique whereby a person wearing a respirator is tested to see whether a test agent with a detectable odor or taste threshold can be detected inside the respirator. If the test agent is not detected by the employee wearing the respirator, the respirator is said to fit. Qualitative fit testing is more subjective than quantitative testing because it depends on the individual's ability to detect the test agent.

OSHA believes that while quantitative fit testing may have some advantages, qualitative testing conducted in accordance with the protocols described in Appendix F can adequately accomplish the intent of the standard of ensuring that each employee is assigned and wears the respirator that provides a proper fit with the least possible leakage. Comments are requested on all aspects of fit testing.

Paragraph (g)(6)(ii) states that for each employee wearing a tight-fitting supplied-air respirator, the employer shall perform either a qualitative or quantitative fit test. Fit testing may be accomplished by testing the particular facepiece to be used (make, model, and size), without any air supplying equipment or attachments. Testing is conducted by equipping the facepiece with appropriate air purifying elements. Upon obtaining adequate fit with a particular facepiece, then that facepiece is to be used with the supplied-air system (i.e., air-supplying equipment or attachments). When quantitative fit testing is performed, half mask facepieces must exhibit a fit factor of 100 and full facepieces a fit factor of 500, at a minimum. Regardless of the fit testing protocol utilized, qualitative or quantitative, respirator protection factors are to be assigned according to the respirator selection table in the proposed standard.

Paragraph (g)(6)(iii) would require the employer to perform and certify the results of the appropriate fit tests at the time of an employee's initial fitting, at least annually thereafter, when a different size or make of respirator is used, and when a change in facial structure occurs. This frequency of fit testing is necessary to assure that factors which may affect the proper fit of a respirator are detected and necessary adjustments are performed to assure the integrity of the faceseal. For example, the fit of respirators is not standardized between manufacturers. Fit testing would be required, therefore, whenever a different size or make of respirator is used. In addition, a change in an employee's facial structure can compromise a respirator's faceseal. Examples of such changes include loss of weight, cosmetic surgery, facial scarring, and the installation of dentures. Therefore, fit testing is required at least annually and when any facial changes, such as those mentioned above, occur.

In order to assure that employees willingly participate in fit testing and that such procedures are standardized, paragraph (g)(6)(iv) would require that all tests be performed at a reasonable time and place and at no cost to the employee and must be conducted in accordance with Appendix F of this proposal.

Personal Protective Equipment: Paragraph (h)

The underlying premise of personal protective equipment is that its use will protect against exposure during performance of a task. Paragraph (h) of the proposal contains a number of provisions concerned with the use of personal protective equipment. In this paragraph, employers would be required to select and provide appropriate personal protective equipment in accordance with 29 CFR 1910.132 (General Requirements) and 29 CFR 1910.133 (Eye and Face Protection) of the General Industry Standards as often as necessary throughout the work shift to prevent employee exposure to glycol ethers. Based on good industrial hygiene practice, paragraph (h)(1)(i) of the proposed standard would require that selection of personal protective equipment must be based upon the type of exposure anticipated (e.g., hand contact, splashing, spraying, inhalation), conditions of use (i.e. suitability of the equipment to maintain its protective capabilities under the conditions in which it will be used), and the hazard to be prevented (e.g., splashes to the face, eye irritation, dermal exposure, aerosol inhalation). This approach is performance oriented as it requires that the employer evaluate each process or task which could present a possibility of exposure and then implement the most efficient means for protecting against the exposure.

The employer would also be required by paragraph (h)(1)(ii) of the proposal to provide the appropriate personal protective equipment at no cost to the employee and assure that employees use this equipment. Provision of personal protective equipment at no cost to the employee helps assure employees' acceptance of its use in exposure situations. Since it is the employer's obligation to prevent employee exposure to glycol ethers in the workplace, the responsibility to provide personal protective equipment and assure its use rightfully rests with the employer.

In order to prevent employees from being unwittingly exposed and to achieve adequate protection, paragraph (h)(1)(iii) states that personal protective equipment such as, but not limited to, coveralls, gloves, faceshields, and rubber boots, must be made of materials sufficiently impervious to glycol ethers to prevent employee exposure to these compounds. For example, information submitted in response to the ANPR included breakthrough and permeation studies of various glove materials relative to glycol ethers (Exs. 4–017c, 7–22 attachment 17). Both the study by Union Carbide and that of Dow Chemical indicate that butyl rubber gloves provide good protection against exposure to these compounds. The proposed regulation is performance oriented, however, and does not stipulate that protective gloves or other protective equipment be made of a specific material but simply that any equipment selected be adequate to prevent employee contact with glycol ethers. In this way, the proposed standard will not interfere with any developing technology or innovative techniques that may efficiently protect employees from contact with glycol ethers.

Paragraph (h)(1)(iv) is closely related to the preceding provision in that it would require employers to provide uncontaminated personal protective equipment as often as necessary throughout the work shift to prevent employee exposure to glycol ethers.

Removal and storage of personal protective equipment is covered under paragraph (h)(2) of the proposal. Employers would be required to assure that employees remove all personal protective equipment contaminated with glycol ethers prior to leaving the work area or as soon as feasible if the potential for soak-through/breakthrough exists. This paragraph would also require that removal of contaminated personal protective equipment be done in an area which would minimize exposure of other employees to glycol ethers.

Paragraph (h)(2)(ii) states that the employer must assure that no employee takes home glycol ethers contaminated personal protective equipment. In addition, paragraph (h)(2)(iii) would require the employer to assure that no employee takes glycol ether contaminated equipment out of the workplace unless authorized to do so for the purposes of laundering, cleaning, maintenance, or disposal.

As stated previously, the intent of personal protective equipment is to protect the employee against exposure. Therefore, if a situation arises in which glycol ethers may soak through the equipment provided then the employer must assure that the employee removes the equipment as soon as possible to prevent dermal absorption. In addition, contaminated equipment is to be removed prior to leaving the work area and in an area which would minimize exposure of other employees in order to minimize migration of the contaminant away from the worksite and prevent possible exposure of additional individuals such as fellow employees and family members through airborne or dermal routes. Only authorized employees are to be permitted to take contaminated protective equipment out of the workplace and only for the purposes of laundering, cleaning, maintenance, or disposal. It should be noted that the Agency does not intend for employees to be authorized to launder and clean contaminated items at home or at a public laundromat. Therefore, these activities have been specifically prohibited. Instead, only those employees who are trained and informed as required in paragraphs (h)(3)(ii) and (h)(3)(iii) are to be authorized to remove contaminated personal protective equipment from the workplace.

Contaminated personal protective equipment must be stored in such a manner so as to minimize employee exposure and shall not be worn again until cleaned or laundered. Thus, the area where protective equipment dampened with glycol ethers or glycol ether-containing compounds are stored must be sufficiently apart from areas where employees work or congregate to prevent additional exposure to employees. Rewearing of contaminated equipment is prohibited to prevent additional employee exposure and an enhanced potential for dermal absorption. Storage areas or containers with glycol ethers contaminated personal protective equipment must have either a sign or a label, respectively, as specified in paragraph (m)(1)(ii).

Paragraph (h)(3)(i) would require that each employer must clean, launder, repair, or replace, at no cost to the employee, all required personal protective equipment for each affected employee as necessary to assure its effectiveness and stipulates that the employer is responsible for disposal of these items. The requirement to repair or replace the protective equipment is necessary to insure the proper functioning of these items and, thereby, proper employee protection. Requiring that the employer be responsible for cleaning, laundering, repair, and disposal insures that contaminated equipment will be handled only by personnel who have been trained in the proper work practices for handling this equipment as specified in paragraph (h)(3)(ii) and (h)(3)(iii). Overall, this

paragraph assures that contaminated equipment remains under the control of the employer. This approach permits standardized, consistent cleaning, laundering, repair, and replacement of these items thereby maximizing their effectiveness and helping to assure that they are properly disposed of at the end of their service life.

The employer would also be required by paragraph (h)(3)(ii) to assure that only trained persons remove contaminated personal protective equipment from storage for the purpose of laundering, cleaning, repair or disposal. In this way, only those employees who are aware of the hazards of glycol ethers and use proper handling work practices will contact the equipment. Whether the employer has an on-site laundry/cleaning/repair facility or sends the equipment off-site for laundering, cleaning, or repair, the employer shall inform any person who may have contact with such equipment of glycol ethers' potentially harmful effects and of procedures to safely handle the personal protective equipment as would be required by paragraph (h)(3)(iii).

Paragraph (h)(3)(iv) states that the employer shall assure that laundering, cleaning, maintenance, and disposal are performed only at facilities which are appropriate to handle glycol ethers contaminated personal protective equipment. Therefore, as stated previously, activities such as laundering contaminated personal protective equipment at a public laundromat or in an employee's home would be prohibited. This is to assure that these operations are properly performed and to prevent inadvertent exposure of unknowing individuals.

Paragraph (h)(3)(v) stipulates that when contaminated personal protective equipment is destined for disposal, it shall be placed in a sealed container which is labeled in accordance with paragraph (m)(1)(ii) of this section. This provision will assure that those individuals who may come in contact with the container will be protected against exposure and will be warned of the container's contents.

Hygiene Protection: Paragraph (i)

A characteristic of a number of solvents, including glycol ethers, is that they can be readily absorbed through the skin. Therefore, if employees may become splashed with liquids containing glycol ethers, paragraph (i)(1) would require the employer to provide conveniently located quick drench showers and assure that affected employees use these facilities immediately. Quick drench showers must be able to rapidly drench the employee with a forceful flow of water in order to effectively remove the glycol ether, thereby minimizing dermal absorption. These showers must also be located in the immediate work area of an employee who could be splashed so that they may be reached quickly should an accidental splash occur, once again reducing the length of time glycol ethers remain in contact with the skin and consequently the absorption of these compounds into the body. It is particularly important to locate showers in areas where employees do not normally wear full body protective clothing yet could potentially be accidently splashed or in areas where large volume splashes could occur. Criteria for assessing quick-drench showers and eyewashes can be found in consensus standards such as ANSI Z358.1–1981 and NSA Data Sheet 1–686–80. References such as these can be used to evaluate characteristics such as flowrate, accessibility, construction, testing schedules, and so forth.

Paragraph (i)(2) would require the employer to provide eye-wash fountains within the immediate work area of employees whose eyes could possibly be splashed with liquids containing glycol ethers since these compounds are eye irritants. For the same reasons as above, an employee must be able to reach the fountains quickly so that the flushing can be initiated as soon as possible after an accidental eye splash. In addition, eye-wash fountains should be capable of maintaining an appropriate water pressure for an appropriate length of time to remove glycol ethers from the eyes.

OSHA has not proposed that separate change rooms and shower facilities be provided. In addition, showering at the end of the work shift would not be required. Based upon its understanding of glycol ethers usage patterns, the Agency envisions the use of personal protective equipment as a temporary measure utilized intermittently during performance of an employee's duties and worn over the employee's regular work clothes. It is felt that prohibiting removal of this equipment in common areas will provide adequate protection from exposure for other employees. Due to the dermal absorption properties of glycol ethers, the Agency feels that requiring showering at the end of the work shift would not provide added protection since absorption would have already occurred. Minor splashes can be washed off in normal lavatory facilities while quick-drench showers are available for major exposures. In both cases, other provisions of this standard require employers to assure removal of glycol ethers from the skin immediately or as soon as feasible and replacement of contaminated equipment.

Paragraph (i)(3) would prohibit eating, drinking, smoking, and application of cosmetics in areas of glycol ethers exposure. The purpose of this provision is to prevent inadvertent ingestion, inhalation, or dermal application of glycol ethers. In addition, paragraph (i)(4) would prohibit wearing of personal protective equipment in lunch areas to prevent migration of glycol ethers to an area where other employees may be unknowingly exposed.

Housekeeping: Paragraph (j)

Paragraph (j)(1) would require that all surfaces (e.g. floors, working surfaces, exterior surfaces of equipment) be kept free of glycol ethers to the extent feasible. Not only is this consistent with the intent of General Industry Standards 29 CFR 1910.141(a)(3), Housekeeping, but this provision minimizes both the unnecessary spread of glycol ethers in the workplace and an increased potential for employee exposure.

Paragraph (j)(2) would require employers to conduct a program to detect leaks and spills, including visual inspections of operations involving liquids containing glycol ethers. The intent of this provision is to minimize the number of employees who could be inadvertently exposed through either dermal contact with liquid glycol ethers or elevated airborne concentrations evolving from evaporation of such liquids.

In addition to the above program, paragraph (j)(3) would require preventative maintenance of equipment that handle glycol ethers, including surveys for leaks at intervals appropriate to assure proper functioning of equipment. This provision should assist in reducing exposure resulting from leakage caused by items such as cracked joints, corroded tanks, broken gaskets, worn valve packings, malfunctioning equipment, and so forth.

Periodic inspection and maintenance of process equipment and control equipment such as ventilation systems is an important work practice control. In plants where total containment is used as an engineering control, the failure of process equipment or the ventilation system can seriously increase the probable occurrence of exposures. Frequently, equipment which is near failure or in disrepair will not perform normally. Regular inspections can detect abnormal conditions so that maintenance can then be performed. If equipment is routinely inspected, replaced, or repaired before failure is

likely, the risk of exposure occurring will be reduced.

The Agency has intentionally kept inspection and maintenance requirements in performance-oriented terms rather than dictating specific time intervals for these activities. OSHA is aware that different industry sectors and even different manufacturing processes within the same facility may vary in the frequency of occurrence of leaks/spills or the need for preventative maintenance of equipment. The employer, therefore, is afforded the flexibility to determine the frequency of inspection/maintenance and, as a result, gain any cost savings accrued through elimination of an arbitrarily assigned frequency schedule.

In areas where spillage may occur, paragraph (j)(4) stipulates that the employer must make provisions to contain the spill, to decontaminate the work area, and to dispose of the waste generated by the clean-up. Should a spill occur, having such provisions in place will assist in quickly limiting the area affected by the spill, facilitate its clean-up, and will permit more rapid and efficient decontamination of the spill area and proper disposal of clean-up waste. The intent of this proposed requirement is to increase preparedness for the eventuality of a spill, thereby minimizing employee exposure by reducing the time necessary to control and clean up a spill and properly dispose of waste. Since glycol ethers exist in a variety of work environments, it is left to employers to assess what methods are appropriate to their workplace and conditions of use and are protective of their employees.

Paragraph (j)(5) would require that upon discovery of a leak or spill the employer assure that repair of the leak and/or clean up of the spill is initiated promptly in order to limit the area affected and eliminate the source of leakage. The employees performing this repair and clean up must be adequately protected by suitable personal protective equipment, which may include respiratory protection, to prevent exposure during these operations. These employees must also be trained in proper methods for clean-up and decontamination so that such operations can be accomplished safely, efficiently, and without exacerbating the hazard.

The final provision of the housekeeping section, paragraph (j)(6), would require that waste and debris contaminated with glycol ethers be placed in sealed containers bearing a warning label as specified in paragraph (m)(1)(ii). The containers will minimize airborne concentrations resulting from evaporation of glycol ethers from the wastes and prevent possible accidental employee contact or re-spillage of the material. The warning label is necessary to warn employees who may handle the containers of the hazard they contain. The Agency recognizes that wastes destined for disposal may need to meet packaging and labeling requirements of other local, State or Federal regulatory bodies. It is not OSHA's intent to issue duplicative or conflicting regulations. This provision is directed at protecting and warning employees at the worksite. However, OSHA notes that the containers should leave the worksite for final disposal in a form that meets the requirements of the appropriate regulatory bodies.

Emergencies: Paragraph (k)

This paragraph addresses the handling of emergency situations involving glycol ethers. The proposal requires that for each workplace or work operation where there is a possibility of an emergency involving glycol ethers, the employer must develop a written emergency plan including, at a minimum, those elements prescribed in 29 CFR 1910.38(a). For example, 29 CFR 1910.38(a) includes provisions concerning emergency escape procedures and escape route assignments; procedures to be followed by employees remaining to operate critical plant operations before they evacuate; alarm systems; evacuation plans; employee training; fire protection; and so forth. It should be noted that development of this plan is not dependent upon the existence of employee exposure but is based on the possibility of an emergency situation arising. That is, an employee may be exposed to glycol ethers and yet the potential for an emergency may not exist in the employee's work area. Conversely, there may be no employees in an area where there is a large quantity of glycol ethers, such as a storage tank, but the potential for an emergency exists (e.g., rupture of the tank). An emergency could be a massive release affecting a large area or may be a spill or leak which creates an emergency situation only in the immediate area. Emergency situations, therefore, may not be likely to occur in every workplace. Consequently, the Agency has adopted a performance oriented approach which allows the employer to evaluate and tailor the emergency plan to fit the workplace so long as it meets the requirements of 29 CFR 1910.38(a) and the specific provisions of this section.

In addition to requiring that the emergency plan comply with the requirements of 29 CFR 1910.38(a), paragraph (k)(1) also states the provisions of paragraph (q) of the Hazardous Waste Operations and Emergency Response standard, 29 CFR 1910.120, remain in effect as applicable. Also, an emergency response plan meeting requirements of 29 CFR 1910.120 (q) would be deemed to meet the requirements for an emergency response plan under paragraph (k).

Paragraph (q) of the Hazardous Waste Operations and Emergency Response standard, 29 CFR 1910.120, deals with emergency responses by employees outside the immediate worksite to releases of hazardous substances that occur at locations other than uncontrolled hazardous waste sites and hazardous treatment, storage and disposal operations conducted under the Resource, Conservation and Recovery Act of 1976 as amended (42 U.S.C. 6901 *et. seq.*). The typical site covered by paragraph (q) would include hazardous substance releases at chemical manufacturing facilities. Paragraph (k)(1) makes clear that this paragraph does not override the provisions of 29 CFR 1910.120(q) and that paragraph (q) remains applicable pursuant to its terms. In addition, paragraph (k)(1) specifies that an emergency response plan meeting the requirements of paragraph (q) shall also be deemed to meet the requirements of paragraph (k) for all employees responding to an emergency.

Paragraph (k)(2) would require that all employees be trained in their responsibilities in the event of an emergency to minimize employee exposure, injury, and loss of life while increasing efficiency in dealing with the situation.

Generally, emergencies entail large quantities of free glycol ethers resulting in elevated airborne concentrations, increased chance of dermal contact, and, in some circumstances, the possibility of fire. In view of this, paragraph (k)(3) would require the employer to assure that only designated personnel furnished with appropriate personal protective equipment, including respiratory protection, and trained in reentry procedures are permitted to correct the emergency conditions. The employer would also be responsible for assuring that the appropriate personal protective equipment, housekeeping, and other emergency equipment and supplies for handling the emergency are located in each area where an emergency could occur so that the situation can be dealt with quickly and safely. As stipulated in paragraph (k)(5), all employees, except those designated to correct the situation, must be evacuated from and normal

operations halted in the area where the emergency has occurred until the emergency conditions have been abated. This will minimize the number of employees exposed and eliminate the presence of untrained personnel in the area. In addition, this provision minimizes the potential for exacerbation of the hazard as a result of attempting to maintain operations during an emergency situation.

Paragraph (k)(6) of this section would require the employer to make provisions for immediate evacuation, transportation, and medical assistance at a designated medical facility for affected employees. This provision will help assure that acutely exposed employees will receive appropriate medical attention as quickly as possible after exposure. By having such arrangements made beforehand, confusion or delay in obtaining prompt medical attention for the employee will be minimized.

Medical Surveillance: Paragraph (1)

Paragraph (l)(1)(i) of the proposal requires each employer to institute a medical surveillance program for all employees who are or will be exposed at or above the action level or above the EL. Providing medical surveillance for employees exposed at or above the action level or above the EL is consistent with other health standards that incorporate an action level or an EL and is considered by OSHA to be necessary and appropriate for monitoring the adequacy of the exposure limit to protect individual employees.

The proposal requires that the medical surveillance program provide each covered employee with an opportunity for a medical examination. Paragraph (l)(1)(ii) provides that all examinations and procedures be performed by or under the supervision of a qualified physician and be provided without cost to the employee. Clearly, a qualified physician is the appropriate person to be supervising and evaluating a medical examination. However, certain parts of the required examination do not necessarily require the physician's expertise and may be conducted by another person under the supervision of the physician.

OSHA is proposing to require that persons who administer the pulmonary function tests required by this proposal, must complete a training course in spirometry sponsored by an appropriate governmental, academic, or professional institution. This provision is consistent with other OSHA standards, Benzene (29 CFR 1910.28) and Cotton Dust (29 CFR 1910.1043), and it will assure that employees who must wear respiratory protection will receive adequate assessment of their lung capacity, a vital test in determining if they are capable of wearing a respirator.

This standard provides that all examinations and procedures shall be performed at a reasonable time and place. It is necessary that exams be convenient and be provided during the workday without loss of pay to the employee to assure that they are taken. The employer is required to establish and maintain an accurate record for each employee subject to medical surveillance.

Paragraph (l)(2) would require that the employer provide an initial medical examination to each employee. The purpose of the initial medical examination is to: (1) Establish the current health status of the employee and to determine whether employment in areas with glycol ethers exposure is appropriate; (2) establish essential baseline data against which to measure any change which might be attributable to glycol ethers exposure; and (3) determine whether the individual can safely wear a respirator. OSHA believes that the preplacement examination assessing each worker's state of health prior to the beginning of exposure to glycol ethers is essential to determine whether an employee's health changes over the period of employment and to determine pre-existing conditions that could influence initial job placement.

The medical examination proposed is to include: (1) Medical and work histories with emphasis on the pulmonary and mucous membranes and hematologic system, (2) a reproductive history, (3) a physical examination, (4) a blood analysis including at least a red blood cell count, white cell count, hemoglobin and hematocrit, (5) a pulmonary function test for respirator wearers and (6) any additional tests deemed appropriate by the examining physician.

This information, in conjunction with a complete physical examination, will assist the physician in the determination of the employee's health status, possible past exposures to glycol ethers or other substances that may have damaged organs or systems susceptible to glycol ethers toxicity, and suitability for employment in an area where exposure to glycol ethers will occur. Special emphasis is placed on the portions of the history and physical examination which evaluate organ systems known to be particularly susceptible to glycol ethers toxicity. Emphasis is placed on examination of the skin as evidence indicates that glycol ethers are rapidly absorbed through the skin. Therefore, the skin should be examined for conditions such as dermatitis which might facilitate absorption. Emphasis is also placed on the hematologic system because of the human and animal evidence which has shown adverse effects on various constituents of the blood as a result of glycol ethers exposure. The physical examination should also include attention to the mucous membranes and respiratory systems as these two systems can be nonspecifically irritated by glycol ethers. The pulmonary system takes on added importance with respirator use.

Also included in the initial or preplacement examination are any additional tests deemed appropriate by the examining physician. This provision authorizes the physician to include further tests which could assist the physician in determining the employee's suitability for work in an area in which glycol ethers exposure will occur or in determining whether a worker can safely wear a respirator.

In the proposed medical examination, OSHA has not prescribed any specific tests for the surveillance of adverse reproductive or developmental effects. Information presently available to OSHA is insufficient for the Agency to justify specification of the precise tests to be administered. Few tests are available which can reliably be used to detect the early onset of reproductive/developmental effects. For example, serum hormones such as follicle stimulating hormone (FSH), luteinizing hormone (LH), prolactin, and testosterone, may provide information on alterations in endocrine function which might be early indicators of adverse reproductive functioning. However, due to the cyclical nature of these hormones, multiple and sequential blood samples rather than single time point samples would be required to detect exposure related fluctuations in hormone levels. Furthermore, OSHA is not aware of any data specifically correlating alterations in endocrine function and glycol ethers exposure. Other tests such as sperm count or measurement of testes size are very invasive and the results of these types of tests are highly variable and thus difficult to standardize. For these reasons, employees may be unwilling to submit to testing. Due to the variability, results from individual workers may be difficult to interpret and may not provide meaningful diagnostic information. Because these types of tests are invasive and unlikely to give meaningful information on an individual basis, they have not been included in provisions for a medical

examination. OSHA is seeking comment on the availability of tests which can be used to detect the early onset of adverse reproductive/developmental effects.

OSHA has proposed that the employer provide his/her employees with the opportunity for medical advice or counseling with respect to their ability to produce a healthy child. Glycol ethers have been shown to produce adverse reproductive and developmental effects in several animal species and thus may potentially affect exposed workers' ability to produce healthy children. Therefore, workers who have past or current exposure to glycol ethers and are experiencing difficulties in conceiving a child should be afforded the opportunity for medical advice, counseling, and reproductive testing where it is deemed appropriate by the examining physician. This approach is consistent with other health standards for substances shown to induce adverse reproductive and developmental effects (e.g., Lead, 29 CFR 1910.1025 and Ethylene Oxide, 29 CFR 1910.1047).

OSHA proposes periodic medical examinations to be administered annually. The purposes of the annual examination are: (1) The early detection of biological effects of glycol ethers; (2) the detection of non-occupationally-related diseases that might require reduction of glycol ethers exposure; (3) the assessment of fitness for respirator usage; and (4) the monitoring of general health status and recent illnesses. The requirement that medical examinations be provided annually, as a minimum, is consistent with other OSHA health standards (e.g., Formaldehyde, 1910.1048 and Benzene, 1910.1028). In addition, the adverse effects of overexposure to glycol ethers are subchronic in nature (i.e., the effects may occur within a year). Periodic examinations performed at one-year intervals will allow for the detection of these effects. More frequent reviews of specific biological tests may be performed, if evidence indicates such tests are necessary.

OSHA also proposes a periodic medical re-evaluation of workers required to wear respirators. The re-evaluation is necessary because an illness, a new medication or a change in facial structure may affect and impact on an employee's continuing ability to wear a respirator. The re-evaluation will enable the physician to determine whether the individual can safely continue to wear the same type of respirator, should be re-fitted with another type, or should be removed from any area where respirator use is required.

In addition to routine medical surveillance, the proposal also requires that employers make medical examinations available as soon as possible to all employees who may have been acutely exposed to glycol ethers in an emergency. The emergency surveillance provisions reflect OSHA's concern for those employees who, because of equipment breakdown, container rupture or other causes, may be exposed to higher doses of glycol ethers. Medical evaluations should be made available in the event that such emergencies occur. No specific examination elements have been stipulated in this provision in. order to provide the physician with sufficient flexibility to deal with the nature and degree of exposure sustained.

OSHA has not included a medical examination at the termination of employment. Because of the relatively short biological half-life of glycol ethers (i.e., 24–48 hours) and the subchronic nature of the reproductive/developmental effects associated with glycol ethers, an examination at the termination of employment may not be necessary. However, medical records at termination of employment may be useful to physicians to determine the status of an employee's health and to identify any potential future health effects. Thus, OSHA requests comments on whether provisions for medical examinations at termination of employment should be included in a final standard for glycol ethers.

The employer is required, in paragraph (l)(5), to provide the physician with the following information: A copy of this standard and its appendices; a description of the affected employee's former and current duties as they relate to the employee's glycol ethers exposure level; the employee's former and current exposure level or anticipated exposure level; a description of any personal protective and respiratory equipment used or to be used; and information or medical records from the employee's previous medical examinations that were provided or made available by the employer to the affected employee. Making this information available to the physician will aid in the evaluation of the employee's health in relation to assigned duties and fitness to wear personal protective equipment, when required.

In paragraph (l)(6), the employer is required to obtain a written opinion from the examining physician containing the results of the medical examination as they relate to occupational exposures; the physician's opinion as to whether the employee has any detected medical conditions which would place the employee at increased risk of material health impairment from exposure to glycol ethers; the physician's opinion as to whether the employee is exhibiting any symptoms/signs from overexposure to glycol ethers; any recommended restrictions upon the employee's exposure to glycol ethers or upon the use of protective clothing or equipment such as respirators; and a statement that the employee has been informed by the physician of the results of the medical examination and of any medical conditions which require further evaluation or treatment. This written opinion must not reveal specific findings or diagnoses unrelated to occupational exposures. The employer must provide a copy of the opinion to the affected employee.

The purpose in requiring the employer to obtain a written opinion from the examining physician is to provide the employer with a medical basis to aid in the determination of initial placement of employees and to assess the employee's ability to use protective clothing and equipment. The physician's opinion will also provide information to the employer as to whether the employee may be suffering from overexposure to glycol ethers. The employer can then reassess the employee's exposure and work practices and take steps to reduce that employee's exposure. The requirement that a physician's opinion be in written form will ensure that employers have had the benefit of this information. The employer shall provide a copy of the physician's written opinion to the affected employee within 15 days of its receipt. The requirement that an employee be provided with a copy of the physician's written opinion will ensure that the employee is informed of the results of the medical examination. The requirement that the physician sign the opinion is to ensure that the information that is given to the employer has been seen and read by the physician.

The purpose in requiring that specific findings or diagnoses unrelated to occupational exposures not be included in the written opinion is to encourage employees to participate in the medical surveillance program by removing any concern that the employer will obtain adverse information about the employee's physical condition that is unrelated to occupational exposures.

In the proposed standard, in Appendix D, OSHA has included a non mandatory, reproductive history questionnaire. The questionnaire which was excerpted and modified comes fron

the Office of Technology Assessment's (OTA) report, Reproductive Health Hazards in the Workplace (Ex. 5–135, pp. 382–388) and is included in the standard to give guidance on conducting reproductive histories for workers exposed to glycol ethers. As stated in the OTA report, this questionnaire is a composite derived from several research facilities, it is not a validated questionnaire. Nevertheless it has value in providing guidance and information on pertinent factors which may be important in understanding a worker's medical background.

Communication of Glycol Ethers Hazards to Employees: Paragraph (m)

Paragraph (m) of this proposal entitled: "Communication of Glycol Ethers Hazards to Employees" addresses the issue of transmitting information to employees about the hazards of ethylene glycol ethers through the use of: (1) Signs and labels, (2) material safety data sheets, and (3) information and training. While previous OSHA health standards generally included separate paragraphs on employee information and training and signs and labels, both of these areas have been incorporated into this single paragraph, along with material safety data sheet provisions, to provide consistency with the Hazard Communication Standard (HCS) which addresses these areas.

The Hazard Communication Standard (HCS), 29 CFR 1910.1200, requires all chemical manufacturers and importers to assess the hazards of the chemicals they produce or import, and all employers to provide information concerning the hazards of such chemicals to their employees. The transmittal of hazard information to employees is to be accomplished by means of comprehensive hazard communication programs, which are to include container labeling and other forms of warning, material safety data sheets and employee training. The HCS also addresses the responsibility of producers of chemicals to provide information to downstream employers.

In paragraph (m) of this proposal, it is the intent of the Agency to avoid repetition of those requirements comprehensively laid out in § 1910.1200, while specifying additional requirements that are directed at protecting employees against the particular hazards associated with exposure to glycol ethers.

The proposed standard, paragraph (m)(1)(i), would require that all entry and accessways to regulated areas be posted with appropriate warning signs which bear, at a minimum, the legend: "Danger, Glycol Ethers [specific chemical name(s)], Blood and Reproductive Hazard, Eye and Respiratory System Irritant, Avoid Inhalation and Skin/Eye Contact, Authorized Personnel Only, Respiratory Protection Required". In addition, these signs should include any other appropriate warnings such as "Flammable—No Smoking, Sparks, or Open Flames" whenever such hazards may exist. It is intended that these signs will serve to warn employees, who may otherwise not know, that they are entering a regulated area. These warning signs are required to be posted whenever a regulated area exists, that is, whenever airborne concentrations exceed or can reasonably be expected to exceed the permissible exposure limits.

It could be possible that at some work sites or operations the airborne concentrations of glycol ethers cannot be reduced below the permissible exposure limits through the use of engineering controls. In such instances, a regulated area may exist for an extended period of time. Signs would be needed in these circumstances to warn employees that entry is permitted only if the employee is authorized, is wearing respiratory protection, and there is a specific need to enter the area.

Regulated areas may also exist on a temporary basis, as would occur during maintenance and/or emergency situations. In these types of situations, the use of warning signs is also important since a maintenance or emergency situation is by nature a new or unexpected source of exposure to employees who are regularly scheduled to work at these sites. It is expected and required by other provisions of this standard that employees will also be provided with any other personal protective equipment and training that is necessary to assure their health and safety while in these areas.

These signs will also supplement the training which employees are to receive under the other provisions of this paragraph, since even trained employees need to be reminded of the locations of regulated areas (or made aware of new ones) and of the precautions necessary to be taken before entering these areas.

The wording of the warning signs for regulated areas has been specified in the proposal in order to ensure that an adequate warning is given to employees. OSHA believes that the use of the word "Danger" is appropriate, based on the evidence of the toxicity of glycol ethers. "Danger" is used to attract the attention of workers, to alert them to the fact that they are in an area where the permissible exposure limits are exceeded, and to emphasize the importance of the message that follows. The use of the word "Danger" is consistent with other recent OSHA health standards such as Formaldehyde (29 CFR 1910.1048). Inclusion of the statements "Blood and Reproductive Hazard" and "Eye and Respiratory System Irritant" is consistent with the effects that have been demonstrated to be associated with these substances (see section V, Health Effects, of this document). The signs are also required to bear the legend, "Respiratory Protection Required". While OSHA recognizes that some employees entering the regulated areas may not be exposed above either the 8-hour TWAs of 0.5 ppm (2–EE, 2–EEA) and 0.1 ppm (2–ME, 2–MEA) or the Els of 2.5 ppm (2–EE, 2–EEA) and 0.5 ppm (2–ME, 2–MEA) as averaged over a 15-minute period, it is still possible that some employees who are assigned to work in these areas without the use of respiratory protection may remain in these locations for long enough periods of time so that they would be needlessly overexposed to glycol ethers. To ensure that these employees are adequately protected, it is necessary to post the sign in order to alert them to the need to wear respirators. The employer should note that in addition to respiratory protection, paragraph (e)(4) requires that all persons entering a regulated area be provided with and required to use appropriate personal protective equipment while paragraph (m)(4) would require training of these persons.

Inclusion of the phrase "Authorized Personnel Only" on these signs serves to notify employees that only those persons specifically authorized by the employer are permitted in the regulated area.

Paragraph (m)(2) would require that warning labels or other appropriate forms of warning complying with the requirements of 29 CFR 1910.1200(f) of the General Industry Standards be affixed to all shipping and storage containers containing glycol ethers or glycol ethers-contaminated materials. These labels must state: "Caution, Contains Glycol Ethers [specific chemical name(s)], Blood and Reproductive Hazard, Eye and Respiratory System Irritant, Avoid Inhalation and Skin/Eye Contact". In addition, the label shall include any other hazard warnings (e.g., "Flammable—Keep away from heat, sparks, and flame") which are appropriate to the contents of the container along with any other information required by the Hazard Communication Standard, 29 CFR 1910.1200. It is proposed that required labels would remain affixed not only to

containers being used at the work site/operation but also those leaving the workplace. The purpose of this requirement is to assure that downstream employers and employees are informed of the presence of glycol ethers, their associated hazards, and that special practices may need to be implemented to insure against exposure. An employer's obligation, under section 6(b)(7) of the Act, to inform employees of hazardous conditions is not limited to the employer's own employees. When an employer manufactures, formulates, or sells a product, it may unavoidably expose the employees of downstream employers to the hazards of glycol ethers. This is especially important when the manufacturer, formulator, or seller is the only employer able, through his knowledge of the product, to provide the information necessary to protect employees. Furthermore, hazard labels alert other employers who, in the absence of such labels, might not know that glycol ethers are present in their workplace and that they have incurred the obligation of complying with the standard.

In addition to being consistent with the requirements of the HCS, these requirements are consistent with the mandate of section 6(b)(7) of the Act, which requires OSHA health standards to prescribe the use of labels or other appropriate forms of warning to apprise employees of the hazards to which they are exposed.

OSHA also proposes in paragraph (m)(3) of this standard to require the employer to obtain or develop and to distribute and provide access to material safety data sheets for ethylene glycol ethers in accordance with the requirements of 29 CFR 1910.1200(g). OSHA feels that a properly completed material safety data sheet (MSDS), if readily available to employees, can serve as an excellent, concise source of information regarding the hazards associated with glycol ethers. OSHA's primary intent in this section of the proposed standard, as stated in the Hazard Communication Standard (HCS), is to ensure that employees will receive as much information as is needed concerning the hazards posed by chemicals in their workplaces. The material safety data sheet ensures that this information will be available to them in a usable, readily accessible and concise form. The material safety data sheet also serves as the central source of information to employees and downstream employers who must be provided with an MSDS if glycol ethers or a product containing glycol ethers is produced and shipped out of the plant. In addition, the MSDS serves as the basic source of information on the hazards of ethylene glycol ethers essential to the training provisions of this and other applicable health standards.

Producers and importers have the primary responsibility, under the HCS to develop, update, and distribute the material safety data sheet. The manufacturer or importer is most likely to have the best access to information about the product, and is therefore responsible for disseminating this information to downstream users of the material. The requirements for the information that is to be contained on the material safety data sheet are explained in detail at 29 CFR 1910.1200(g).

All employers with employees potentially exposed to glycol ethers must maintain material safety data sheets and provide their employees with access to them in accordance with 29 CFR 1910.1200(g). For employers whose employees' exposure to glycol ethers is from products received from outside sources, the information necessary for a complete MSDS or the MSDS itself is to be obtained from the manufacturer and made available to affected employees.

Paragraphs (m)(4)(i) through (m)(4)(iii) of this proposed standard would require employers who have a workplace or work operation covered by this section to provide information and training to all employees who are potentially exposed to these chemicals. The training program is to be in accordance with the requirements of the HCS paragraph (h), including specific information required to be provided by that section and those items stipulated in paragraph (m)(4)(iv) of this standard. In addition, paragraph (m)(4)(ii) would require the employer to institute a training program for all employees who are potentially exposed to glycol ethers, to assure each employee's participation in the program and maintain a record of this participation, and to maintain a record of the contents of such programs. This will assist the employer in determining which employees have received training, the information provided to the employees, and those employees who are still in need of such training. Training is to be provided, at no cost to the employee, prior to or at the time of initial assignment to a job involving potential exposure to glycol ethers, at least annually thereafter, and whenever a new hazard from glycol ethers is introduced into their work area. Examples of a new glycol ethers hazard would include, but are not limited to, use of glycol ethers or glycol ethers-containing mixtures where none were previously utilized and installation of a process which could result in employee exposure to glycol ethers or increase existing exposure levels. These types of situations would warrant additional training to ensure that employees remain apprised of any new or increased glycol ethers exposure hazards and the precautions necessary to protect themselves from exposure.

Paragraph (m)(4)(iv) would require that the training program be conducted in a manner that the employee is able to understand and shall include at least the following: (A) The health hazards associated with glycol ether exposure with special attention to the information in Appendix A of this section; (B) the quantity, location, manner of use, release, and storage of glycol ethers at the worksite and the specific nature of operations that could result in exposure to glycol ethers, especially above the TWAs or ELs; (C) an explanation of the importance of engineering and work practice controls for employee protection and necessary instruction in the use of these controls; (D) the measures employees can take to protect themselves from exposure to glycol ethers, such as diligent personal hygiene, proper use of protective equipment, and specific procedures the employer has implemented to protect employees against exposure, including appropriate work practices, emergency procedures, and personal protective equipment; (E) the details of the hazard communication program developed by the employer, including an explanation of the signs, labeling system, and material safety data sheets and how employees can obtain and use the appropriate hazard information; (F) the purpose, proper selection, fitting, proper use, and limitations of respiratory protection and personal protective clothing and eye protection; (G) the purpose and a description of the medical surveillance program required under paragraph (1) of this proposed section including the right of any employee exposed to glycol ethers at or above the AL or above the EL to obtain (1) medical examinations as required by paragraph (1) of this section at no cost to the employee, (2) the employee's medical records required to be maintained by paragraph (n)(2) of this section, and (3) all air monitoring results representing the employee's exposure to glycol ethers and required to be kept by paragraph (n)(1) of this section; (H) a copy of the final glycol ethers standard and its appendices and a discussion of its contents with an explanation of the contents of the MSDSs for glycol ethers; (I) instructions for the handling of spills and clean-up

procedures; and (J) a review of emergency procedures including specific duties or assignments of each employee in the event of an emergency.

Paragraph (m)(4)(iv)(A) is of primary importance in communicating hazards and training employees. Until employees understand the health hazards of a compound to which they are potentially exposed, the work practices, engineering controls, use of personal protective equipment, and any other precautions which should be taken have little meaning. The Agency feels, therefore, that effectively communicating a compound's health hazards to employees is the initial step in their understanding of other steps necessary to protect them against exposure. OSHA feels strongly that it is important for each worker to be able to recognize how and where he or she might be occupationally exposed to glycol ethers and what steps should be taken to limit exposure. Therefore, the Agency has required, in paragraphs (m)(4)(iv) (B), (C), (D), (E), (F), and (I), that workers be provided information and trained in practices pertinent to location, use, and so forth of glycol ethers in the workplace; work practices and engineering controls; spills and clean-up; self protective measures; the employer's hazard communication program; and personal protective equipment as they apply to glycol ethers and reduction of exposure. Providing a description of the medical surveillance program and its purpose, as stipulated in paragraph (m)(4)(iv)(G), will allow employees to understand what medical follow-up has been initiated and is available to evaluate occupational exposure. This section would also require that employees be informed that the medical examinations required under paragraph (1) are to be provided at no cost to the employee. The Agency anticipates that this fact, along with an understanding of the medical surveillance program, will encourage employees to participate. In addition, employees must be informed of their right to access of their personal medical records and all air monitoring results representing their exposure to glycol ethers since these records are concerned directly with the employee's health as it relates to exposure to glycol ethers. The purpose of paragraph (m)(4)(iv)(H) is to assure that employees are aware of the existence of the standard and material safety data sheet(s) and are familiarized with the information contained in these documents. In order to assist in successfully achieving the goals outlined in the emergency plan, paragraph (m)(4)(iv)(J) states that employees must be trained in emergency procedures including their specific responsibilities should an emergency occur.

Finally, this section would require that employees be informed that the medical examinations required under paragraph (1) are to be provided at no cost to the employee. The Agency anticipates that this fact, along with an understanding of the medical surveillance program, will encourage employees to participate. In addition, employees must be informed of their right to access of their personal medical records and all air monitoring results representing their exposure to glycol ethers since these records are concerned directly with the employee's health as it relates to exposure to glycol ethers.

OSHA has determined during other rulemakings that an information and training program, as incorporated in this proposed standard in an overall "Communication of Hazards to Employees" paragraph, is essential to inform employees of the hazards to which they are exposed and to provide employees with the necessary understanding of the degree to which they themselves can minimize the health hazard potential. Training is essential to an effective overall hazard communication program and serves to explain and reinforce the information presented to employees on signs, labels, and material safety data sheets. These written forms of information and warning will be relevant and meaningful only when employees understand the information presented and are aware of the actions to be taken to avoid or minimize exposures. Active employee participation in training sessions can result in the effective communication of hazard information to employees which can further result in workers taking conscientious protective actions at their job duties, thereby decreasing the possibility of occupationally-induced illnesses and injuries.

OSHA proposes the training provisions of this standard to be in performance-oriented, rather than specified and detailed language. The proposed standard, in requiring training to be in accordance with the requirements of 29 CFR 1910.1200, lists the categories of information to be transmitted to employees and not the specific ways that this is to be accomplished. The Agency believes that the employer is in the best position to determine how the training he or she is providing is being received and absorbed by the employees. OSHA has therefore laid out the objectives to be met and the intent of its training to ensure employees are made aware of the hazards in their workplace and how they can help to protect themselves. The specifics of how this is to be accomplished are left up to the employer. The Agency anticipates that the use of such performance-oriented requirements will encourage employers to tailor their training needs to their specific workplaces, consequently resulting in the most effective training program suitable for each specific workplace.

Recordkeeping: Paragraph (n)

Section 8(c) of the Occupational Safety and Health Act obligates employers to keep and make available such records as the Secretary may prescribe as necessary or appropriate for the enforcement of the Act, or for developing information regarding occupational injuries and illnesses. Accordingly, paragraph (n) of this proposal requires employers to keep several types of records to achieve the intent of this section of the Act. These include records of (1) exposure measurements and all objective data relied on as a basis for exemption from the monitoring requirements, (2) medical surveillance, and (3) training.

Paragraph (n)(1) of the proposal mandates that the employer establish and maintain exposure records consistent with 29 CFR 1910.20, to accurately reflect the extent and duration of employee exposure to glycol ethers. Specifically, records must include the following information: (a) The name, social security number, and job classification of the employee(s) monitored and of all other employees whose exposure the monitoring is intended to represent; (b) the dates of monitoring, sample identification number, sampling duration, time of day, and exposure monitoring results of each of the samples taken including a description of the procedure used to determine representative employee exposures; (c) the operation(s) covered by the monitoring; (d) the sampling and analytical methods used and evidence of their accuracy; (e) the type of respiratory protective devices, if any, worn by the employee; and (f) any other conditions that might have affected the employee monitoring results. Unusual conditions which may affect monitoring results generally stem from, but are not limited to, situations which could cause an abnormal increase/decrease in the airborne concentration of glycol ethers. Examples of such situations are a temporary increase/decrease in production; failure of an engineering control to operate properly; release of glycol ethers in the employee's vicinity

as may occur during an emergency or maintenance operation; seasonal variations caused by increased/decreased air movement resulting from opening or closing of doors and windows or use of fans; or a change in an employee's mobility or proximity to a source of glycol ethers. The proposal would require that employee exposure measurement records be maintained for each measurement taken. The record may represent several employee exposure measurements if representative sampling, as described in paragraph (d), is conducted. The exposure monitoring results that would be required under paragraph (n)(1)(ii)(B) above must be expressed, at a minimum, as either an 8-hour time weighted average (TWA) or a 15-minute excursion limit (EL), whichever is applicable. OSHA believes that this is necessary to allow employees, their designated representatives, and others accessing these records to be able to determine employee exposure levels without performing numerous and sometimes unfamiliar calculations.

This proposal has included a provision for the use of objective data in place of initial monitoring to minimize the costs of initial monitoring in circumstances where the employer can demonstrate that insignificant amounts of glycol ethers are present in the workplace and the potential for exposure to glycol ethers above the ALs or ELs does not exist. OSHA feels that requiring an employer to document objective data determinations and retain them, as stipulated in paragraph (n)(1)(iii), should discourage abuse of this provision since employees and their representatives are permitted access to this information. Access would enable employees and their representatives to ensure that the exemption determination is a reasonable one, thereby encouraging use of objective determinations only in cases where the data warrant such use. Maintaining a record of the data employed for objective determinations will also permit OSHA to ascertain whether compliance with the standard has been achieved.

For the purpose of acquiring the capability of correlating employee exposure level data with an individual's medical surveillance results, OSHA is proposing in paragraph (n)(1)(iv) that exposure monitoring records be maintained for at least duration of employment plus 30 years.

In addition to records on employee exposure measurements, paragraph (n)(2)(i) would require the employer to establish and maintain an accurate individual record for each employee subject to medical surveillance as stipulated by paragraph (1) of the proposed standard, in accordance with 29 CFR 1910.20. OSHA believes that medical records, like exposure monitoring records, are necessary and appropriate both to the enforcement of the standard, and to the development of information regarding the causes and prevention of occupational illnesses. Furthermore, medical records are necessary for the proper evaluation of the employee's health.

Paragraph (n)(2)(ii) would require that this record include at least the following: (1) The name and social security number of the employee; (2) the physician's written opinion on the initial, periodic, and additional examinations; (3) any employee medical complaints related to exposure to ethylene glycol ethers; (4) a copy of the information provided by the employer to the physician as required by paragraph (l)(6) of this section; and (5) a copy of the medical and reproductive histories, medical questionnaire responses, and results of any medical tests required by the standard or mandated by the examining physician.

Paragraph (n)(2)(iii) would require the employer to retain these medical records for at least the duration of employment plus 30 years. The extended record retention period is needed because diagnosis of disease in employees is assisted by, and in some cases can only be made by, having present and past exposure data as well as the results of present and past medical examinations. In revising 29 CFR 1910.20 "Access to Employee Exposure and Medical Records" OSHA initially proposed to reduce the retention period for medical records. However, in the final rule the Agency states:

> "Based on the evidence submitted, OSHA has determined that the proposed reduction in the retention period for medical records is not justified. The long-term retention of records is necessary to provide a data base for the detection of occupational diseases that may not manifest themselves for many years after onset of exposure." (53 FR 38154 September 29, 1988)

The Agency therefore believes that maintenance of records for duration of employment plus thirty years is prudent and warranted for developing information regarding the causes and prevention of occupationally-induced illness.

With regard to training records, paragraph (n)(3) would require the employer to retain all employee training records for 1 year beyond the last date of employment for that employee.

Paragraph (n)(4)(i) mandates that the employer assure that all records required to be maintained by this section are made available upon request to the Assistant Secretary and the Director for examination and copying. In addition to being given records access specifically by this section, the Assistant Secretary and the Director are empowered to examine and copy records by Section 8(c)(1) of the OSH Act. This portion of the Act states that each employer shall make, keep and preserve, and make available to the Secretary or the Secretary of Health, Education, and Welfare [now Health and Human Services (HHS)], such records regarding his activities relating to this Act as the Secretary, in cooperation with the Secretary of Health, Education and Welfare [HHS], may prescribe by regulation as necessary or appropriate for the enforcement of this Act or for developing information regarding the causes and prevention of occupational accidents and illness.

While the Assistant Secretary is empowered to examine and copy records, access to personally identifiable records is subject to Agency rules of practice and procedure which have been published at 29 CFR 1913.10 (45 FR 35384).

Paragraph (n)(4)(ii) would require the employer to provide upon request for examination and copying, all employee exposure monitoring records required to be maintained by paragraph (n)(1) of this section to affected employees, former employees, and designated representatives in accordance with 29 CFR 1910.20 (a) through (e) and (g) through (i). In addition, paragraph (n)(4)(iii) would require employers to provide upon request for examination and copying, all employee medical records required to be maintained by paragraph (n)(2) of this section to the subject employee and to anyone having the specific written consent of the subject employee in accordance with 29 CFR 1910.20.

Section 8(c) of the Act explicitly provides employees and their representatives with the right to have access to monitoring records. Several other provisions of the Act contemplate that employees and their representatives are entitled to have an active role in the enforcement of the Act . Employees and their representatives need the pertinent information concerning exposures to toxic substances and the consequences to the health and safety of the employees if they are to benefit properly from these statutorily-created rights.

In 29 CFR 1910.20, are spelled out the procedures for access to records by

OSHA, employees, and employees' designated representatives. This General Industry Standard was promulgated as the generic rule for access to employee exposure and medical records. It is discussed here to make the employer aware that it applies not only to records created pursuant to specific standards but also to records which are voluntarily created by employers. A more detailed discussion of the rationale and provisions for 29 CFR 1910.20 can be found at 45 FR 35312 (May 23, 1980).

The transfer of employee exposure monitoring and medical records is to be in accordance with the provisions of paragraph (h) of 29 CFR 1910.20. If an employer ceases to do business and there is no successor employer to receive and retain the records for the prescribed period, the employer is to notify the Director at least 90 days prior to disposal and transmit the records to the Director for retention, if requested by the Director within that period.

Requirements for recordkeeping under the Paperwork Reduction Act are discussed under Section XI—Clearance of Information Collection Requirements.

Dates: Paragraph (o)

It is proposed that the final standard become effective 60 days after its publication in the **Federal Register** (the Effective Date). This will permit time for public distribution of the standard and provides a sufficient period for employers to familiarize themselves with the regulatory provisions. All obligations under the final standard will commence on the Effective Date except those discussed in the following paragraphs, which will be phased-in during the indicated periods of time.

The initial exposure monitoring required by paragraph (d) and the training required by paragraph (m)(4) of this section are proposed to be completed as soon as possible but not later than 90 days after the effective date of the final standard. The Agency believes that this is adequate time to conduct monitoring and train employees, even in those workplaces which operate on a multi-shift work schedule.

Upon receipt and evaluation of the monitoring results, regulated areas can be established; respiratory protection can be selected and provided; and medical surveillance can be implemented. Therefore, those requirements found in paragraphs (e), (g), and (l) respectively, are to be complied with as soon as possible but not later than 120 days after the effective date of the final standard.

Since development of the emergency plan necessitates, among other things, purchase of and distribution/placement of appropriate equipment and supplies, evaluation of potential emergency sites in the facility and appropriate evacuation routes, and additional training of employees, it is proposed that the emergency plan required by paragraph (k) be completed as soon as possible but not later than 180 days after the effective date.

Development of the written compliance plan stipulated in paragraph (f)(6) of this section requires that the employer determine effective and appropriate engineering controls and work practices to reduce employee exposure levels. Since the provisions in this paragraph may require an in-depth analysis of the workplace and could necessitate obtaining outside expertise, a longer period of time has been allotted for compliance. However, the written compliance plan is to be completed no later than 1 year after the effective date.

In addition, the installation of emergency showers and eyewashes required in paragraph (i) may also demand extra time for the completion of necessary plumbing and construction. Therefore, the Agency is proposing that eyewashes and showers be installed and usable as soon as possible but in any event not later than 1 year after the effective date.

The Agency believes that the implementation of engineering controls will be the most time-consuming aspect of the final standard. While the initial evaluation and planning of these controls will have been completed as a result of the development of the compliance plan, OSHA realizes that additional time could be required for ordering and installing the necessary equipment. Therefore, engineering controls are to be implemented as soon as possible but no later than 2 years after the effective date.

Overall, work practices are to be implemented as soon as possible. Those work practices directly related to engineering controls being installed in accordance with the compliance plan are to be implemented as soon as possible after these engineering controls are functional. OSHA solicits comments on the appropriateness of these proposed start-up dates.

Appendices: Paragraph (p)

The proposed standard contains 5 appendices which are designed to assist employers and employees in implementing the provisions of this standard. Appendices A, B, C, D and E are nonmandatory and are included primarily to provide information and guidance. In addition these appendices are not intended to detract from any obligation that the proposed standard imposes.

In particular appendix D, is a sample Reproductive History Questionnaire. This questionnaire was derived from appendix B of the Office of Technology and Assessment's (OTA) report Reproductive Hazards in the Workplace (Ex. 5–135). As noted by the OTA, elements of the questionnaire were derived from various research facilities to develop a composite questionnaire. They also note that it is not a validated questionnaire. Nevertheless, OSHA believes that this sample questionnaire provides useful information which may provide guidance and information on pertinent factors in conducting a reproductive history. OSHA seeks comment on the usefulness of this questionnaire. OSHA also welcomes other information on other reproductive history questionnaires which may be more useful or appropriate.

The appendices which are included in the standard are: Appendix A—Substance Safety Data Sheet for Glycol Ethers; Appendix B—Substance Technical Guidelines for Glycol Ethers; Appendix C—Medical Surveillance Guidelines for Glycol Ethers; Appendix D—Reproductive History Questionnaire; Appendix E—Sampling and Analytical Method for Glycol Ethers; and Appendix F—Qualitative and Quantitative Fit Test Procedures.

XI. Clearance of Information Collection Requirements

On March 31, 1983, the Office of Management and Budget (OMB) published a new 5 CFR Part 1320, implementing the information collection provisions of the Paperwork Reduction Act of 1980, 44 U.S.C. 3501 *et seq.* (48 FR 13666). Part 1320, which became effective on April 30, 1983, sets forth procedures for agencies to follow in obtaining OMB clearance for collection of information requirements contained in proposed rules to OMB not later than the date of publication of the proposal in the **Federal Register**. It also requires agencies to include a statement in the notice of proposed rulemaking, indicating that such information requirements have been submitted to OMB for review under section 3504(h) of the Paperwork Reduction Act.

In accordance with the Paperwork Reduction Act of 1980 (44 U.S.C. 3501 *et seq.*), and the regulation issued pursuant thereto (5 CFR part 1320), OSHA certifies that it has submitted the information collection requirements contained in this proposed standard to the Office of Management and Budget (OMB) for review under section 3504(h) of the Act. Paragraph (n) is the provision

that makes the major contribution to the information collection requirements in the proposed standard. Comments on these information collection requirements may be submitted by interested parties to the Office of Information and Regulatory Affairs of OMB, Attention: Desk Officer for the Occupational Safety and Health Administration, New Executive Office Building, Washington, DC 20503. OSHA requests that copies of such comments also be submitted to the OSHA rulemaking docket, at the following address: Docket Officer, Docket No. H-044, room N2625, U.S. Department of Labor, 200 Constitution Avenue, NW., Washington, DC 20210.

Public Reporting Burden

Public reporting burden for this collection of information is estimated to be approximately 24 hours initially and approximately 24 recurring hours with an average .08 hours per response. Send comments regarding this burden estimate or any other aspect of this collection of information, including suggestions for reducing this burden, to the OSHA rulemaking docket, at the address previously set forth; and to the Office of Information and Regulatory Affairs of OMB.

XII. Public Participation—Notice of Hearing

Interested persons are invited to submit written data, views, and arguments with respect to this proposed standard. These comments must be postmarked on or before June 7, 1993, and submitted in quadruplicate to the Docket Officer, Docket No. H-044, room N2625, U.S. Department of Labor, 200 Constitution Avenue NW., Washington, DC 20210. Comments limited to 10 pages or less also may be transmitted by facsimile to (202) 219-5046, provided the original and three copies are sent to the Docket Officer thereafter.

Written submissions must clearly identify the provisions of the proposal which are being addressed and the position taken with respect to each issue. The data, views, and arguments that are submitted will be available for public inspection and copying at the above address. All timely written submissions will be made a part of the record of the proceeding.

Pursuant to section 6(b)(3) of the Act, an opportunity to submit oral testimony concerning the issues raised by the proposed standard will be provided at an informal public hearing scheduled to begin at 10 a.m. on July 20, 1993, in Washington, DC in the auditorium of the Frances Perkins Building, U.S. Department of Labor, 200 Constitution Avenue, NW., Washington, DC 20210.

Notice of Intention to Appear

All persons desiring to participate at the hearings must file in quadruplicate a Notice of Intention to Appear, postmarked on or before June 7, 1993, addressed to Mr. Tom Hall, OSHA Division of Consumer Affairs, Docket No. H-044, room N-3649, U.S. Department of Labor, 200 Constitution Avenue NW., Washington, DC 20210; telephone (202) 219-8615. The Notice of Intention to Appear also may be transmitted by facsimile to (202) 219-5046, provided the original and 3 copies of the Notice are sent to the above address thereafter.

The Notices of Intention to Appear, which will be available for inspection and copying at the OSHA Docket Office (Room N-2625), telephone (202) 219-7894, must contain the following information:

(1) The name, address, and telephone number of each person to appear;

(2) The capacity in which the person will appear;

(3) The approximate amount of time requested for the presentation;

(4) The specific issues that will be addressed;

(5) A detailed statement of the position that will be taken with respect to each issue addressed; and

(6) Whether the party intends to submit documentary evidence, and if so, a brief summary of that evidence.

Filing of Testimony and Evidence Before Hearings

Any party requesting more than 10 minutes for a presentation at the hearing, or who will submit documentary evidence, must provide in quadruplicate the complete text of the testimony, including any documentary evidence to be presented at the hearing to the OSHA Division of Consumer Affairs. This material must be postmarked by June 28, 1993, and will be available for inspection and copying at the OSHA Docket Office. Each such submission will be reviewed in light of the amount of time requested in the Notice of Intention to Appear. In those instances where the information contained in the submission does not justify the amount of time requested, a more appropriate amount of time will be allocated and the participant will be notified of that fact.

Any party who has not substantially complied with this requirement may be limited to a 10-minute presentation. Any party who has not filed a Notice of Intention to Appear may be allowed to testify, as time permits, at the discretion of the Administrative Law Judge.

OSHA emphasizes that the hearing is open to the public, and that interested persons are welcome to attend. However, only persons who have filed proper notices of intention to appear will be entitled to ask questions and otherwise participate fully in the proceeding.

Conduct and Nature of Hearings

The hearings will commence at 10 a.m. on July 20, 1993. At that time any procedural matters relating to the proceeding will be resolved.

The nature of an informal hearing is established in the legislative history of section 6 of the Act and is reflected by the OSHA hearing regulations (see 29 CFR 1911.15 (a)). Although the presiding officer is an Administrative Law Judge and questioning by interested persons is allowed on crucial issues, the proceeding shall remain informal and legislative in type. The essential intent is to provide an opportunity for effective oral presentations which can proceed expeditiously, in the absence of rigid procedures which impede or protract the rulemaking process.

Additionally, since the hearing is primarily for information gathering and clarification, it is an informal administrative proceeding, rather than an adjudicative one. The technical rules of evidence, for example, do not apply. The regulations that govern hearings and the pre-hearing guidelines to be issued for this hearing will ensure fairness and due process and also facilitate the development of a clear, accurate and complete record. Those rules and guidelines will be interpreted in a manner that furthers that development. Thus, questions of relevance, procedure and participation generally will be decided so as to favor development of the record.

The hearing will be conducted in accordance with 29 CFR part 1911. The hearing will be presided over by an Administrative Law Judge who makes no recommendation on the merits of OSHA's proposal. The responsibility of the Administrative Law Judge is to ensure that the hearing proceeds at a reasonable pace and in an orderly manner. The Administrative Law Judge, therefore, will have all the powers necessary and appropriate to conduct a full and fair informal hearing as provided in 29 CFR part 1911 and the prehearing guidelines, including the powers:

1. To regulate the course of the proceedings;

2. To dispose of procedural requests, objections, and comparable matters;

3. To confine the presentation to the matters pertinent to the issues raised;

4. To regulate the conduct of those present at the hearing by appropriate means;

5. At the Judge's discretion, to question and permit the questioning of any witness and to limit the time for questioning; and

6. At the Judge's discretion, to keep the record open for a reasonable, stated time to written information and additional data, views and arguments from any person who has participated in the oral proceeding.

Certification of Record and Final Determination After Hearing

Following the close of the posthearing comment period, the presiding Administrative Law Judge will certify the record to the Assistant Secretary of Labor for Occupational Safety and Health. The Administrative Law Judge does not make or recommend any decisions as to the content of the final standard.

The proposed standard will be reviewed in light of all testimony and written submissions received as part of the record, and a standard will be issued based on the entire record of the proceeding, including the written comments and data received from the public.

List of Subjects in 29 CFR Part 1910

Chemicals, 2-Ethoxyethanol, 2-Ethoxyethanol acetate, Glycol ethers, 2-Methoxyethanol, 2-Methoxyethanol acetate, Occupational safety and health, Reproductive and developmental toxicity.

XIII. Authority and Signature

This document was prepared under the direction of David C. Zeigler, Acting Assistant Secretary of Labor, 200 Constitution Avenue, NW., Washington, DC 20210.

It is issued under sections 4, 6, and 8 of the Occupational Safety and Health Act of 1970 (29 U.S.C. 653, 655, 657), Secretary of Labor's Order 1–90 (55 FR 9033) and 29 CFR part 1911.

Signed at Washington, DC, this 9th day of March, 1993.

David C. Zeigler,

Acting Assistant Secretary of Labor.

XIV. The Proposed Standard

Part 1910—[AMENDED]

Part 1910 of title 29 of the Code of Federal Regulation is hereby proposed to be amended as follows:

Subpart B—[Amended]

1. The authority citation for subpart B of 29 CFR part 1910 continues to read as follows:

Authority: Secs. 4, 6, and 8 of the Occupational Safety and Health Act, 29 U.S.C. 653, 655, 657; Walsh-Healy Act, 41 U.S.C. 35 et seq; Service Contract Act of 1965, 41 U.S.C. 351 et seq; sec. 107, Contract Work Hours and Safety Standards Acts (Construction Safety Act), 40 U.S.C. 333; sec 41, Longshoremen's and Harbor Worker's Compensation Act, 33 U.S.C. 941; National Foundation of Arts and Humanities Act, 20 U.S.C. 951 et seq., Secretary of Labor's Order No., 12–71 (36 FR 8754); 8–76 (41 FR 25059), or 9–83 (48 FR 35736), as applicable; and 29 CFR part 1911.

Sections 1910.16 and 1910.19 also issued under 29 CFR Part 1911.

2. A new paragraph (n) is proposed to be added to 1910.19 to read as follows:

§ 1910.19 Special provisions for air contaminants.

* * * * *

(n) *Glycol ethers.* Section 1910.1031 shall apply to the exposure of every employee to glycol ethers, as defined in § 1910.1031, in every employment and place of employment covered by §§ 1910.12, 1910.13, 1910.14, 1910.15, 1910.16, 1910.26 and 1910.28 in lieu of any different standard on exposures to glycol ethers which would otherwise be applicable by virtue of those sections.

Subpart Z—[Amended]

3. The authority citation for subpart Z of part 1910 continues to read as follows:

Authority: Secs. 6, 8 Occupational Safety and Health Act, 29 U.S.C. 655, 657: Secretary of Labor's Order 12–71 (36 FR 8754), 9–76 (41 FR 25059), 9–83 (48 FR 35736) or 1–90 (55 FR 9033), as applicable; and 29 CFR Part 1911.

All of subpart Z issued under section 6(b) of the Occupational Safety and Health Act, listed in the Final Rule Limits columns of Table Z–1–A, which have identical limits listed in the Transitional Limits columns of Table Z–1–A, Z–2 or Table Z–3. The latter were issued under section 6(a) (29 U.S.C. 655(a)).

Section 1910.1000, the Transitional Limits columns of Table Z–1–A, Table Z–2 and Table Z–3 not issued under 5 U.S.C. 553. Section 1910.1000, the Transitional limits columns of Table Z–1–A. Table Z–2 and Table Z–3 not issued under 29 CFR part 1911 except for the arsenic, benzene, cotton dust, and formaldehyde listings.

Section 1910.1001 also issued under sec. 107 of Contract Work Hours and Safety Standards Act, 40 U.S.C. 333.

Section 1910.1002 not issued under 29 U.S.C. 655 or 29 CFR part 1911; also issued under 5 U.S.C. 553.

Sections 1910.1003 through 1910.1018 also issued under 29 CFR U.S.C. 653.

Section 1910.1025 also issued under 29 U.S.C. 653 and 5 U.S.C. 553.

Section 1910.1028 also issued under 29 U.S.C. 653.

Section 1910.1043 also issued under 5 U.S.C. 551 et seq.

Sections 1910.1045 and 1910.1047 also issued under 29 U.S.C. 653.

Section 1910.1048 also issued under 29 U.S.C. 653.

Sections 1910.1200, 1910.1499 and 1910.1500 also issued under 5 U.S.C. 553.

Section 1910.1450 is also issued under sec. 6(b), 8(c) and 8(g)(2), Pub. L. 91–596, 84 Stat. 1593, 1599, 1600; 29 U.S.C. 655, 657.

§ 1910.1000 [Amended]

4. The entries "2-Ethoxyethanol", "2-Ethoxyethyl acetate (Cellosolve Acetate)", "2-Methoxyethanol; see Methyl Cellosolve", "Methyl Cellosolve (2-Methoxyethanol)" and "Methyl Cellosolve Acetate (2-Methoxyethyl Aceate)" are proposed to be deleted from Table Z–1–A of 1910.1000.

5. A new § 1910.1031 and appendices A, B, C, D, E and F to the section are proposed to be added to subpart Z to read as follows:

§ 1910.1031 Glycol ethers.

(a) *Scope and application*—(1) This section applies to all occupational exposures to 2-Methoxyethanol (2-ME), 2-Methoxyethanol Acetate (2-MEA), 2-Ethoxyethanol (2-EE) and 2-Ethoxyethanol Acetate (2-EEA) Chemical Abstracts Service Registry Nos. 109–86–4, 110–49–6, 110–80–5 and 111–15–9, respectively, except as provided for in paragraph (a)(2) of this section.

(2) This section does not apply to:

(i) Work operations where the only exposure to 2-ME, 2-MEA, 2-EE, or 2-EEA is from liquid mixtures containing less than 1% 2-ME, 2-MEA, 2-EE or 2-EEA, respectively, by volume, unless the employer has reason to believe that such mixtures could release vapors in quantities sufficient to result in an airborne concentration which meets or exceeds the action levels or exceeds the excursion limits for these compounds or could present a hazard through dermal contact.

(ii) Work operations using solid materials made from or containing 2-ME, 2-MEA, 2-EE or 2-EEA that are incapable of releasing 2-ME, 2-MEA, 2-EE or 2-EEA to the workplace air in concentrations at or above the AL or above the EL.

(b) *Definitions.* For purposes of this standard, the following definitions shall apply:

Action Level (AL) means airborne concentrations of 0.05 ppm (2-ME or 2-MEA) and 0.25 ppm (2-EE or 2-EEA) calculated as an 8-hour time-weighted average (TWA).

Assistant Secretary means the Assistant Secretary of Labor for

Occupational Safety and Health, U.S. Department of Labor, or designee.

Authorized person means any person specifically authorized by the employer whose duties require the person to enter a regulated area, or any person entering such an area as a designated representative of employees for the purpose of exercising the right to observe monitoring and measuring procedures under paragraph (d) of this section, or any other person authorized by the Act or regulations issued under the Act.

Director means the Director of the National Institute for Occupational Safety and Health, U.S. Department of Health and Human Services, or designee.

Emergency means any occurrence such as, but not limited to, equipment failure, rupture of containers, or failure of control equipment which may or does result in an unexpected significant release of glycol ethers.

Employee exposure means the exposure to airborne or liquid glycol ethers which would occur if the employee were not using respiratory protective equipment or other personal protective equipment.

Ethylene glycol ethers, for the purposes of this section, means 2-Methoxyethanol (2-ME) (CAS No. 109–86–4), 2-Methoxyethanol acetate (2-MEA) (CAS No. 110–49–6), 2-Ethoxyethanol (2-EE) (CAS No. 110–80–5) and 2-Ethoxyethanol acetate (2-EEA) (CAS No. 111–15–9).

Glycol ethers is defined the same as "Ethylene glycol ethers" above.

Objective Data means information which can be used to reliably calculate the anticipated airborne concentration of a compound in a work area. Such information may include, but is not limited to, physical properties of the compound, room dimensions, air exchange rates, information on work practices, historical data on employee exposures, and employee proximity to emissions sources.

Regulated area means any area where airborne concentrations of glycol ethers exceed or can be reasonably be expected to exceed the permissible exposure limits (PELs), either the 8-hour time weighted average (TWA) limits of 0.1 ppm (2-ME, 2-MEA) and 0.5 ppm (2-EE, 2-EEA) or as the 15-minute excursion limits (ELs) of 0.5 ppm (2-ME, 2-MEA) and 2.5 ppm (2-EE, 2-EEA).

(c) *Permissible exposure limits (PELs)*—(1) *Eight-Hour Time Weighted Average (TWA)* The employer shall assure that no employee is exposed to an airborne concentration of glycol ethers which exceeds 0.1 ppm for 2–ME and 2–MEA or 0.5 ppm for 2–EE and 2–EEA, calculated as an 8-hour time-weighted average (TWA).

(2) *Excursion Limit (EL)* The employer shall assure that no employee is exposed to an airborne concentration of glycol ethers in excess of 0.5 ppm for 2–ME and 2–MEA or 2.5 ppm for 2–EE and 2–EEA, averaged over a sampling period of 15 minutes. Monitoring for EL is to be conducted during the period in which the employee would be expected to receive his/her highest level of exposure.

(3) *Dermal Exposure* The employer shall assure that no employee is exposed to glycol ethers through dermal contact.

(d) *Exposure monitoring*—(1) *General*—(i) Except as provided by paragraph (d)(1)(v) of this section, each employer who has a workplace or work operation covered by this section shall accurately determine the level of employee exposure to glycol ethers.

(ii) Determinations of employee exposure shall be made from personal breathing zone air samples that accurately reflect each employee's average exposures to airborne glycol ethers over an 8-hour period (AL and TWA) and over a 15-minute period at operations where there is reason to believe that exposures may be above the excursion limit (EL).

(iii) The employer shall determine 8-hour TWA employee exposures for each employee in each job classification in each work area during each shift. At operations where there is reason to believe that exposures may be above the excursion limit (EL), the employer shall determine the EL employee exposures for each job classification in each work area during each shift.

(iv) Except for initial monitoring required in paragraphs (d)(2)(i) and (d)(2)(ii) of this section, the employer may develop a representative sampling strategy that sufficiently monitors exposure levels within each job classification or for each job task, for each workshift, in each work area to correctly characterize and not underestimate the exposure of any employee within each exposure group. In representative sampling, the employer shall sample those employees expected to have the highest exposures. Exposure levels shall be determined for each employee in each job classification in each work area for each shift unless the employer can document that exposure levels for a given job classification are equivalent for different workshifts.

(v) Where the employer has objective data, as defined in paragraph (b) of this section, showing the presence of glycol ethers in the workplace or products containing glycol ethers cannot result in the release of airborne concentrations of glycol ethers that would cause any employee to be exposed at or above the AL or above the EL, under worst-case release conditions of foreseeable use, the employer may rely upon such data and is not required to monitor employee exposure levels to glycol ethers.

(2) *Initial Monitoring.* (i) Except as provided in paragraphs (d)(1)(v) or (d)(2)(ii) of this section, each employer shall identify all employees who, without regard to respirator use, are exposed or may reasonably be anticipated to be exposed, at or above the AL or above the EL and shall perform initial monitoring to accurately determine the exposure of all employees so identified.

(ii) Where the employer has monitored an employee who is at or above the AL and/or above the EL after [180 DAYS PRIOR TO EFFECTIVE DATE OF THE FINAL RULE] and the monitoring occurred under conditions closely resembling those currently prevailing and that monitoring satisfies all other requirements of this section, the employer may rely on such monitoring results to satisfy the requirements of paragraph (d)(2)(i) of this section with respect to the employee monitored.

(3) *Periodic monitoring.* (i) The employer shall periodically measure and accurately determine exposure to glycol ethers for employees shown by the initial or other monitoring to be exposed at or above the action level (AL) or above the EL.

(ii) If the initial or periodic monitoring results reveal employee exposure to be at or above the AL but at or below the TWA, the employer shall monitor these employees at least every 6 months.

(iii) If the initial or periodic monitoring results reveal employee exposure above the TWA, the employer shall monitor these employees at least every 3 months.

(iv) If the initial or periodic monitoring results reveal employee exposure above the EL, the employer shall monitor these employees at least every 3 months under conditions of highest exposure.

(4) *Additional monitoring.* The employer shall also institute the exposure monitoring required under paragraphs (d)(2)(i) and (d)(3) of this section each time there is a change in production, equipment, raw materials, process, personnel, or work practices that may result in new or additional exposure to glycol ethers at or above the ALs or above the ELs, or whenever the employer has any other reason to

suspect that a change may result in new or additional exposures at or above the ALs or above ELs.

(5) *Termination of Monitoring.* (i) If the initial monitoring reveals employee exposure to be below the ALs and at or below the ELs, the employer may discontinue monitoring for that employee, except as noted otherwise in paragraph (d)(4) of this section.

(ii) If the periodic monitoring indicates that employee exposures are below the ALs and at or below the ELs and that result is confirmed by the results of another monitoring taken at least 7 days later, the employer may discontinue the monitoring for those employees whose exposures are represented by such monitoring. The results must be statistically representative and consistent with the employer's knowledge of the job and work operation.

(iii) If initial or periodic monitoring reveals employee exposure at or above the AL, but on two consecutive measurements taken at least seven days apart, the employee exposure is not above the EL, no further monitoring for the EL is necessary except as required by paragraph (d)(4) of this section.

(6) *Accuracy of measurement.* The employer shall use a method of monitoring and analysis that shall be accurate, (to a 95 percent confidence level), to within plus or minus 25 percent for airborne concentrations of glycol ethers at or above the level being investigated.

(7) *Employee notification of monitoring results.* (i) Within 15 working days of receiving the results of exposure monitoring conducted under this section, the employer shall notify each affected employee, individually, of these results in writing. In addition, within the same period, the employer shall post the results in an appropriate location that is accessible to affected employees.

(ii) Whenever monitoring results indicate that employee exposure is over the TWA and/or EL permissible exposure limits, the employer shall include in the written notice a statement that the TWA and/or EL has been exceeded and a description of the corrective action being taken by the employer to decrease the exposure to within the permissible exposure limits.

(8) *Observation of monitoring.* (i) The employer shall provide affected employees or their designated representative an opportunity to observe any monitoring of employee exposure to glycol ethers required by this section.

(ii) When observation of the monitoring of employee exposure to glycol ethers requires entry into an area where the use of protective clothing or equipment is required, the employer shall provide and require the observer to use such clothing and equipment and shall assure that the observer complies with all other applicable safety and health procedures.

(e) *Regulated areas.* (1) The employer shall establish regulated areas wherever exposures to glycol ethers exceed or can be expected to exceed either the TWA or EL permissible exposure limits prescribed in paragraph (c) of this section.

(i) These areas shall be demarcated from the rest of the workplace in any manner that adequately establishes and alerts employees to the boundary of the regulated area.

(ii) Regulated areas shall be posted at all entrances and accessways with signs as specified in paragraph (m)(1)(i) of this section.

(2) The employer shall limit access to regulated areas to authorized persons.

(3) Whenever an employer at a multi-employer worksite establishes a regulated area, that employer shall communicate the location and restrictions of access to the regulated area to other employers with work operations at that worksite.

(4) The employer shall assure that each person entering a regulated area is provided with and required to use appropriate personal protective equipment, including respiratory protection selected in accordance with paragraph (g)(3) of this section.

(f) *Methods of compliance*—(1) *Engineering controls and work practices.* Whenever any employee is exposed to glycol ethers above either the TWA or EL permissible exposure limits prescribed in paragraph (c) of this section or may forseeably experience dermal exposure to glycol ethers, the employer shall institute engineering and work practice controls to reduce and maintain employee exposures to glycol ethers at or below the TWAs and the ELs and to eliminate dermal exposure to glycol ethers, except to the extent that the employer can establish that these controls are not feasible or where the provisions of paragraph (g) of this section apply.

(2) Whenever feasible engineering and work practice controls which can be instituted are not sufficient to reduce employee exposure to or below the TWA and/or EL permissible exposure limits or eliminate forseeable dermal exposure, the employer shall implement them to reduce employee exposures to the lowest levels achievable and shall supplement such controls with personal protective equipment and/or respiratory protection that complies with the requirements of paragraph (g) of this section.

(3) Engineering controls shall be inspected and maintained or replaced to ensure their effectiveness.

(4) The employer shall permit employees to leave the work area immediately or as soon as feasible to wash skin areas which have had contact with glycol ethers.

(5) *Compliance program.* (i) Where the TWAs and/or ELs are exceeded or dermal exposure exists, the employer shall establish and implement a written compliance program to reduce employee exposure to or below the TWA and/or EL permissible exposure limits and eliminate dermal exposure by means of engineering and work practice controls, as required by paragraph (f) of this section. To the extent that engineering and work practice controls cannot reduce exposures to or below the TWAs and/or ELs and/or eliminate dermal exposure, the employer shall include in the written compliance program the use of appropriate respiratory protection and/or personal protective equipment to achieve compliance. The compliance program shall include the written plan for emergency situations prescribed in paragraph (k) of this section.

(ii) The written compliance programs shall be reviewed and updated at least annually, or more often if necessary, to reflect significant changes in the employer's compliance status.

(iii) Written compliance programs shall be submitted upon request for examination and copying to affected employees, authorized employee representatives, the Assistant Secretary, and the Director.

(g) *Respiratory protection*—(1) *General.* Where respiratory protection is required by this section, the employer shall provide it at no cost to the employee and shall assure its proper use, in compliance with the requirements of this paragraph (g), to reduce employee exposures to or below the TWA and/or EL permissible exposure limits. Respiratory protection shall be used in the following circumstances:

(i) During the interval necessary to install or implement feasible engineering and work practice controls

(ii) In work operations, such as maintenance and repair activities and during brief or intermittent operations, for which the employer establishes that engineering and work practice controls are not feasible;

(iii) In work situations where the employer has implemented all feasible engineering and work practice controls and such controls are not sufficient to

reduce exposure to or below the TWA and/or EL permissible exposure limits, and;

(iv) In emergencies.

(2) *Assignment of respiratory protection.* No employee shall be assigned tasks requiring the use of respiratory protection if, based upon his or her most recent medical examination, an examining physician determines that the employee will be unable to function normally while wearing a respirator. Such employee shall be given the opportunity to transfer to a position where no respirator use is required. That position shall be with the same employer, in the same geographical area, and with the same seniority status and rate of pay the employee had just prior to such transfer, if such a position is available.

(3) *Respirator selection.* Where respiratory protection is required under this standard, the employer shall select and provide the appropriate respirator as specified in Table 1–1 of this section. The employer shall select respirators from among those approved by the Mine Safety and Health Administration (MSHA) and by the National Institute for Occupational Safety and Health (NIOSH) under the provisions of 30 CFR Part 11 or any future revisions.

TABLE 1–1. MINIMUM REQUIREMENTS FOR RESPIRATORY PROTECTION AGAINST 2–EE, 2–EEA, 2–ME, AND 2–MEA [2]

Condition of use or glycol ether concentration; (ppm 2–EE/2–EEA); (ppm 2–ME/2–MEA)	Minimum required respirator
Up to 10X the PEL (1 ppm) (5 ppm)	Supplied air half-mask respirator in negative pressure (demand) mode.[1]
Up to 25X the PEL (2.5 ppm) (12.5 ppm)	Supplied air respirator with hood or helmet in continuous flow mode.
Up to 50X the PEL (2 ppm) (25 ppm)	Supplied air half-mask in continuous flow mode.[1] Supplied air full facepiece in negative pressure (demand) mode. SCBA full facepiece in negative pressure (demand) mode.
Up to 250X the PEL (25 ppm) (125 ppm)	Supplied air full facepiece in continuous flow mode.
Up to 1000X the PEL (100 ppm) (500 ppm)	Supplied air half-mask or full facepiece in pressure demand mode.[1]

TABLE 1–1. MINIMUM REQUIREMENTS FOR RESPIRATORY PROTECTION AGAINST 2–EE, 2–EEA, 2–ME, AND 2–MEA [2]—Continued

Condition of use or glycol ether concentration; (ppm 2–EE/2–EEA); (ppm 2–ME/2–MEA)	Minimum required respirator
Greater then 1000X the PEL (>100 ppm) (>500 ppm)	SCBA in pressure demand mode.[1] Supplied air full facepiece in pressure demand mode in combination with auxiliary self-contained air supply.
Firefighting	SCBA in pressure demand mode.

[1] Full face piece is required when eye irritation is experienced.

[2] Respirators assigned for high environmental concentrations may be used for lower environmental concentrations.

(4) *Respirator program.* Where respirator use is required by this standard, the employer shall institute a respiratory protection program in accordance with 29 CFR 1910.134 (b), (d), (e), and (f).

(5) *Respirator use.* Employers shall permit employees to leave the work area to wash their faces and respirator facepieces as needed to prevent skin irritation from respirator use.

(6) *Respirator fit testing.* (i) The employer shall assure that the respirator issued to the employee exhibits the least possible facepiece leakage and that the respirator is fitted properly and will not permit the employee to inhale glycol ethers in excess of either the TWAs or ELs.

(ii) For each employee wearing a tight-fitting supplied-air respirator, employers shall perform either a quantitative or qualitative face fit test of the facepiece while it is equipped with appropriate air purifying elements. When quantitative fit testing is performed, half mask facepieces must exhibit a fit factor of 100 and full facepieces a fit factor of 500, at a minimum.

(iii) The employer shall perform and certify the results of the appropriate fit tests at the time of initial fitting, at least annually thereafter, when a different make or size respirator is used, and when a change in facial structure occurs.

(iv) Fit testing shall be performed at a reasonable time and place and at no cost to the employee and shall be conducted in accordance with appendix F of this section.

(h) *Personal protective equipment*—(1) *Provision and use.* The employee shall select and provide appropriate personal protective equipment, including clothing and eye protection, in accordance with 29 CFR 1910.132 and 1910.133.

(i) The employer shall select the appropriate personal protective equipment based upon the type of exposure anticipated, conditions of use, and the hazard to be prevented.

(ii) The employer shall provide the appropriate personal protective equipment at no cost to the employee and assure that employees use this equipment.

(iii) Personal protective equipment, such as, but not limited to, coveralls, gloves, faceshields, and rubber boots, shall be made of materials sufficiently impervious to glycol ethers to prevent employee exposure to these compounds.

(iv) The employer shall provide uncontaminated personal protective equipment as often as necessary and at least weekly to prevent employee exposure to glycol ethers.

(2) *Removal and storage.* (i) The employer shall assure that employees remove all personal protective equipment contaminated with glycol ethers prior to leaving the work area or as soon as feasible if the potential for soakthrough/breakthrough exists. This shall be done in an area which minimizes exposure of other employees.

(ii) The employer shall assure that no employee takes home personal protective equipment contaminated with glycol ethers.

(iii) The employer shall assure that no employee takes personal protective equipment contaminated with glycol ethers out of the workplace unless authorized to do so for the purposes of laundering, cleaning, maintenance, or disposal.

(iv) The employer shall assure that personal protective equipment contaminated with glycol ethers shall be stored in a manner so as to minimize employee exposure and not be worn again until cleaned or laundered.

(v) The employer shall assure that storage areas and containers with glycol ethers-contaminated personal protective equipment shall have a sign or label, respectively, as specified in paragraph (m)(1)(ii) of this section.

(3) *Cleaning, replacement, and disposal.* (i) The employer shall clean, launder, repair, and replace, at no cost to the employee, all required personal protective equipment for each affected employee as necessary to assure its effectiveness and shall be responsible for the disposal of these items.

(ii) The employer shall assure that only trained persons remove contaminated personal protective

equipment from storage for the purpose of laundering, cleaning, repair, or disposal.

(iii) The employer shall inform any person who launders, cleans, or repairs personal protective equipment contaminated by glycol ethers of the potentially harmful effects of exposure to glycol ethers and of procedures to safely handle the clothing and equipment.

(iv) The employer shall assure that laundering, cleaning, maintenance, and disposal are performed only at facilities which are appropriate to handle glycol ethers contaminated personal protective equipment.

(v) All contaminated personal protective equipment destined for disposal shall be placed in a sealed container which is labeled in accordance with paragraph (m)(1)(ii) of this section.

(i) *Hygiene protection*—(1) If employee's skin may become splashed with liquids containing glycol ethers, except as provided by paragraph (a)(2)(i) of this section, the employer shall provide conveniently located quick drench showers and assure that affected employees use these facilities immediately.

(2) If there is any possibility that an employee's eyes may be splashed with liquids containing glycol ethers, except as provided by paragraph (a)(2)(i) of this section, the employer shall provide eye-wash fountains within the immediate work area for emergency use.

(3) Eating, drinking, smoking, and application of cosmetics is prohibited in areas of glycol ethers exposure.

(4) Personal protective equipment shall not be worn in lunch areas.

(j) *Housekeeping*—(1) All surfaces (e.g., floors, working surfaces, exterior surfaces of equipment) shall be kept free of glycol ethers to the extent feasible.

(2) The employer shall conduct a program to detect leaks and spills, including visual inspections of operations involving liquids containing glycol ethers.

(3) Preventative maintenance of equipment, including surveys for leaks, shall be undertaken at intervals appropriate to assure proper functioning of the equipment.

(4) In work areas where spillage may occur, the employer shall make provisions to contain the spill, to decontaminate the work area, and to dispose of waste.

(5) The employer shall assure that all leaks are repaired and spills are cleaned up as soon as possible by employees wearing suitable protective equipment, which may include respiratory protection, and who are trained in proper methods of cleanup and decontamination.

(6) Waste and debris contaminated with glycol ethers shall be placed for disposal in sealed containers bearing a label as specified in paragraph (m)(1)(ii) of this section.

(k) *Emergencies*—(1) The employer shall develop a written emergency plan for each workplace or work operation covered by this section in accordance with the requirements of 29 CFR 1910.38(a). The provisions of 29 CFR 1910.120(q) remain in effect as applicable and an emergency response plan meeting the requirements of 29 CFR 1910.120(q) shall be deemed to meet the requirements for an emergency response plan in this paragraph (k).

(2) All employees shall be thoroughly trained in their responsibilities in the event of an emergency.

(3) The employer shall assure that only designated personnel, furnished with appropriate personal protective equipment which shall include respiratory protection, and who are trained in re-entry procedures shall correct the emergency conditions.

(4) The employer shall assure that appropriate personal protective, housekeeping, and other emergency equipment and supplies shall be located in each area where an emergency could occur.

(5) All employees, except those designated to correct the situation, shall be evacuated from and normal operations shall be halted in the area where the emergency occurred until the emergency has been abated.

(6) The employer shall make provisions for immediate evacuation, transportation, and medical assistance at a designated medical facility for affected employees.

(l) *Medical surveillance*—(1) *General.* (i) *Employees covered.* The employer shall institute medical surveillance programs for all employees who are or will be exposed to airborne concentrations of glycol ethers at or above the action level or above the excursion level.

(ii) *Examination by a physician.* The employer shall assure that all medical examinations and procedures are performed by or under the supervision of a licensed physician and are provided without cost to the employee, without loss of pay, and at a reasonable time and place. Persons who administer pulmonary function tests required by this standard shall complete a training course in spirometry sponsored by an appropriate governmental, academic or professional institution.

(2) *Initial examinations.* (i) Within 90 days of the effective date of this standard or before the time of assignment, whichever comes later, the employer shall provide each employee covered by paragraph (l)(1)(i) of this section with a medical examination including at a minimum the following elements:

(A) A medical and work history, including a reproductive history, with emphasis on the hematologic system, skin, eyes and symptoms related to pulmonary and mucous membrane irritation.

(B) A physical examination with emphasis given to hematologic and pulmonary system, mucous membranes, skin and eyes.

(C) A complete blood count to include at a minimum a red cell count, a white cell count, hemoglobin, and hematocrit.

(D) Pulmonary function testing for employees who are or will be wearing respiratory protection. As a minimum, these tests shall consist of forced vital capacity (FVC), forced expiratory volume in one second (FEV_1), and forced expiratory flow (FEF).

(E) Any other test which the examining physician deems necessary.

(ii) No initial medical examination is required to satisfy the requirements of paragraph (1)(2)(i) of this section if adequate records show that the employee has been examined in accordance with the procedures of paragraph (1)(2)(i) of this section after [TWELVE MONTHS PRIOR TO THE EFFECTIVE DATE OF THE FINAL RULE]. Results of tests meeting such requirements shall be provided to the physician to complete the written opinion.

(3) *Periodic examinations.* (i) Periodic medical examinations shall be made available at least annually.

(ii) The scope of the medical examination shall be made in conformance with the protocol established in paragraph (1)(2)(i) of this section.

(iii) Where the results of the examination of the respiratory system indicate abnormalities, or the employee experiences difficulty breathing during the use of or fit testing for respirators, the physician will further evaluate the employee's ability to wear a respirator.

(iv) Anytime the employee develops signs and symptoms commonly associated with toxic exposure to glycol ethers, or the employee desires medical advice or tests concerning the effects of current or past exposure to glycol ethers on the employee's ability to produce a healthy child, the employer shall provide the employee with an additional medical examination and/or a consultation which shall include those

elements considered appropriate by the examining physician.

(4) *Emergency Situations.* In addition to medical surveillance required in paragraphs (1)(1) through (1)(3) of this section, the employer shall make medical examinations available as soon as possible to all employees who may have been acutely exposed to glycol ethers in an emergency.

(5) *Information provided to the physician.* The employer shall provide the following information to the examining physician:

(i) A copy of this standard and appendices;

(ii) A description of the affected employee's former, current and anticipated future duties as they relate to the employee's glycol ethers exposure.

(iii) The employee's former or current occupational representative exposure level or anticipated exposure level;

(iv) A description of any personal protective equipment and respiratory protection used or to be used by the employee; and

(v) Information from previous medical examinations of the affected employee within the control of the employer.

(6) *Physician's written opinion.* (i) The employer shall obtain a written signed opinion from the examining physician. This written opinion shall contain the results of the medical examination except that it shall not reveal specific findings or diagnoses unrelated to occupational exposure to glycol ethers. The written opinion shall include:

(A) The physician's opinion as to whether the employee has any medical condition that would place the employee at an increased risk of material impairment of health from exposure to glycol ethers or from use of a respirator.

(B) The results of any testing or related evaluation concerning glycol ethers exposure carried out as part of the examination.

(C) The physician's opinion as to whether the employee is exhibiting symptoms and/or signs from overexposure to glycol ethers.

(D) The physician's opinion as to whether there is a need to reevaluate the effectiveness of the respirator used by the employee.

(E) Any recommended limitations on the employee's exposure to glycol ethers or upon the use of personal protective equipment, including respirators.

(F) A statement that the employee has been informed by the physician of any medical conditions which would be aggravated by exposure to glycol ethers, whether these conditions may have resulted from past glycol ethers exposure, and whether there is a need for further evaluation or treatment.

(ii) The employer shall provide a copy of the physician's written opinion to the affected employee within 15 days of its receipt.

(m) *Communication of glycol ethers hazards to employees*—(1) *Signs.* The employer shall post signs at all entry and accessways to regulated areas that appropriately warn of existing hazards and which bear, at a minimum, the following legend:

DANGER
GLYCOL ETHERS
[Specific chemical name(s)]
BLOOD AND REPRODUCTIVE HAZARD
EYE AND RESPIRATORY SYSTEM IRRITANT
AVOID INHALATION AND SKIN/EYE CONTACT
AUTHORIZED PERSONNEL ONLY
RESPIRATORY PROTECTION REQUIRED
[Any other appropriate warnings—e.g., "Flammable—No Smoking, Sparks, or Open Flame"]

(2) *Labels.* The employer shall assure that shipping and storage containers containing glycol ethers or glycol ethers-contaminated materials bear an appropriate warning label, which complies with the requirements of the Hazard Communication Standard, 29 CFR 1910.1200(f) of the General Industry Standards. At a minimum, these labels shall include the following legend:

DANGER
CONTAINS GLYCOL ETHERS
[Specific chemical name(s)]
BLOOD AND REPRODUCTIVE HAZARD
EYE AND RESPIRATORY SYSTEM IRRITANT
AVOID INHALATION AND SKIN/EYE CONTACT
[Any other appropriate warnings—e.g. "Flammable—Keep away from heat, sparks, and open flame"]

(3) *Material safety data sheets.* Employers who are manufacturers or importers of glycol ethers or glycol ethers-containing compounds shall comply with the requirements regarding development, updating, and distribution of material safety data sheets specified in 29 CFR 1910.1200(g) of OSHA's Hazard Communication Standard. All employers with employees potentially exposed to glycol ethers shall maintain material safety data sheets and provide their employees with access to them, in accordance with the requirements of 29 CFR 1910.1200(g).

(4) *Employee information and training.* (i) Employers who have a workplace or work operation covered by this section shall provide employees who are potentially exposed to glycol ethers with information and training in accordance with the requirements of the Hazard Communication Standard, 29 CFR 1910.1200(h) of the General Industry Standards.

(ii) The employer shall institute a training program for all employees who are potentially exposed to glycol ethers, assure each employee's participation in the program, maintain a record of this participation, and maintain a record of the contents of such program.

(iii) Training shall be provided, at no cost to the employee, prior to or at the time of initial assignment to a job involving potential exposure to glycol ethers, at least annually thereafter, and whenever a new hazard from glycol ethers is introduced into their work area.

(iv) The employer shall conduct the training program in a manner that the employee is able to understand. The employer shall assure that each employee is informed of at least the following:

(A) The health hazards associated with glycol ethers exposure with special attention to the information in appendix A of this section;

(B) The quantity, location, manner of use, release, and storage of glycol ethers at the worksite and the specific nature of operations that could result in exposure to glycol ethers, especially exposures above the TWAs or ELs;

(C) An explanation of the importance of engineering and work practice controls for employee protection and necessary instruction in the use of these controls;

(D) The measures employees can take to protect themselves from exposure to glycol ethers, such as diligent personal hygiene and proper use of personal protective equipment, and specific procedures the employer has implemented to protect employees against exposure, including appropriate work practices, emergency procedures, and personal protective equipment.

(E) The details of the hazard communication program developed by the employer, including an explanation of the signs, labeling system, and material safety data sheets and how employees can obtain and use the appropriate hazard information;

(F) The purpose, proper selection, fitting, proper use, and limitations of respiratory protection and personal protective clothing and eyewear;

(G) The purpose and description of the medical surveillance program

required by paragraph (l) of this section including the right of any employee exposed to glycol ethers at or above the AL or above the EL to obtain:

(1) Medical examinations as required by paragraph (l) of this section at no cost to the employee;

(2) The employee's medical records required to be maintained by paragraph (n)(2) of this section;

(3) All air monitoring results representing the employee's exposure to glycol ethers and required to be kept by paragraph (n)(1) of this section.

(H) A copy of this standard and its appendices with a discussion of its contents;

(I) Instructions for the handling of spills and cleanup procedures;

(J) A review of emergency procedures including the specific duties or assignments of each employee in the event of an emergency;

(n) *Recordkeeping*—(1) *Exposure measurements.* (i) The employer shall establish and maintain an accurate record of all measurements required by paragraph (d) of this section, in accordance with 29 CFR 1910.20.

(ii) This record shall include at least the following:

(A) The name, social security number, and job classification of the employee(s) monitored and all other employees whose exposure the measurement is intended to represent;

(B) The dates of monitoring, sample identification number, sampling duration, time of day, and exposure monitoring results of each of the samples taken, including a description of the procedure used to determine representative employee exposures. Exposure monitoring results shall be expressed, at a minimum, as either an 8-hour time-weighted-average (TWA) or a 15-minute excursion limit (EL), whichever is applicable;

(C) The operation(s) covered by the monitoring;

(D) The sampling and analytical methods used and evidence of their accuracy;

(E) The type of respiratory protective devices worn, if any; and

(F) Any other conditions that might have affected the employee monitoring results.

(iii) The employer shall maintain a record of the objective data relied upon to support the determination that no employee is exposed to glycol ethers at or above the action level or EL whenever the employer has used objective data to determine that no monitoring is required under this section.

(iv) The employer shall maintain this record for at least the duration of employment plus 30 years in accordance with 29 CFR 1910.20.

(2) *Medical surveillance.* (i) The employer shall establish and maintain an accurate record for each employee subject to medical surveillance required by paragraph (l) of this section, in accordance with 29 CFR 1910.20.

(ii) This record shall include at least the following information:

(A) The name and social security number of the employee;

(B) The physician's written opinions from the initial, periodic and additional examinations;

(C) Any employee medical complaints related to exposure to glycol ethers;

(D) A copy of the information provided by the employer to the physician as required by paragraph (l)(5)(ii) through (l)(5)(v) of this section;

(E) A copy of the medical and reproductive histories, medical questionnaire responses, and the results of any medical tests required by the standard or mandated by the examining physician.

(iii) The employer shall assure that this record is maintained for at least the duration of employment plus 30 years, in accordance with 29 CFR 1910.20.

(3) *Training.* The employer shall maintain all employee training records for one (1) year beyond the last date of employment of that employee.

(4) *Availability.* (i) The employer shall assure that all records required to be maintained by this section shall be made available upon request to the Assistant Secretary and the Director for examination and copying.

(ii) The employer shall provide upon request for examination and copying, all employee exposure monitoring records required to be maintained by paragraph (n)(1) of this section to affected employees, former employees, and designated representatives in accordance with 29 CFR 1910.20 (a) through (e) and (g) through (i).

(iii) The employer shall provide upon request for examination and copying, all employee medical records required to be maintained by paragraph (n)(2) of this section to the subject employee and to anyone having the specific written consent of the subject employee in accordance with 29 CFR 1910.20.

(5) *Transfer of records.* If the employer ceases to do business, the employer shall comply with the requirements involving transfer of records set forth in 29 CFR 1910.20(h).

(o) *Dates*—(1) *Effective date.* This section is effective [60 DAYS AFTER PUBLICATION OF THE FINAL RULE]. All obligations under this section commence on the Effective Date (ED), except as follows:

(2) *Start-up-dates.* (i) *Exposure monitoring.* Initial monitoring required by paragraph (d) of this section shall be completed as soon as possible and in any event not later than [90 DAYS AFTER THE EFFECTIVE DATE OF THIS SECTION].

(ii) *Training.* Training required by paragraph (m)(4) of this section shall be completed as soon as possible and in any event not later than [90 DAYS AFTER THE EFFECTIVE DATE OF THIS SECTION].

(iii) *Regulated areas.* Regulated areas required to be established by paragraph (e) of this section shall be set up as soon as possible after the results of exposure monitoring are known and in any event not later than [120 DAYS AFTER THE EFFECTIVE DATE OF THIS SECTION].

(iv) *Respiratory protection.* Respiratory protection required by paragraph (g) of this section shall be provided as soon as possible and in any event not later than [120 DAYS AFTER THE EFFECTIVE DATE OF THIS SECTION].

(v) *Medical surveillance.* Medical surveillance required by paragraph (l) of this section shall be completed as soon as possible or in any event not later than [120 DAYS AFTER THE EFFECTIVE DATE OF THIS SECTION].

(vi) *Emergency Plan.* The emergency plan required by paragraph (k) of this section shall be completed as soon as possible and in any event not later than [180 DAYS AFTER THE EFFECTIVE DATE OF THIS SECTION].

(vii) *Compliance program.* The written compliance program required by paragraph (f)(5) of this section shall be completed and available for inspection and copying as soon as possible and in any event not later than [1 YEAR AFTER THE EFFECTIVE DATE OF THIS SECTION].

(viii) *Showers and eyewashes.* Showers and eyewashes required by paragraph (i) of this section shall be installed and usable as soon as possible and in any event not later than [1 YEAR AFTER THE EFFECTIVE DATE OF THIS SECTION].

(ix) *Methods of Compliance.* Engineering controls required by this standard shall be implemented as soon as possible, but not later than [2 YEARS AFTER THE EFFECTIVE DATE OF THIS SECTION]. Work practices shall be implemented as soon as possible. Work practice controls that are directly related to engineering controls being installed in accordance with the compliance plan shall be implemented as soon as these engineering controls are functional.

(p) *Appendices.* The information contained in appendices A, B, C, D and

E of this section is not intended, by itself, to create any additional obligations not otherwise imposed or to detract from existing regulations. The protocols on respiratory fit testing in appendix F are part of this section and are mandatory.

Appendix A to § 1910.1031—Substance Safety Data Sheet for Glycol Ethers

I. Substance Identification

A. *Substance*: Glycol Ethers (2-Methoxyethanol, 2-Methoxyethanol acetate, 2-Ethoxyethanol and 2-Ethoxyethanol acetate).

B. *Permissible Exposure*:

1. Airborne:
   A. 8-Hour Time Weighted Average (TWA-PEL): 2-ME: 0.1 ppm 2-MEA: 0.1 ppm 2-EE: 0.5 ppm 2-EEA: 0.5 ppm
   B. Excursion Limit (EL) 15 Minute: 2-ME: 0.5 ppm 2-MEA: 0.5 ppm 2-EE: 2.5 ppm 2-EEA: 2.5 ppm
2. Dermal: Contact with eyes or skin should be eliminated.

II. Health Hazard Data

A. Glycol ethers can affect your body if you inhale the vapor (breathing), if it comes into contact with your eyes or skin, or if you swallow it.

B. *Effects of over exposure*:

1. *Short term exposure*: Glycol ethers can cause eye and upper respiratory tract irritation. In addition they can be mildly irritating to skin. Ingestion of large doses of glycol ethers may cause vomiting or lead to death. Systemic effects from short-term high exposures may include lung, kidney and brain damage.
2. *Long term exposure*: Repeated or prolonged exposure to glycol ethers may cause kidney, liver and lung damage as well as central nervous system depression and anemia. Glycol ethers have also been shown to cause testicular degeneration, reduced sperm counts, fetal with and malformations, and adverse hematologic effects in several animal species.

III. Emergency First Aid Procedures

A. *Eye exposure*: If glycol ethers get into your eyes, wash immediately with large amounts of water, lifting the lower and upper lids occasionally. If irritation is present after washing, get medical attention. Contact lenses should not be worn when working with glycol ethers.

B. *Skin exposure*: If glycol ethers get on the skin, promptly wash the contaminated skin with water. If glycol ethers soak through your clothing, remove the clothing and wash the skin with water. If irritation persists after washing, get medical attention. Wash the clothing thoroughly before reusing.

C. *Inhalation*: If a person breaths in large amounts of glycol ethers, move the exposed person to fresh air at once. If breathing has stopped perform artificial respiration. Keep the affected person warm and at rest. Get medical attention as soon as possible.

D. *Swallowing*: When glycol ethers have been swallowed, get medical attention immediately. If medical attention is not immediately available, get the afflicted person to vomit by having him touch the back of this throat with his finger or by giving him syrup of ipecac as directed on the package. This non-prescription drug is available at most drug stores and drug counters and should be kept with emergency medical supplies in the workplace. Do not make an unconscious person vomit.

E. *Rescue*: Move the effected person from the hazardous exposure. If the exposed person has been overcome, notify someone else and put into effect the established emergency rescue procedures. Do not become a casualty. Understand the facility's emergency rescue procedures and know the locations of rescue equipment before the need arises.

IV. Protective Clothing and Equipment

A. *Respirators*: Respirators are required for those operations in which engineering controls or work practice controls are not feasible to reduce exposure to the permissible level. If respirators are worn, they must have joint Mine Safety and Health Administration and the National Institute for Occupational Safety and Health (NIOSH) seal of approval. For effective protection, respirators must fit the face and head snugly. Respirators should not be loosened or removed in work situations where their use is required. Glycol ethers do not have detectable odors except at levels above permissible levels. Do not depend on odor to warn you when a respirator is malfunctioning.

If you experience difficulty breathing while wearing a respirator, tell your employer. You must be thoroughly trained to use the assigned respirator, and the training will be provided, at no cost to you, by your employer.

B. *Protective Clothing*: You must wear impervious clothing, gloves, face shield, or other appropriate protective clothing to prevent skin contact with liquid glycol ethers. Wherever protective clothing is required, your employer is required to provide, at no cost, clean garments to you as necessary to assure that the clothing protects you from dermal exposure to glycol ethers.

C. *Eye Protection*: You must wear splashproof goggles in areas where liquid glycol ethers may contact your eyes. In addition, contact lenses should not be worn in areas where eye contact with glycol ethers can occur.

V. Medical Requirements

If you are will be exposed to glycol ethers at or above the action level, (0.05 ppm(2-ME/2-MEA) or 0.25 ppm (2-EE/2-EEA) as an 8-hour time weighted average), or above 0.5 ppm(2-ME/2-MEA) or 2.5 ppm(2-EE/2-EEA) as a 15-minute excursion limit, your employer is required to provide a medical examination and history and laboratory tests within 90 days of the effective date of this standard or before the time of assignment to an area at or above the action level or above the excursion limit, which ever comes later and annually thereafter. These tests shall be provided without cost to you. In addition, if you are accidentally exposed to glycol ethers (either by ingestion, inhalation, or skin/eye contact) under conditions known or suspected to constitute toxic exposure to glycol ethers, your employer is required to make a medical examination available to you.

VI. Observation of Monitoring

Your employer is required to make measurements that are representative of your exposure to glycol ethers and you or your designated representative are entitled to observe the steps taken in the measurements procedure, and to record the results obtained. When the monitoring procedure is in an area where respirators or personal protective clothing must be worn you or your representative must also be provided with, and must wear the protective clothing and equipment.

VII. Access to Records

You or your representative are entitled to see the records of measurements of your exposure to glycol ethers upon written request to your employer. Your medical examination records can be furnished to your physician or designated representative upon request by you to your employer.

VIII. Precautions for Safe Use, Handling and Storage

Glycol ether liquids are flammable. They should be stored in closed containers in cool, well ventilated areas. Non sparking tools must be used to open and close containers. Glycol ethers vapors may form explosive mixtures in air. All sources of ignition must be controlled. Fire extinguisher, where provided, must be readily available. Know where they are located and how to operate them. Ask your supervisor where glycol ethers are used in your work area and for additional plant safety rules.

Appendix B to § 1910.1031—Substance Technical Guidelines for Glycol Ethers

I. 2-Methoxyethanol

A. *Physical and Chemical Data*

1. *Substance Identification*
   Chemical name: 2-Methoxyethanol
   Formula: $CH_3OCH_2CH_2OH$
   Molecular Weight: 76
   Chemical Abstracts Service (CAS) NO.: 109-86-4
   Synonyms: Methyl Cellosolve; Ethylene glycol monomethyl ether; methyl oxitol; Ektasolve; Jeffersol EM.
2. *Physical data*
   Boiling point (760 mm Hg): 124. °C
   Freezing point: −85.1 °C
   Specific Gravity (H_2O=1 @ 20 °C): 0.9663
   Vapor Pressure (20 °C): 6 mm Hg
   Vapor Density (air=1 @ 20 °C): 2.6
   Solubility in H_2O (% by wt @ 20 °C): miscible in all proportions.

Appearance and Odor: colorless liquid with a mild, pleasant ordor.

B. *Fire, Explosion and Reactivity Data*

Large quantities may be collected and atomized in a suitable combustion chamber.

2. *Disposal*. 2–ME may be disposed of by atomizing in a suitable combustion chamber.

II. 2-Methoxyethanol acetate

A. *Physical and Chemical Data*

1. *Substance Identification*

Chemical name: 2-Methoxyethanol acetate

Formula: $CH_3COOCH_2CH_2OCH_3$

Molecular Weight: 118.13

CAS No.: 110–49–6

Synonyms: Methyl Cellosolve acetate, ethylene glycol monomethyl ether acetate,

2 *Physical data*

Boiling point: 144 °C

Freezing point: −70 °C

Specific Gravity (H_2O=1 @ 20 °C): 1.01

Vapor Pressure (20 °C): 2 mm Hg

Vapor Density (air=1 @ 20 °C): 4.1

Solubility in H_2O (% by wt @ 20 °C): completely miscible

Appearance and Odor: Colorless liquid with mild, ether-like odor.

1. *Fire*

Flammable limits in air (% by volume): Lower: 2.3 Upper: 24.5.

Flash point: 39 °C (closed cup)

Extinguishing media: Dry chemical, alcohol foam, carbon dioxide.

Fire and Explosion Hazards: Moderate fire hazard when exposed to heat or flame. Forms explosive peroxides in air. Vapors are heavier than air and may travel a considerable distance to source of ignition and flash back.

2. *Reactivity*

Conditions contributing to instability: Heat

Incompatibilities: Strong oxidizing agents, strong caustics.

Hazardous decomposition products: Thermal decomposition products may include toxic oxides of carbon.

C. *Spill, Leak and Disposal Procedures*

1. *Steps to be taken if the material is released or spilled.* Remove all ignition sources and ventilate the area of spill or leak. Stop leak if you can do it without risk. Use water to reduce vapors. For small quantities, absorb on paper towels and evaporate in a safe place (such as a fume hood). Burn the paper in a suitable location away from combustible materials.

B. *Fire, Explosion and Reactivity Data*

1. *Fire*

Flammable limits in air (% by volume): Lower: 1.7 Upper: 8.2

Flash point: 44 °C (closed cup).

Extinguishing media: Dry chemical, alcohol foam, carbon dioxide.

Fire and Explosion Hazards: Moderate fire hazard when exposed to heat or flame. Forms explosive peroxides in air. Vapors are heavier than air and may travel a considerable distance to source of ignition and flash back.

2. *Reactivity*

Conditions contributing to instability: Heat

Incompatibilities: Strong acids, strong alkalies, strong oxidizers.

Hazardous decomposition products: Toxic vapors and gases (such as carbon monoxide). Thermal decomposition may release acrid smoke or irritating fumes.

C. *Spill Leak and Disposal Procedures*

1. *Steps to be taken if the material is released or spilled.* Remove all ignition sources and ventilate the area of spill or leak. Stop leak if you can do so without risk. Use water to reduce vapors. For small quantities, absorb on paper towels and evaporate in a safe place (such as a fume hood). Burn the paper in a suitable location away from combustible materials. Large quantities may be collected and atomized in a suitable combustion chamber.

2. *Disposal*. 2–MEA may be disposed of by absorbing it in vermiculite, dry sand, earth or a similar material and disposing it in a secured landfill or by atomizing in a suitable combustion chamber.

III. 2-Ethoxyethanol

A. *Physical and Chemical Data*

1. *Substance Identification*

Chemical name: 2-Ethoxyethanol

Formula: $C_2H_20CH_2CH_2OH$

Molecular weight: 90.12

CAS No.: 110–80–5

Synonyms: Cellosolve, Ethylene glycol monoethyl ether.

2. *Physical data*

Boiling point: 135.6 °C

Freezing point: −70 °C

Specific Gravity (H_2O=1@ 20 °C): .93

Vapor Pressure (20 °C): 4mm Hg

Vapor Density (air=1@ 20 °C): 3.0

Solubility in H_2O (% by wt @ 20 °C): Miscible in all proportions.

Appearance and Odor: Colorless liquid with sweetish odor.

B. *Fire, Explosion and Reactivity Data*

1. *Fire*

Flammable limits in air (% by volume): Lower: 1.7 Upper: 15.6.

Flash point: 43 °C (closed cup)

Extinguishing media: Dry chemical, alcohol foam, carbon dioxide.

Fire and Explosion Hazards: Moderate fire hazard when exposed to heat or flame. Vapor air mixtures are explosive above flash point. Forms explosive peroxides in air. Vapors are heavier than air and may travel a considerable distance to source of ignition and flash back.

2. *Reactivity*

Conditions contributing to instability: Elevated temperatures.

Incompatibilities: Strong oxidizers, acid and alkalies.

Hazardous decomposition products: Toxic vapors and gases (such as carbon monoxide).

C. *Spill Leak and Disposal Procedures*

1. *Steps to be taken if the material is released or spilled.* Remove all ignition sources and ventilate the area of spill or leak. Stop leak if you can do so without risk. Use water to reduce vapors. For small quantities, absorb on paper towels and evaporate in a safe place (such as fume hood). Burn the paper in a suitable location away from combustible materials. Large quantities may be collected and atomized in a suitable combustion chamber.

2. *Disposal*. 2–EE may be disposed of by absorbing it in vermiculite, dry sand, earth or a similar material and disposing it in a secured landfill or by atomizing in a suitable combustion chamber.

IV. 2-Ethoxyethanol acetate

A. *Physical and Chemical Data*

1. *Substance Identification*

Chemical name: 2-Ethoxyethanol acetate

Formula: $C_2H_5OCH_2CH_2OCOCH_3$

Molecular weight: 132.16

CAS No.: 111–15–9

Synonyms: Cellosolve acetate, ethylene glycol monoethyl ether acetate

2. *Physical data*

Boiling point: 156.4 °C

Freezing point: −62 °C

Specific Gravity (H_2O=1@ 20 °C): .98

Vapor Pressure (20 °C): 2 mm Hg

Vapor Density (air=1@ 20 °C): 4.6

Solubility in H_2O (% by wt @ 20 °C): 23

Appearance and Odor: Colorless viscous liquid with a mild, non-residual odor.

B. *Fire, Explosion and Reactivity Data*

1. *Fire*

Flammable limits in air (% by volume): Lower: 1.7 Upper: 13

Flash point: 47 °C (closed cup)

Extinguising media: Dry chemical, alcohol foam, carbon dioxide.

Fire and Explosion Hazards: Moderate fire hazard when exposed to heat or flame. Vapor air mixtures are explosive above flash point. Forms explosive peroxides in air. Vapors are heavier than air and may travel a considerable distance to source of ignition and flash back.

2. *Reactivity*

Conditions contributing to instability: Heat

Incompatibilities: Nitrates, strong oxidizers, strong alkalies, strong acids.

Hazardous decomposition products: Toxic vapors and gases (such as carbon dioxide). Thermal decomposition produces acrid smoke and/or irritating toxic fumes.

C. *Spill Leak and Disposal Procedures*

1. *Steps to be taken if the material is released or spilled.* Remove all ignition sources and ventilate the area of spill or leak. Stop leak if you can do it without risk. Use water to reduce vapors. For small quantities, absorb on paper towels and evaporate in a safe place (such as a fume hood). Burn the paper in a suitable location away from combustible materials. Large quantities may be collected and atomized in a suitable combustion chamber.

2. *Disposal.* 2-EEA may be disposed of by absorbing it in vermiculite, dry sand, earth or a similar material and disposing it in a secured landfill or by atomizing in a suitable combustion chamber.

Appendix C to § 1910.1031—Medical Surveillance Guidelines for Glycol Ethers

I. Toxicology

Studies of inhalation exposures to glycol ethers have shown that these exposures produce adverse reproductive and developmental effects in several animal species. The effects observed include testicular damage, reduced fertility, maternal toxicity and developmental abnormalities of the fetus. Data from experimental animals have also demonstrated that exposure to glycol ethers may result in a variety of hematologic effects including hemolysis, bone marrow depression and reduced red and white blood cell counts. Adverse hematologic and testicular effects have also been observed in humans exposed to glycol ethers. Among these effects are testicular degeneration, reduced sperm count, anemia, lowered white blood cell counts and bone marrow depression. In addition to inhalation exposure, glycol ethers are also readily absorbed dermally and can also be swallowed. Exposure to glycol ethers in liquid form or high air concentrations may cause irritation of the eyes, nose and throat. Ingestion or large does may be fatal. Acute effects from overexposure also include drowsiness, weakness and shaking.

II. Signs and Symptoms of Acute Overexposure

Glycol ethers are only mildly irritating to the skin. Vapor may cause conjunctivitis and upper respiratory tract irritation. Temporary corneal clouding may also result and may last several hours. Acetate derivatives cause greater irritation than the parent compounds. Acute exposure may also result in narcosis, pulmonary edema and severe kidney and liver damage. Symptoms from repeated overexposure to vapors are fatigue and lethargy, headache, nausea, anorexia, and tremor. Anemia and encephalopathy have been reported with 2-ME. Acute poisoning by ingestion resembles glycol ether toxicity, with death from renal failure.

III. Surveillance and Preventative Considerations

As noted above glycol ethers have been connected with adverse reproductive, developmental and hematologic effects. The physician should be aware of the findings of these studies in evaluating the health of employees exposed to glycol ethers.

It is also important for the physician to become familiar with the operating conditions in which exposure to glycol ethers may occur. Employees with skin diseases may not be able to tolerate the wearing of whatever protective clothing may be necessary to protect them from exposure. In addition, employees with chronic respiratory disease may not be able to tolerate the wearing of respirators. The employer is required to institute a medical surveillance program for all employees who are or will be exposed above the action level or above the excursion limit without regard to the use of respirators. The medical surveillance program must provide each covered employee with an opportunity for medical examination. All examinations and procedures must be performed by or under the supervision of a licensed physician and be provided at a reasonable place and time at no cost to the employee. The examining physician is given broad latitude in prescribing specific tests to be included in the medical surveillance program. However, certain elements of an examination are suggested as being appropriate by the health data regarding the reproductive and hematologic effects. These elements include:

(i) Comprehensive medical, work and reproductive histories with special emphasis directed to the hematologic system and symptoms related to pulmonary and mucous membrane irritation.

(ii) A comprehensive physical examination with emphasis given to hematologic and pulmonary systems, mucous membranes, skin and eyes.

(iii) A complete blood count to include at least a red cell count, a white cell count, hemoglobin and hematocrit.

In addition, the physician must determine the worker's suitability for respirator use. Workers or job applicants who have medical conditions that would be aggravated by the use of a respirator need to receive counseling on the increased risk of impairment of their health. In certain cases, to provide sound medical advice to the employer and the employee, the physician must evaluate situations not directly related to glycol ethers. For example, employees with skin diseases, whether or not they are glycol ethers related, may be unable to tolerate wearing protective clothing. In addition, those with chronic respiratory diseases may not tolerate the wearing of respirators. Additional tests and procedures that will help the physician determine which employees are medically unable to wear respirators must include a pulmonary function test with measurement of the employee's forced vital capacity (FVC), and forced expiratory volume at one second (FEV_1). Ratios of FEV_1 to FVC as well as measured FVC and measured FEV_1 to their expected values corrected for variations due to age, sex, race, and height must be calculated. Whether a chest X-ray will provide useful information should be considered.

The employer is required to provide physical examinations to any employee exposed to emergency conditions. While little is known about the effects of high short-term exposures, it appears prudent to monitor such affected employers closely in light of existing health data.

The employer is required to provide the physician with the following information: a copy of this standard and appendices; a description of the affected employee's duties as they relate to the employee's exposure concentration; the exposure concentration from representative monitoring along with the employee's duration of exposure (e.g., 15 hr/wk, three 8-hour shifts a week, full-time); a description of any personal protective equipment, including respirators, used by the employee; and the results of any previous medical determinations related to glycol ethers exposure for the affected employee that are within the employer's control.

The employer is required to obtain the results of the medical examinations and a written statement from the physician. This statement must contain the physician's opinion as to whether the employee has any medical condition which would place the employee at increased risk of impaired health from exposure to glycol ethers or use of respirators. The physician must also state his opinion regarding any restrictions that should be placed on the employee's exposure to glycol ethers or upon the use of protective clothing or equipment such as respirators. The physician's opinion must also contain a statement regarding the suitability of the employee to wear the type of respirator assigned and a recommendation as to whether or not respirator fit testing should be conducted.

Finally, the physician must inform the employer that the employee has been informed by the physician of the results of the medical examination and of any medical conditions which require further explanation or treatment. This written opinion in not to contain any information on specific findings or diagnoses unrelated to occupational exposure to glycol ethers. After the employer has received the physician's statement, the employer is required to make this information available to the affected employee.

The purpose in requiring the examining physician to supply the employer with a written opinion is to provide the employer with a medical basis to assist the employer in placing employees initially, in determining that their health is, or is not, being impaired by glycol ethers, and to assess the employee's ability to use protective clothing and equipment.

Appendix D to § 1910.1031 (Nonmandatory)—Reproductive History Questionnaire

(Adapted From Appendix B, Office of Technology Assessment Report, Reproductive Health Hazards in the Workplace, Ex. 5-135).

Reproductive History

1. Have there been any pregnancies with your present mate? Yes ____No ____
   If so, when did they occur? _____
2. Have there been any miscarriages, ectopic pregnancies or stillbirths with your present mate? Yes ____No ____
   If so, when did they occur? _____
3. Have you ever had or fathered a child that resulted in any of the following?
   If so, please specify whether it was with your present or a previous mate:
   ____Low birth weight baby (less than 5½ lbs.)
   ____Baby born more than 2 weeks early?
   ____Twins, triplets, etc.
   ____Baby with a birth defect:
   ____Cleft palate
   ____Harelip
   ____Limb deformity
   ____Disease or deformity of the heart, lungs, kidney, genitals, urinary tract, gastrointestinal tract, nervous system

___Malformations of the skull, spine
___Musculoskeletal disorders (e.g., muscular dystrophy)

4 Have you given birth to or fathered children who have any of the following conditions?
Please specify whether these children were born to you with your present or a previous mate.
___Allergy
___Asthma
___Epilepsy
___Downs syndrome
___Cystic fibrosis
___Hemophilia
___Cerebral palsy
___Mental retardation or learning problem
___Leukemia
___Tumor or Cancer
___Tay-Sachs
___Other (specify)

5. Have you and your present or any previous mate had difficulty conceiving? Yes ___ No ___
(Unprotected intercourse for a year or more with no pregnancy)

6. How long have you been trying for a pregnancy with your present mate? _____

7. Have you or your mate ever attended an infertility clinic or had previous treatment for infertility? Yes ___ No ___
If so, please give name of the doctor and the facility: _____

8. Is there any history of fertility problems in your family? Yes ___No ___
(Difficulty conceiving, miscarriage, stillbirth, deformed offspring)
Parents? _____
Brothers/Sisters? _____
Uncles/Aunts? _____

9. How many times per week do you have sexual intercourse with your present mate? _____

10. Do you and your mate use or have you used any of the following types of contraception?
Oral contraceptive pill ___
Permanent sterilization ___
Diaphragm ___
Condom ___
Spermicidal foam or gel ___
IUD ___
Other _____
Tubal ligation ___
Vasectomy ___
Coitus interruptus ___

11. What form of contraception, if any, are you currently using?

12. Do you try to have intercourse during the fertile time of the month? Yes ___ No ___
If so, how do you decide the best time? _____

13. Do you have any physical difficulties with sex that would prevent a conception? Yes ___No ___
(E.g., pain during intercourse sufficient to prevent penetration)

14. Do you use lubricants during sexual intercourse? Yes___No___

15. Have you and your present mate ever had a post coital test (examination of the cervix for sperm after intercourse)? Yes___No___
If so, was any incompatibility noted? Yes_____No_____

Reproductive Health

A. Male

1. Have you ever had any injury or operation to the penis or testicles?
Circumcision Yes___No___
Other operations on penis Yes___No___ explain _____
Varicocele operation (varicose veins near testicles) Yes___No___
Vasectomy Yes___No___
Biopsy of the testicle Yes___No___
Other operations of injuries to the testicles Yes___No___

2. Have you ever had an infection of the:
Bladder Yes___No___
Urethra Yes___No___
Epididymis Yes___No___
Kidney Yes___No___
If so, please give details: _____

3. Has there been any recent change in the size of your testicles? If so, please give details: Yes___No___

4. Have you ever had a hernia operation (even as a baby)? Yes___No___
If so, please give details: _____

5. Are you in the habit of taking very hot baths? Yes___No___

6. Are you in the habit of taking saunas? Yes___No___

7. What sort of underwear do you normally wear?
___Boxer trunks
___Jockey shorts
___Other

8. Have you ever been told by a doctor that you had a prostate problem? Yes___ No___

9. Have you ever gone through a period of several months when you had trouble getting or keeping an erection? Yes___ No___

10. Do you get satisfactory ejaculation of sperm during intercourse? Yes___ No___

11. Have you ever gone through a period of several months when you had little interest in sex? Yes___No___
If so, please give details: _____

12. Do you have any problems urinating? Yes___No___

13. Have you ever been examined by a urologist? Yes___No___
If so when? _____
For what reason? _____
Were any problems identified? _____

14. Have you had genital herpes? Yes___ No___

15. Have you had sexually transmitted disease? Yes___No___

16. Has your semen been evaluated before? Yes___No___
How many times? _____
When most recently? _____
What were the results? _____
Have any other tests (e.g. antibody, mucous penetration) been done with your semen? Yes___No___
If so, when? _____
What were the results? _____

17. Have any endocrine (hormone) studies been done with your blood? Yes___ No___
If so, when? _____
What were the results? _____

18. Have you ever had a fertility investigation? Yes___No___
If so, what was the diagnosis?
___Anatomical defect
___Hormonal/Glandular disorder
___Other
___No abnormality found

19. Have you ever had surgery for infertility? Yes___No___
If so, give details: _____

B. Female

Menstrual History

1. How old were you when you began to menstruate?_____

2. Are your periods regular? Yes ___No___

3. What is the average length of your cycle?_____

4. Give the date of the 1st day of your last period:_____

5. Give the date of the 1st day of the period before last:_____

6. For how many days do you bleed?_____

7. If you experience any of these symptoms, note how many days before onset of bleeding the symptom begins:
Premenstrual:
Abdominal Bloating _____
Swelling of face, hands or feet_____
Irritability_____
Weight Gain_____
Bowel Changes_____
Urinary Tract Symptoms_____
Headache_____
Breast Tenderness_____
Other_____
During Period:
Cramps_____
Nausea_____
Diarrhea_____
Chills_____
Headaches_____
Fainting_____
Dizziness_____
Hot Flashes_____
Fever_____
Sweats_____
Constipation_____
Rectal Pain_____
Other_____

8. Do you have any bleeding or bloody discharge:
Between Periods Yes___No___
After Intercourse Yes___No___
After Douching Yes___No___

Gynecologic History:

1. Do you have any pain or discomfort associated with intercourse? Yes___ No___

2. Do you have any problems or difficulty related to sexual activity? Yes___ No___

3. Have you ever gone through a period of several months when you had little interest in sex? Yes___No___
If so, give details:___

4. Have you had genital herpes? Yes___ No___

5. Have you had sexually transmitted disease? Yes___No___

6. Have you ever had an abnormal Pap smear? Yes___No___

7. Have you had or do you have recurrent vaginal infection? Yes___No___

8. Have you had or do you have problems with vaginal discharge? Yes____No____
9. Did your mother take Diethylstilbestrol (DES) while pregnant with you? Yes____ No____
10. Have you had any type of pelvic infection, disease, abnormality or surgery of the:
   Vulva ____
   Uterus____
   Urinary Tract____
   Vagina____
   Tubes____
   Urinary Tract____
   Cervix____
   Ovaries____
   Rectum____
   Anus____
11. Have you ever had endometriosis? Yes____No____
   If so, when?____
   How was it treated?____
12. Do you know whether or not your fallopian tubes are open? Yes____ No____
13. Has either tube been removed? Yes____ No____
14. Have you ever had a hysterosalpingogram (Tubal dye study)? Yes____No____
   If so, when?____
   What were the results?____
15. Have you ever had a laparoscopy? Yes____No____
   If so, when____
   What were the results?____
16. Have any endocrine (hormone) studies been done with your blood? Yes____ No____
   If so, when?____
   What were the results?____
17. Have you ever had a fertility investigation? Yes____No____
   If so, what was the diagnosis?
   ____Anatomical defect
   ____Hormonal/Glandular disorder
   ____Other
   ____No abnormality found
18. Have you ever had surgery for infertility? Yes____No____
   If so, give details: ____

Appendix E—Sampling and Analytical Methods for 2-Methoxyethanol, 2-Ethoxyethanol, and Their Acetates

This appendix describes the method presently used at the OSHA Analytical Laboratory in Salt Lake City for measurement of 2-Methoxyethanol, 2-Ethoxyethanol and their acetates. The method is the most sensitive method presently available for measurement of employee exposure. Inclusion of this method in the appendix does not imply that it is the only one which will be satisfactory. Other methods may also be acceptable provided they can determine these glycol ethers at the permissible exposure limit within ±25% of the "true" value at the 95% confidence level. Where applicable, the method must also be able to measure glycol ethers at the action level to ±35% of the "true" value with 95% confidence.

The following is extracted from the OSHA Analytical Laboratory Method No. 79. For a more complete copy of the method see Exhibit 5–139.

Method number: 79
Matrix: Air
Procedure: Samples are collected by drawing air through standard size coconut shell charcoal tubes. Samples are desorbed with 95/5 (v/) methylene chloride/methonal and analyzed by gas chromatography using a flame ionization detector.
Recommended air volume and sampling rate: 48 L at 0.1 L/min for TWA samples; 15 L at 1.0 L/min for STEL samples.

	2ME	2MEA	2EE	2EEA
Target conc.: ppm (mg/m³)	0.1 (0.3)	0.1 (0.5)	0.5 (1.8)	0.5 (2.7)
Reliable quantitation limit: ppb (µg/m³)	6.7 (21)	1.7 (8.4)	2.1 (7.8)	1.2 (6.5)
Standard error of estimate at the target concentration: (Section 4.7) percent	6.0	5.7	6.2	5.7

Special requirements: As indicated in OSHA Method 53 (Ref. 5.1), samples for 2MEA and 2EEA should be refrigerated upon receipt by the laboratory to minimize hydrolysis.

Status of method: Evaluated method. This method has been subjected to the established evaluation procedures of the Organic Methods Evaluation Branch.

1. General Discussion

1.1. Background

1.1.1. History. An air sampling and analytical procedure for 2ME, 2MEA, 2EE, and 2EEA (OSHA Method 53) was previously evaluated by the Organic Methods Evaluation Branch of the OSHA Analytical Laboratory. (Ref. 5.1.) The target concentration for all four analytes in that method was 5 ppm. OSHA is now in the process of 6(b) rulemaking to consider reducing occupational exposure to these glycol ethers. Because the proposed exposure limits may be significantly lower than the target concentrations in Method 53, the methodology was re-evaluated at lower levels.

A number of changes were made to Method 53 to accommodate the lower target concentrations.

(1) The recommended air volume for TWA samples was increased from 10 L to 48 L. This allows for lower detection limits and increases the TWA sampling time to a more convenient 480 min (8 h) when sampling at 0.1 L/min.

(2) A capillary GC column was substituted for a packed column to attain higher resolution. This was especially helpful in achieving better separation of 2ME and methylene chloride, a major component of the desorption solvent.

(3) It was found that the desorption efficiency from wet charcoal was significantly lower for 2ME, and to a lesser extent for 2EE, at these lower concentrations. This problem was overcome by adding about 125 mg of anhydrous magnesium sulfate to each desorption vial to remove the desorbed water. Because charcoal will always collect some water from sampled air, all 2ME and 2EE air samples must be treated in this manner.

Utilizing these three major modifications of Method 53, a successful evaluation was performed for these glycol ethers at the lower target concentrations. Also, a minor modification was made in the determination of desorption efficiencies. Aqueous instead of methanolic stock solutions were used to determine the desorption efficiencies for 2MEA and 2EEA. It was found that at these lower levels, when stock methanolic solutions are spiked on dry Lot 120 charcoal, part of the 2MEA and 2EEA react with the methanol to form methyl acetate and 2ME and 2EE respectively. The reaction, which is analogous to hydrolysis, is called transesterification (alcoholysis) and is catalyzed by acid or base. The surface of dry Lot 120 charcoal is basic and the reaction was verified to occur by quantitatively determining methyl acetate and the corresponding alcohol (2ME for 2MEA samples, 2EE for 2EEA samples) from spiked samples. Transesterification was not observed when methanolic stock solutions were spiked onto wet charcoal. Therefore, transesterification is not expected to occur for samples collected from workplace air containing methanol as well as 2MEA or 2EEA because workplace atmospheres are seldom completely dry.

Because of the number of modifications and the extensive amount of data generated in this evaluation, the findings are presented as a separate method instead of a revision of Method 53. This method supersedes Method 53, although Method 53 is still valid at the higher analyte concentrations. Although hydrolysis of 2MEA and 2EEA does not appear to be a problem at lower concentrations, as a precautionary measure, the special requirement that 2MEA and 2EEA samples should be refrigerated upon receipt by the laboratory was retained from Method 53.

1.1.2. Toxic effects (This section is for information only and should not be taken as the basis of OSHA policy.)

As reported in the Documentation of Threshold Limit Values (Refs. 5.2–5.5.), all four analytes were investigated by Nagano et al. (Ref. 5.6.) in terms of potency for testicular effects. They concluded that on an equimolar basis, the respective acetate esters were about as potent as 2ME and 2EE in producing testicular atrophy and leukopenia (an abnormally lower number of white blood cells) in mice. Based on this study and because 2MEA and 2EEA hydrolyze to 2ME and 2EE respectively in the body, ACGIH suggests lowering the time-weighted TLVs for all four analytes to 5 ppm.

The following is quoted from NIOSH Current Intelligence Bulletin 39. (Ref. 5.7.)

The National Institute for Occupational Safety and Health (NIOSH) recommends that 2-methoxyethanol (2ME) and 2-ethoxyethanol (2EE) be regarded in the workplace as having the potential to cause adverse reproductive effects in male and female workers. These recommendations are based on the results of several recent studies that have demonstrated dose-related

embryotoxicity and other reproductive effects in several species of animals exposed by different routes of administration. Of particular concern are those studies in which exposure of pregnant animals to concentrations of 2ME or 2EE at or below their respective Occupational Safety and Health Administration (OSHA) Permissible Exposure Limits (PELs) led to increased incidences of embryonic death, teratogenesis, or growth retardation. Exposure of male animals resulted in testicular atrophy and sterility.

In each case the animals had been exposed to 2ME or 2EE at concentrations at or below their respective OSHA PELs. Therefore, appropriate controls should be instituted to minimize worker exposure to both compounds.

On May 20, 1986, EPA referred these four analytes to OSHA in accordance with the Toxic Substances Control Act (TSCA). On April 2, 1987, OSHA issued an Advanced Notice of Proposed Rulemaking (ANPR) which summarized the information currently available to OSHA concerning the uses, health effects, estimates of employee exposure and risk determinations for these glycol ethers. OSHA invited comments from interested parties and based on the gathered information will decide on appropriate action. (Ref. 5.8.)

1.1.3. Workplace exposure. 2ME- It is used as a solvent for many purposes: cellulose esters, dyes, resins, lacquers, varnishes, and stains; and as a perfume fixative and jet fuel deicing additive. (Ref. 5.2.)

2MEA- It is used in photographic films, lacquers, textile printing, and as a solvent for waxes, oils, various gums and resins, cellulose acetate, and nitrocellulose. (Ref. 5.3.)

2EE- It is used as a solvent for nitrocellulose, natural and synthetic resins, and as a mutual solvent for the formulation of soluble oils. It is also used in lacquers, in the dyeing and printing of textiles, in varnish removers, cleaning solutions, in products for the treatment of leather, and as an anti-icing additive for aviation fuels. (Ref. 5.4.)

2EEA- It is used as a blush retardant in lacquers; as a solvent for nitrocellulose, oils and resins; in wood stains, varnish removers, and in products for the treatment of textiles and leathers. (Ref. 5.5.)

1.1.4. Physical properties (Refs. 5.2.–5.5.) chemical formulae: 2ME- $CH_3OCH_2CH_2OH$; 2MEA- $CH_3OCH_2CH_2OOCCH_3$; 2EE- $CH_3CH_2OCH_2CH_2OH$; 2EEA- $CH_3CH_2OCH_2CH_2OOCCH_3$ synonyms: (Ref. 5.9.).

2ME- methyl Cellosolve®; glycol monomethyl ether; ethylene glycol monomethyl ether; methyl oxitol; Ektasolve; Jeffersol EM.

2MEA- methyl Cellosolve® acetate; glycol monomethyl ether acetate; ethylene glycol monomethyl ether acetate.

2EE- Cellosolve® solvent; ethylene glycol monoethyl ether.

2EEA- Cellosolve® acetate; glycol monoethyl ether acetate; ethylene glycol monoethyl ether acetate.

	2ME	2MEA	2EE	2EEA
CAS number	109–86–4	110–49–6	110–80–5	11–15–9
Molecular weight	76.09	118.13	90.11	132.16
Boiling point	124.5°C	145°C	135.6°C	156.4°C
Color	colorless	colorless	colorless	colorless
Specific gravity	0.9663f	1.005	0.931	0.975
Vapor pressure at 20°C	0.8 kPa	0.3 kPa	0.49 kPa	0.3 kPa
Flash point, closed cup	43°C	49°C	40°C	49°C
Odor (ref. 5.9)	mild, nonresidual	mild, ether-like	sweetish	mild nonresidual
Explosive limits (ref. 5.9):				
Lower	2.5%	1.1%	1.8%	1.7%
Upper	19.8%	8.2%	14%	?

The analyte air concentrations throughout this method are based on the recommended TWA-sampling and analytical parameters. Air concentrations listed in the ppm and ppb are referenced to 25 °C and 101.3 kPa (760 mm Hg.)

1.2. Limit defining parameters

1.2.1. Detection limit of the analytical procedure. The detection limits of the analytical procedure are 0.10, 0.04, 0.04, and 0.03 ng per injection (1.0-µL injection with a 10:1 split) for 2ME, 2MEA, 2EE, and 2EEA respectively. These are the amounts of each analyte that will give peaks with heights approximately 5 times the height of baseline noise. (Section 4.1.)

1.2.2. Detection limit of the overall procedure. The detection limits of the overall procedure are 1.0, 0.40, 0.37, and 0.31 µg per sample for 2ME, 2MEA, 2EE, and 2EEA respectively. These are the amounts of each analyte spiked on the sampling device that allow recovery of amounts of each analyte equivalent to the detection limits of the analytical procedure. These detection limits correspond to air concentrations of 6.7 ppb (21 $\mu g/m^3$), 1.7 ppb (8.4 $\mu g/m^3$), 2.1 ppb (7.8 $\mu g/m^3$), and 1.2 ppb (6.5 $\mu g/m^3$) for 2ME, 2MEA, 2EE, and 2EEA respectively. (Section 4.2.)

1.2.3. Reliable quantitation limit. The reliable quantitation limits are the same as the detection limits of the overall procedure because the desorption efficiencies are essentially 100% at these levels. These are the smallest amounts of each analyte that can be quantitated within the requirements of recoveries of at least 75% and precisions (±1.96 SD) of ±25% or better. (Section 4.3.)

The reliable quantitation limits and detection limits reported in the method are based upon optimization of the GC for the smallest possible amounts of each analyte. When the target concentration of an analyte is exceptionally higher than these limits, they may not be attainable at the routine operating parameters.

1.2.4. Instrument response to the analyte. The instrument response over the concentration ranges of 0.5 to 2 times the target concentrations is linear for all four analytes. (Section 4.4.)

1.2.5. Recovery. The recovery of 2ME, 2MEA, 2EE, and 2EEA from samples used in a 15-day storage test remained above 84, 87, 84, and 85% respectively when the samples were stored at ambient temperatures. The recovery of analyte from the collection medium after storage must be 75% or greater. (Section 4.5, from regression lines shown in Figures 4.5.1.2., 4.5.2.2., 4.5.3.2 and 4.5.4.2.)

1.2.6. Precision (analytical procedure) The pooled coefficients of variation obtained from replicate determinations of analytical standards at 0.5, 1, and 2 times the target concentrations are 0.022, 0.004, and 0.002 for 2ME, 2MEA, 2EE, and 2EEA respectively. (Section 4.6.)

1.2.7. Precision (overall procedure). The precisions at the 95% confidence level for the ambient temperature 15-day storage tests are ±11.7, ±11.1, ±12.3, and ±11.2% for 2ME, 2MEA, 2EE, and 2EEA respectively. These include an additional ±5% for sampling error. The overall procedure must provide results at the target concentration that are ±25% or better at the 95% confidence level. (Section 4.7.)

1.2.8. Reproducibility. Six samples for each analyte collected from controlled test atmospheres and a draft copy of this procedure were given to a chemist unassociated with this evaluation. The samples were analyzed after 12 days of refrigerated storage. No individual sample result deviated from its theoretical value by more than the precision reported in Section 1.2.7. (Section 4.8.)

1.3. Advantages

1.3.1. Charcoal tubes provide a convenient method for sampling.

1.3.2. The analysis is rapid, sensitive, and precise.

1.4. Disadvantage

It may not be possible to analyze co-collected solvents using this method. Most of the other common solvents which are collected on charcoal are analyzed after desorption with carbon disulfide.

2. Sampling Procedure.

2.1. Apparatus

2.1.1. Samples are collected using a personal sampling pump calibrated to within ±5% of the recommended flow rate with a sampling tube in line.

2.1.2. Samples are collected with solid sorbent sampling tubes containing coconut shell charcoal. Each tube consists of two sections of charcoal separated by a urethane foam plug. The front section contains 100 mg of charcoal and the back section, 50 mg. The sections are held in place with glass wool plugs in a glass tube 4-mm i.d. × 70-mm length. For this evaluation, SKC Inc. charcoal tubes (catalog number 226–01, Lot 120) were used.

2.2 Reagents

None required

2.3. Technique

2.3.1. Immediately before sampling, break off the ends of the carcoal tube. All tubes should be from the same lot.

2.3.2. Connect the sampling tube to the sampling pump with flexible tubing. Position the tube so that sampled air first passes through the 100-mg section.

2.3.3. Air being sampled should not pass through any hose or tubing before entering the sampling tube.

2.3.4. Place the sampling tube vertically (to avoid channeling) in the employee's breathing zone.

2.3.5. After sampling, seal the tubes immediately with plastic caps and wrap lengthwise with OSHA Form 21.

2.3.6. Submit at least one blank sampling tube with each sample set. Blanks should be handled in the same manner as samples, except no air is drawn through them.

2.3.7. Record sample volumes (in liters of air) for each sample, along with any potential interferences.

2.3.8. Ship any bulk sample(s) in a container separate from the air samples.

2.4. Sampler capacity

2.4.1. Sampler capacity is determined by measuring how much air can be sampled before breakthrough of analyte occurs, i.e., the sampler capacity is exceeded. Individual breakthrough studies were performed on each of the four analytes by monitoring the effluent from sampling tubes containing only the 100-mg section of charcoal while sampling at 0.2 L/min from atmospheres containing 10 ppm analyte. The atmospheres were at approximately 80% relative humidity and 20–25°C. No breakthrough was detected in any of the studies after sampling for at least 6 h (>70 L). (This data was collected in the evaluation of OSHA Method 53, Ref. 5.1.)

2.4.2. A similar study as in 2.4.1. was done while sampling an atmosphere containing 10 ppm of all four analytes. The atmosphere was sampled for more than 5 h (>60 L) with no breakthrough detected. (This data was collected in the evaluation of OSHA Method 53, Ref. 5.1.)

2.5. Desorption efficiency

2.5.1. The average desorption efficiencies of 2ME, 2MEA, 2EE, and 2EEA from Lot 120 charcoal are 95.8, 97.9, 96.5, and 98.3% respectively over the range of 0.5 to 2 times the target concentrations. Desorption samples for 2MEA and 2EEA must not be determined by using methanolic stock solutions since a transesterification reaction can occur. (Section 4.9.)

2.5.2. Desorbed samples remain stable for at least 24 h. (Section 4.10.)

2.6. Recommended air volume and sampling rate

2.6.1. For TWA samples, the recommended air volume is 48 L collected at 0.1 L/min (8-h samples).

2.2.6.2. For short-term samples, the recommended air volume is 15 L collected at 1.0 L/min (15-min samples).

2.6.3. When short-term samples are required, the reliable quantitation limits become larger. For example, the reliable quantitation limit is 21 ppb (67 μg/m³) for 2ME when 15 L is sampled.

2.7. Interferences (sampling)

2.7.1. It is not known if any compound(s) will severely interfere with the collection of any of the four analytes on charcoal. In general, the presence of other contaminant vapors in the air will reduce the capacity of charcoal to collect the analytes.

2.7.2. Suspected interferences should be reported to the laboratory with submitted samples.

2.8. Safety precautions (sampling)

2.8.1. Attach the sampling equipment to the employee so that it will not interfere with work performance or safety.

2.8.2. Wear eye protection when breaking the ends of the charcoal tubes.

2.8.3. Follow all safety procedures that apply to the work area being sampled.

3. Analytical Procedure

3.1. Apparatus

3.1.1. A GC equipped with a flame ionization detector. For this evaluation, a Hewlett-Packard 5890 Series II Gas Chromatograph equipped with a 7673A Automatic Sampler was used.

3.1.2. A GC column capable of separating the analyte of interest from the desorption solvent, internal standard and any interferences. A thick film, 60-m×0.32-mm i.d., fused silicia RT_x-Volatiles Column (Cat. nol. 10904, Restek Corp., Bellefonte, PA) was used in this evaluation.

3.1.3. An electronic integrator or some other suitable means of measuring peak areas or heights. A Hewlett-Packard 18652A A/D converter interfaced to a Hewlett-Packard 3357 Lab Automation Data System was used in this evaluation.

3.1.4. Two-milliliter vials with Teflon-lined caps.

3.1.5. A dispenser capable of delivering 1.0 mL to prepare standards and samples. If a dispenser is not available, a 1.0-mL volumetric pipet may be used.

3.1.6. Syringes of various sizes for preparation of standards.

3.1.7. Volumetric flasks and pipets to dilute the pure analytes in preparation of standards.

3.2. Reagents

3.2.1. 2-Methoxyethanol, 2-methoxyethyl acetate, 2-ethoxyethanol, and 2-ethoxyethyl acetate, reagent grade. Aldrich Lot HB062777 2ME, Eastman Lot 701–2 2MEA, Aldrich Lot DB040177 2EE, and Aldrich Lot 04916HP 2EEA were used in this evaluation.

3.2.2. Anhydrous magnesium sulfate, reagent grade. Chempure Lot M172 KDHM was used in this evaluation.

3.2.3. Methylene chloride, chromatographic grade. American Burdick and Jackson Lot AQ098 was used in this evaluation.

3.2.4. Methanol, chromatographic grade. American Burdick and Jackson Lot AT015 was used in this evaluation.

3.2.5. A suitable internal standard, reagent grade. "Quant Grade" 3-methyl-3-pentanol from Polyscience Corporation was used in this evaluation.

3.2.6. The desorption solvent consists of methylene chloride/methanol, 95/5 (v/v) containing an internal standard at a concentration of 20 μL/L.

3.2.7. GC grade nitrogen, air, and hydrogen.

3.3. Standard preparation

3.3.1. Prepare concentrated stock standards by diluting the pure analytes with methanol. Prepare working standards by injecting microliter amounts of concentrated stock standards into vials containing 1.0 mL of desorption solvent delivered from the same dispenser used to desorb samples. For example, to prepare a stock standard of 2ME, dilute 195 μL of pure 2ME (sp gr = 0.9663) to 50.0 mL with methanol. This stock solution would contain 3.769 μg/μL. A working standard of 15.08 μg/sample is prepared by injecting 4.0 μL of this stock into a vial containing 1.0 mL of desorption solvent.

3.3.2. Bracket sample concentrations with working standard concentrations. If samples fall outside of the concentration range of prepared standards, prepare and analyze additional standards to ascertain the linearity of response.

3.4. Sample Preparation

3.4.1. Transfer each section of the samples to separate vials. Discard the glass tubes and plugs.

3.4.2. For 2ME and 2EE samples, add about 125 mg of magnesium sulfate to each vial.

3.4.3. Add 1.0 mL of desorption solvent to each vial using the same dispenser as used for preparation of standards.

3.4.4. Immediately cap the vials and shake them periodically for about 30 min.

3.5. Analysis

3.5.1. GC conditions:

Zone temperatures: column-80°C for 4 min; 10°C/min to 125°C; 125°C for 4 min; injector-150°C; detector-200°C.

Gas flows: hydrogen (carrier)-2.5 mL/min (80 kPa head pressure); nitrogen (makeup)-20 mL/min; hydrogen (flame)-65 mL/min; air-400 mL/min.

Injection volume: 1.0 μL (with a 10:1 split).

Column: 60-m×0.32-mm i.d. fused silica, RT_x-Volatiles, thick film.

Retention times: 2ME-5.0 min; 2MEA-10.0 min; 2EE- 6.7 min; 2EEA- 11.9 min; (3-methyl-3-pentanol- 7.5 min).

3.5.2. Peak areas (or heights) are measured by an integrator or other suitable means.

3.5.3. An internal standard (ISTD) calibration method is used. Calibration

curves are prepared by plotting micrograms of analyte per sample versus ISTD-corrected response of standard injections. Sample concentrations must be bracketed by standards

3.6. Interferences (analytical)

3.6.1. Any compound that responds on a flame ionization detector and has the same general retention time of the analyte or internal standard is a potential interference. Possible interferences should be reported to the laboratory with submitted samples by the industrial hygienist. These interferences should be considered before samples are desorbed.

3.6.2. GC parameters (i.e. column and column temperature) may be changed to possibly circumvent interferences.

3.6.3. Retention time on a single column is not considered proof of chemical identity. Analyte identity should be confirmed by GC/mass spectrometer if possible.

3.7. Calculations

The analyte concentration for samples is obtained from the appropriate calibration curve in terms of micrograms of analyte per sample, uncorrected for desorption efficiency. The air concentration is calculated using the following formulae. The back (50-mg) section is analyzed primarily to determine if there was any breakthrough from the front (100-mg) section during sampling. If a significant amount of analyte is found on the back section (e.g., greater than 25% of the amount found on the front section), this fact should be reported with sample results. If any analyte is found on the back section, it is added to the amount found on the front section. This total amount is then corrected by subtracting the total amount (if any) found on the blank.

$$mg/m^3 = \frac{(\mu g \text{ of analyte per sample})}{(\text{L of air sampled})(\text{desorption efficiency})}$$

where desorption efficiency= 0.958 for 2ME; 0.979 for 2MEA; 0.965 for 2EE; 0.983 for 2EEA.

ppm = (mg/m^3) (24.46)/(molecular weight of analyte) where 24.46 is the molar volume at 25 °C and 101.3 kPa (760 mmHg) and molecular weights =76.09 for 2ME, 118.13 for 2MEA 90.11 for 2EE, 132.16 for 2EEA

3.8 Safety precautions (analytical)

3.8.1. Avoid skin contact and inhalation of all chemicals.

3.8.2. Restrict the use of all chemicals to a fume hood when possible.

3.8.3. Wear safety glasses and a lab coat at all times while in the lab area.

4. Backup Data

(For backup data see Section 4 of OSHA Analytical Method Number 79, Exhibit 5–139).

5. References

5.1. "OSHA Analytical Methods Manual" U.S. Department of Labor, Occupational Safety and Health Administration; OSHA Analytical Laboratory: Salt Lake City, UT, 1985; Method 53; American Conference of Governmental Industrial Hygienists (ACGIH): Cincinnati, OH, ISBN: 0–936712–66–X.

5.2. "American Conference of Governmental Industrial Hygienists: Documentation of the Threshold Limit Values, Supplemental Documentation for 1982", pp. 259–260, Cincinnati, OH (1982).

5.3. "American Conference of Governmental Industrial Hygienists: Documentation of the Threshold Limit Values, Supplemental Documentation for 1982", p. 260, Cincinnati, OH (1982).

5.4. "American Conference of Governmental Industrial Hygienists: Documentation of the Threshold Limit Values, Supplemental Documentation for 1982", p. 171, Cincinnati, OH (1982).

5.5. "American Conference of Governmental Industrial Hygienists: Documentation of the Threshold Limit Values, Supplemental Documentation for 1982", p. 172, Cincinnati, OH (1982).

5.6. Nagano, K.; Nakayama, E.; Koyano, M.; Oobayaski, H.; Adachi, H.; Yamada, T. *Jap. J. Ind. Health* 1979, *21*, 29–35.

5.7. "Current Intelligence Bulletin 39, Glycol Ethers"; May 2, 1983, U.S. Department of Health and Human Services, Public Health Service, Center for Disease Control, NIOSH.

5.8. *Fed. Regist.* 1987, *52* (No. 63, Thursday, April 2), 10586–10593.

5.9. "Pocket Guide to Chemical Hazards", NIOSH/OSHA, Sept. 1978, DHEW (NIOSH) Publ. No. 78–210.

Appendix F to § 1910.1031—Qualitative and Quantitative Fit Testing Procedures-Mandatory

I. Fit Test Protocols

A. The employer shall include the following provisions in the fit test procedures. These provisions apply to both qualitative fit testing (QLFT) and quantitative fit testing (QNFT).

1. The test subject shall be allowed to pick the most comfortable respirator from a selection including respirators of various sizes from different manufacturers. The selection shall include at least three sizes of elastomeric facepieces of the type of respirator that is to be tested, i.e., three sizes of half mask; or three sizes of full facepiece; and units from at least two manufacturers.

2. Prior to the selection process, the test subject shall be shown how to put on a respirator, how it should be positioned on the face, how to set strap tension and how to determine a comfortable fit. A mirror shall be available to assist the subject in evaluating the fit and positioning the respirator. This instruction may not constitute the subject's formal training on respirator use, as it is only a review.

3. The test subject shall be informed that he/she is being asked to select the respirator which provides the most comfortable fit. Each respirator represents a different size and shape, and if fitted and used properly, will provide adequate protection.

4. The test subject shall be instructed to hold each facepiece up to the face and eliminate those which obviously do not give a comfortable fit.

5. The more comfortable facepieces are noted; the most comfortable mask is donned and worn at least five minutes to assess comfort. Assistance in assessing comfort can be given by discussing the points in item 6 below. If the test subject is not familiar with using a particular respirator, the test subject shall be directed to don the mask several times and to adjust the straps each time to become adept at setting proper tension on the straps.

6. Assessment of comfort shall include reviewing the following points with the test subject and allowing the test subject adequate time to determine the comfort of the respirator:

(a) Position of the mask on the nose

(b) Room for eye protection

(c) Room to talk

(d) Position of mask on face and cheeks

7. The following criteria shall be used to help determine the adequacy of the respirator fit:

(a) Chin properly placed;

(b) Adequate strap tension, not overly tightened;

(c) Fit across nose bridge;

(d) Respirator of proper size to span distance from nose to chin;

(e) Tendency of respirator to slip;

(f) Self-observation in mirror to evaluate fit and respirator position.

8. The test subject shall conduct the negative and positive pressure fit checks as described below or ANSI Z88.2–1980. Before conducting the negative or positive pressure test, the subject shall be told to seat the mask on the face by moving the head from side-to-side and up and down slowly while taking in a few slow deep breaths. Another facepiece shall be selected and retested if the test subject fails the fit check tests.

(a). Positive pressure test. Close off the exhalation valve and exhale gently onto the facepiece. The face fit is considered satisfactory if a slight positive pressure can be built up inside the facepiece without any evidence of outward leakage of air at the seal. For most respirators this method of leak testing requires the wearer to first remove the exhalation valve cover before closing off the exhalation valve and then carefully replacing it after the test.

(b). Negative pressure test. Close off the inlet opening of the canister or cartridge(s) by covering with the palm of the hand(s) or by replacing the filter seal(s), inhale gently so that the facepiece collapses slightly, and hold the breath for ten seconds. If the facepiece remains in its slightly collapsed condition and no inward leakage of air is detected, the tightness of the respirator is considered satisfactory.

9. The test shall not be conducted if there is any hair growth between the skin and the facepiece sealing surface, such as stubble beard growth, beard, or long sideburns which cross the respirator sealing surface. Any type of apparel which interferes with a satisfactory fit shall be altered or removed.

10. If a test subject exhibits difficulty in breathing during the tests, she or he shall be referred to a physician trained in respiratory disease or pulmonary medicine to determine whether the test subject can wear a respirator while performing her or his duties.

11. The test subject shall be given the opportunity to wear the successfully fitted

respirator for a period of two weeks. If at any time during this period the respirator becomes uncomfortable, the test subject shall be given the opportunity to select a different facepiece an to be retested.

12. The employer shall certify that a successful fit test has been administered to the employee. The certification shall include the following information:

(a) Name of employee;

(b) Type, brand and size of respirator; and

(c) Date of test;

(e) Where QNFT is used, the fit factor, strip chart, or other recording of the results of the test, shall be retained with the certification. The certification shall be maintained until the next fit test is administered.

13. Exercise regimen. Prior to the commencement of the fit test, the test subject shall be given a description of the fit test and the test subject's responsibilities during the test procedure. The description of the process shall include a description of the test exercises that the subject will be performing. The respirator to be tested shall be worn for at least 5 minutes before the start of the fit test.

14. Test Exercises. The test subject shall perform exercises, in the test environment, in the manner described below:

(a) Normal breathing. In a normal standing position, without talking, the subject shall breathe normally.

(b) Deep breathing. In a normal standing position, the subject shall breathe slowly and deeply, taking caution so as to not hyperventilate.

(C) Turning head side to side. Standing in place, the subject shall slowly turn his/her head from side to side between the extreme positions on each side. The head shall be held at each extreme momentarily so the subject can inhale at each side.

(d) Moving head up and down. Standing in place, the subject shall slowly move his/her head up and down. The subject shall be instructed to inhale in the up position (i.e., when looking toward the ceiling).

(e) Talking. The subject shall talk out loud slowly and loud enough so as to be heard clearly by the test conductor. The subject can read from a prepared text such as the Rainbow Passage, count backward from 100, or recite a memorized poem or song.

(f) Grimace. The test subject shall grimace by smiling or frowning.

(g) Bending over. The test subject shall bend at the waist as if he/she were to touch his/her toes. Jogging in place shall be substituted for this exercise in those test environments such as shroud type QNFT units which prohibit bending at the waist.

(h) Normal breathing. Same as exercise 1.

Each test exercise shall be performed for one minute except for the grimace exercise which shall be performed for 15 seconds.

The test subject shall be questioned by the test conductor regarding the comfort of the respirator upon completion of the protocol. If it has become uncomfortable, another model of respirator shall be tried.

B. Qualitative Fit Test (QLFT) Protocols

1. General

(a) The employer shall assign specific individuals who shall assume full responsibility for implementing the respirator qualitative fit test program.

(b) The employer shall ensure that persons administering QLFT are able to prepare test solutions, calibrate equipment and perform tests properly, recognize invalid tests, and assure that test equipment is in proper working order.

(c) The employer shall assure that QLFT equipment is kept clean and well maintained so as to operate at the parameters for which it was designed.

2. Isoamyl Acetate Protocol

(a) *Odor threshold screening.* The odor threshold screening test, performed without wearing a respirator, is intended to determine if the individual tested can detect the odor of isoamyl acetate.

(1) Three 1-liter glass jars with metal lids are required.

(2) Odor free water (e.g. distilled or spring water) at approximately 25 degrees C shall be used for the solutions.

(3) The isoamyl acetate (IAA) (also known at isopentyl acetate) stock solution is prepared by adding 1 cc of pure IAA at 800 cc of odor free water in a 1 liter jar and shaking for 30 seconds. A new solution shall be prepared at least weekly.

(4) The screening test shall be conducted in a room separate from the room used for actual fit testing. The two rooms shall be well ventilated but shall not be connected to the same recirculating ventilation system.

(5) The odor test solution is prepared in a second jar by placing 0.4 cc of the stock solution into 500 cc of odor free water using a clean dropper or pipette. The solution shall be shaken for 30 seconds and allowed to stand for two to three minutes so that the IAA concentration above the liquid may reach equilibrium. This solution shall be used for only one day.

(6) A test blank shall be prepared in a third jar by adding 500 cc of odor free water.

(7) The odor test and test blank jars shall be labeled 1 and 2 for jar identification. Labels shall be placed on the lids so they can be periodically peeled, dried off and switched to maintain the integrity of the test.

(8) The following instruction shall be typed on a card and placed on the table in front of the two test jars (i.e., 1 and 2): "The purpose of this test is to determine if you can smell banana oil at a low concentration. The two bottles in front of you contain water. One of these bottles also contains a small amount of banana oil. Be sure the covers are on tight, then shake each bottle for two seconds. Unscrew the lid of each bottle, one at a time, and sniff at the mouth of the bottle. Indicate to the test conductor which bottle contains banana oil."

(9) The mixtures used in the IAA order detection test shall be prepared in an area separate from where the test is preformed, in order to prevent olfactory fatigue in the subject.

(10) If the test subject is unable to correctly identify the jar containing the odor test solution, the IAA qualitative fit test shall not be performed.

(11) If the test subject correctly identifies the jar containing the odor test solution, the test subject may proceed to respirator selection and fit testing.

(b) *Isoamyl acetate fit test*

(1) The fit test chamber shall be similar to a clear 55-gallon drum liner suspended inverted over a 2-foot diameter frame so that the top of the chamber is about 6 inches above the test subject's head. The inside top center of the chamber shall have a small hook attached.

(2) Each respirator used for the fitting and fit testing shall be equipped with organic vapor cartridges or offer protection against organic vapors. The cartridges or masks shall be changed at least weekly.

(3) After selecting, donning, and properly adjusting a respirator, the test subject shall wear it to the fit testing room. This room shall be separate from the room used for odor threshold screening and respirator selection, and shall be well ventilated, as by an exhaust fan or lab hood, to prevent general room contamination.

(4) A copy of the test exercises and any prepared text from which the subject is to read shall be taped to the inside of the test chamber.

(5) Upon entering the test chamber, the test subject shall be given a 6-inch by 5-inch piece of paper towel, or other porous, absorbent, single-ply material, folded in half and wetted with 0.75 cc of pure IAA. The test subject shall hang the wet towel on the hook at the top of the chamber.

(6) Allow two minutes for the IAA test concentration to stabilize before starting the fit test exercises. This would be an appropriate time to talk with the test subject; to explain the fit test, the importance of his/her cooperation, and the purpose for the head exercises; or to demonstrate some of the exercises.

(7) If at any time during the test, the subject detects the banana like odor of IAA, the test has failed. The subject shall quickly exit from the test chamber and leave the test area to avoid olfactory fatigue.

(8) If the test has failed, the subject shall return to the selection room and remove the respirator, repeat the odor sensitivity test, select and put on another respirator, return to the test chamber and again begin the procedure described in (1) through (7) above. The process continues until a respirator that fits well has been found. Should the odor sensitivity test be failed, the subject shall wait about 5 minutes before retesting. Odor sensitivity will usually have returned by this time.

(9) When a respirator is found that passes the test, its efficiency shall be demonstrated for the subject by having the subject break the face seal and take a breath before exiting the chamber.

(10) When the test subject leaves the chamber, the subject shall remove the saturated towel and return it to the person conducting the test. To keep the test area from becoming contaminated, the used towels shall be kept in a self sealing bag so there is no significant IAA concentration build-up in the test chamber during subsequent tests.

3. Saccharin Solution Aerosol Protocol

The saccharin solution aerosol QLFT protocol is the only currently available, validated test protocol for use with

particulate disposable dust respirators not equipped with high-efficiency filters. The entire screening and testing procedure shall be explained to the test subject prior to the conduct of the screening test.

(a) *Taste threshold screening.* The saccharin taste threshold screening, performed without wearing a respirator, is intended to determine whether the individual being tested can detect the taste of saccharin.

(1) Threshold screening as well as fit testing subjects shall wear an enclosure about the head and shoulders that is approximately 12 inches in diameter by 14 inches tall with at least the front portion clear and that allows free movements of the head when a respirator is worn. An enclosure substantially similar to the 3M hood assembly, parts #FT14 and #FT15 combined, is adequate.

(2) The test enclosure shall have a ¾-inch hole in front of the test subject's nose and mouth area to accommodate the nebulizer nozzle.

(3) The test subject shall don the test enclosure. Throughout the threshold screening test, the test subject shall breathe through his/her wide open mouth with tongue extended.

(4) Using a DeVilbiss Model 40 Inhalation Medication Nebulizer the test conductor shall spray the threshold check solution into the enclosure. This nebulizer shall be clearly marked to distinguish it from the fit test solution nebulizer.

(5) The threshold check solution consists of 0.83 grams of sodium saccharin USP in 1 cc of warm water. It can be prepared by putting 1 cc of the fit test solution (see (b)(5) below) in 100 cc of distilled water.

(6) To produce the aerosol, the nebulizer bulb is firmly squeezed so that it collapses completely, then released and allowed to fully expand.

(7) Ten squeezes are repeated rapidly and then the test subject is asked whether the saccharin can be tested.

(8) If the first response is negative, ten more squeezes are repeated rapidly and the test subject is again asked whether the saccharin is tasted.

(9) If the second response is negative, ten more squeezes are repeated rapidly and the test subject is again asked whether the saccharin is tasted.

(10) The test conductor will take note of the number of squeezes required to solicit a taste response.

(11) If the saccharin is not tasted after 30 squeezes (step 10), the test subject may not perform the saccharin fit test.

(12) If a taste response is elicited, the test subject shall be asked to take note of the taste for reference in the fit test.

(13) Correct use of the nebulizer means that approximately 1 cc of liquid is used at a time in the nebulizer body.

(14) The nebulizer shall be thoroughly rinsed in water, shaken dry, and refilled at least each morning and afternoon or at least every four hours.

(b) *Saccharin solution aerosol fit test procedure*

(1) The test subject may not eat, drink (except plain water), or chew gum for 15 minutes before the test.

(2) The fit test uses the same enclosure described in (a) above.

(3) The test subject shall don the enclosure while wearing the respirator selected in section (a) above. The respirator shall be properly adjusted and equipped with a particulate filter(s).

(4) A second DeVilbiss Model 40 Inhalation Medication Nebulizer is used to spray the fit test solution into the enclosure. This nebulizer shall be clearly marked to distinguish it from the screening test solution nebulizer.

(5) The fit test solution is prepared by adding 83 grams of sodium saccharin to 100 cc of warm water.

(6) As before, the test subject shall breathe through the open mouth with tongue extended.

(7) The nebulizer is inserted into the hole in the front of the enclosure and the fit test solution is sprayed into the enclosure using the same number of squeezes required to elicit a taste response in the screening test.

(8) After generating the aerosol the test subject shall be instructed to perform the exercises in section I. A. 14 above.

(9) Every 30 seconds the aerosol concentration shall be replenished using one-half the number of squeezes as initially.

(10) The test subject shall indicate to the test conductor if at any time during the fit test the taste of saccharin is detected.

(11) If the taste of saccharin is detected, the fit is deemed unsatisfactory and a different respirator shall be tried.

4. Irritant Fume Protocol

(a) The respirator to be tested shall be equipped with high-efficiency particulate air (HEPA) filters.

(b) The test subject shall be allowed to smell a weak concentration of the irritant smoke before the respirator is donned to become familiar with its characteristic odor.

(c) Break both ends of a ventilation smoke tube containing stannic oxychloride, such as the MSA part No. 5645, or equivalent. Attach one end of the smoke tube to a low flow air pump set to deliver 200 milliliters per minute.

(d) Advise the test subject that the smoke can be irritating to the eyes and instruct the subject to keep his/her eyes closed while the test is performed.

(e) The test conductor shall direct the stream of irritant smoke from the smoke tube towards the face seal area of the test subject. He/She shall begin at least 12 inches from the facepiece and gradually move to within one inch, moving around the whole perimeter of the mask.

(f) The exercises identified in section I. A. 14 above shall be performed by the test subject while the respirator seal is being challenged by the smoke.

(g) Each test subject passing the smoke test without evidence of a response shall be given a sensitivity check of the smoke from the same tube once the respirator has been removed to determine whether he/she reacts to the smoke. Failure to evoke a response shall void the fit test.

(h) The fit test shall be performed in a location with exhaust ventilation sufficient to prevent general contamination of the testing area by the test agent.

C. Quantitative Fit Test (QNFT) Protocol

1. General

(a) The employer shall assign specific individuals who shall assume full responsibility for implementing the respirator quantitative fit test program.

(b) The employer shall ensure that persons administering QNFT are able to calibrate equipment and perform tests properly, recognize invalid tests, calculate fit factors properly and assure that test equipment is in proper working order.

(c) The employer shall assure that QNFT equipment is kept clean and well maintained so as to operate at the parameters for which it was designed.

2. Definitions

(a) Quantitative fit test. The test is performed in a test chamber. The normal air-purifying element of the respirator is replaced by a high-efficiency particulate air (HEPA) filter in the case of particulate QNFT aerosols or a sorbent offering contaminant penetration protection equivalent to high-efficiency filters where the QNFT test agent is a gas or vapor.

(b) Challenge agent means the aerosol, gas or vapor introduced into a test chamber so that its concentration inside and outside the respirator may be measured.

(c) Test subject means the person wearing the respirator for quantitative fit testing.

(d) Normal standing position means standing erect and straight with arms down along the sides and looking straight ahead.

(e) Maximum peak penetration method means the method of determining test agent penetration in the respirator as determined by strip chart recordings of the test. The highest peak penetration for a given exercise is taken to be representative of average penetration into the respirator for that exercise.

(f) Average peak penetration method means the method of determining test agent penetration into the respirator utilizing a strip chart recorder, integrator, or computer. The agent penetration is determined by an average of the peak heights on the graph or by computer integration, for each exercise except the grimace exercise. Integrators or computers which calculate the actual test agent penetration into the respirator for each exercise will also be considered to meet the requirements of the average peak penetration method.

(g) "Fit Factor" means the ration of challenge agent concentration outside with respect to the inside of a respirator inlet covering (facepiece or enclosure).

3. Apparatus

(a) Instrumentation. Aerosol generation, dilution, and measurement systems using corn oil or sodium chloride as test aerosols shall be used for quantitative fit testing.

(b) Test chamber. The test chamber shall be large enough to permit all test subjects to perform freely all required exercises without disturbing the challenge agent concentration or the measurement apparatus. The test chamber shall be equipped and constructed so that the challenge agent is effectively isolated from the ambient air, yet uniform in concentration throughout the chamber.

(c) When testing air-purifying respirators, the normal filter or cartridge element shall be replaced with a high-efficiency particulate filter supplied by the same manufacturer.

(d) The sampling instrument shall be selected so that a strip chart record may be made of the test showing the rise and fall of the challenge agent concentration with each inspiration and expiration at fit factors of at least 2,000. Integrators or computers which integrate the amount of test agent penetration leakage into the respirator for each exercise may be used provided a record of the readings is made.

(e) The combination of substitute air-purifying elements, challenge agent and challenge agent concentration in the test chamber shall be such that the test subject is not exposed in excess of an established exposure limit for the challenge agent at any time during the testing process.

(f) The sampling port on the test specimen respirator shall be placed and constructed so that no leakage occurs around the port (e.g. where the respirator is probed), a free air flow is allowed into the sampling line at all times and so that there is no interference with the fit or performance of the respirator.

(g) The test chamber and test set up shall permit the person administering the test to observe the test subject inside the chamber during the test.

(h) The equipment generating the challenge atmosphere shall maintain the concentration of challenge agent inside the test chamber constant to within a 10 percent variation for the duration of the test.

(i) The time lag (interval between an event and the recording of the event on the strip chart or computer or integrator) shall be kept to a minimum. There shall be a clear association between the occurrence of an event inside the test chamber and its being recorded.

(j) The sampling line tubing for the test chamber atmosphere and for the respirator sampling port shall be of equal diameter and of the same material. The length of the two lines shall be equal.

(k) The exhaust flow from the test chamber shall pass through a high-efficiency filter before release.

(l) When sodium chloride aerosol is used, the relative humidity inside the test chamber shall not exceed 50 percent.

(m) The limitations of instrument detection shall be taken into account when determining the fit factor.

(n) Test respirators shall be maintained in proper working order and inspected for deficiencies such as cracks, missing valves and gaskets, etc.

4. Procedural Requirements

(a) When performing the initial positive or negative pressure test the sampling line shall be crimped closed in order to avoid air pressure leakage during either of these tests.

(b) An abbreviated screening isoamyl acetate test or irritant fume test may be utilized in order to quickly identify poor fitting respirators which passed the positive and/or negative pressure test and thus reduce the amount of QNFT time. When performing a screening isoamyl acetate test, combination high-efficiency organic vapor cartridges/canisters shall be used.

(c) A reasonably stable challenge agent concentration shall be measured in the test chamber prior to testing. For canopy or shower curtain type of test units the determination of the challenge agent stability may be established after the test subject has entered the test environment.

(d) Immediately after the subject enters the test chamber, the challenge agent concentration inside the respirator shall be measured to ensure that the peak penetration does not exceed 5 percent for a half mask or 1 percent for a full facepiece respirator.

(e) A stable challenge concentration shall be obtained prior to the actual start of testing.

(f) Respirator restraining straps shall not be overtightened for testing. The straps shall be adjusted by the wearer without assistance from other persons to give a reasonable comfortable fit typical of normal use.

(g) The test shall be terminated whenever any single peak penetration exceeds 5 percent for half masks and 1 percent for full facepiece respirators. The test subject shall be refitted and retested. If two of the three required tests are terminated, the fit shall be deemed inadequate.

(h) In order to successfully complete a QNFT, three successful fit tests are required. The results of each of the three independent fit tests must exceed the minimum fit factor needed for the class of respirator (e.g. half mask respirator, full facepiece respirator).

(i) *Calculation of fit factors.*

(1) The fit factor shall be determined for the quantitative fit test by taking the ratio of the average chamber concentration to the concentration inside the respirator.

(2) The average test chamber concentration is the arithmetic average of the test chamber concentration at the beginning and of the end of the test.

(3) The concentration of the challenge agent inside the respirator shall be determined by one of the following methods:

(i) average peak concentration

(ii) Maximum peak concentration

(iii) Integration by calculation of the area under the individual peak for each exercise. This includes computerized integration.

(j) Interpretation of test results. The fit factor established by the quantitative fit testing shall be the lowest of the three fit factor values calculated from the three required fit tests.

(k) The test subject shall not be permitted to wear a half mask, or full facepiece respirator unless a minimum fit factor equivalent to at least 10 times the hazardous exposure level is obtained.

(l) Filters used for quantitative fit testing shall be replaced at least weekly, or whenever increased breathing resistance is encountered, or when the test agent has altered the integrity of the filter media. Organic vapor cartridges/canisters shall be replaced daily (when used) or sooner if there is any indication of breakthrough by a test agent.

[FR Doc. 93–1277 Filed 1–26–93; 8:45 am]

BILLING CODE 4510–26–M

federal register

Tuesday
March 23, 1993

Part III

Environmental Protection Agency

40 CFR Parts 72, 73 and 75
Acid Rain Allowance Allocations and Reserves; Final Rule

ENVIRONMENTAL PROTECTION AGENCY

40 CFR Parts 72, 73 and 75

[FRL-4603-8]

Acid Rain Allowance Allocations and Reserves

AGENCY: Environmental Protection Agency.

ACTION: Final rule.

SUMMARY: Title IV of the Clean Air Act, as amended by the Clean Air Act Amendments of 1990 (the "Act"), directs the Environmental Protection Agency ("EPA") to establish an acid rain program to reduce the adverse effects of acidic deposition. The centerpiece of this control program is the allocation of allowances, or authorizations to emit SO_2, which are distributed by the Administrator in limited quantities to existing utility units and which eventually must be held by all affected units to cover their SO_2 emissions. To set the foundation of this program, EPA must: Allocate allowances for those units covered by the SO_2 emissions limitation requirements from 1995 to 1999 (Phase I), publish a list of initial allocations of allowances for affected utility units that must comply with Acid Rain emissions requirements beginning in the year 2000 (Phase II), and establish allowance reserves (for the Phase I Extension program, the energy conservation and renewable energy program, the clean coal technology repowering program, and the Special Allowance Reserve for EPA auctions and sales). On July 7, 1992, EPA proposed these allowance allocations and reserves.

EPA published as final three provisions from the July proposal, relating to Phase I of the Acid Rain program, on January 11, 1993 along with final Acid Rain regulations for the allowance system, permitting, emissions monitoring, excess emissions, and administrative appeals. EPA promulgated the Phase I allowance allocations in 40 CFR 73.10. In addition, the Agency finalized the Special Allowance Reserve for Phase I allowances and the reserve for the Phase I Extension program.

This regulation finalizes the remaining portion of the July 7 proposal, including: Regulations governing allocations of early reduction credits for Phase I and II, all Phase II initial allowance allocation provisions, as well as reserves and set-asides and repowering allocations, rules for small diesel refiners to apply for allowances, and applicability provisions of 40 CFR part 72 regarding co-generators, qualifying facilities and independent power producers, and solid waste incinerators.

Also published elsewhere in the **Federal Register** is the Notice of Availability of the revised final National Allowance Data Base (version 2.11) (NADB version 2.11) and the final Supplemental Data File, which support the allocation of allowances under the Acid Rain Program.

EFFECTIVE DATE: These rules are effective March 23, 1993.

ADDRESSES: All material supporting this notice is available for viewing and copying under Docket A-92-06 at the EPA Air Docket (LE-131), Environmental Protection Agency, 401 M Street, SW., Washington, DC, 20460, room M-1500 on the first floor of Waterside Mall. Hours are 8:30 to 12 noon and 1:30 to 3:30 p.m., Monday through Friday, excluding legal holidays.

The final NADB, supporting documents, this rule, and the Technical Documentation for Final Phase II Allowance Allocations are available through the EPA's Office of Air Quality Planning and Standard's TTN electronic Bulletin Board free of charge. The bulletin board may be accessed through (919) 541-5742.

Copies of the revised final NADB (on diskette only) and supporting documents (hard copies available on request) may be obtained from the following sources:

U.S. Environmental Protection Agency, Acid Rain Division, 6204J, 401 M Street, SW., Washington, DC, 20460, Attn: NADB.

Serving Maine, New Hampshire, Vermont, Massachusetts, Rhode Island, and Connecticut:
U.S. Environmental Protection Agency, Region 1 (APS), J.F. Kennedy Federal Bldg., room 2203, Boston, MA, 02203, Attn: Ian Cohen.

Serving New York and New Jersey:
U.S. Environmental Protection Agency, Region 2 (2AWM-AP), Jacob Javitz Federal Bldg., 26 Federal Plaza, New York, NY, 10278, Attn: Gerry DeGaetano.

Serving Pennsylvania, Delaware, Maryland, West Virginia, the District of Columbia, and Virginia:
U.S. Environmental Protection Agency, Region 3 (3AT11), 841 Chestnut Bldg., Philadelphia, PA, 19107, Attn: James Topsale.

Serving Kentucky, North Carolina, Tennessee, South Carolina, Georgia, Alabama, Mississippi, and Florida:
U.S. Environmental Protection Agency, Region 4, 345 Courtland Street, NE., Atlanta, GA, 30365, Attn: Kevin Taylor.

Serving Michigan, Wisconsin, Minnesota, Ohio, Indiana, and Illinois:
U.S. Environmental Protection Agency, Region 5, (5-AE-17J), 77 West Jackson Blvd., Chicago, IL, 60604. Attn: David Schulz.

Serving Arkansas, Oklahoma, Louisiana, Texas, and New Mexico:
U.S. Environmental Protection Agency, Region 6 (6T-AN), First Interstate Bank Tower, 1445 Ross Avenue, suite 1200, Dallas, TX, 75202-2733, Attn: Joe Winkler.

Serving Iowa, Nebraska, Missouri, and Kansas:
U.S. Environmental Protection Agency, Region 7, 726 Minnesota Avenue, Kansas City, KS, 66101, Attn: Jon Knodel.

Serving North Dakota, South Dakota, Montana, Wyoming, Colorado, and Utah:
U.S. Environmental Protection Agency, Region 8, 999 18th Street, suite 500, Denver, CO, 80202-2405, Attn: Mark Komp.

Serving Nevada, California, and Arizona:
U.S. Environmental Protection Agency, Region 9 (A-2-3), 75 Hawthorne Street, San Francisco, CA, 94105, Attn: Michael Stenburg.

Serving Idaho, Washington, and Oregon:
U.S. Environmental Protection Agency, Region 10 (AT082), 1200 Sixth Avenue, Seattle, WA, 98101, Attn: David Bray.

For their members:
American Public Power Association, 2301 M Street, NW., 3rd floor, Washington, DC, 20037, Attn: Larry Mansueti.

Edison Electric Institute, 701 Pennsylvania Avenue, NW., 5th floor, Washington, DC., 20004, Attn: John Kinsman.

National Coal Association, 1130 17th Street, NW., Washington, DC, 20036, Attn: Jerry Karaganis.

National Rural Electric Cooperatives Association, 1800 Massachusetts Avenue, NW., Washington, DC, 20036, Attn: Rae Cronmiller, Environmental Counsel.

State and Territorial Air Pollution Program Administrators/Association of Local Air Pollution Control Officials (STAPPA/ALAPCO), 444 North Capitol Street, NW., Washington, DC, 20001, Attn: William Becker.

Utility Air Regulatory Group, 2000 Pennsylvania Avenue, NW., suite 9000,Washington, DC, 20036, Attn: Lynn Johnson.

FOR FURTHER INFORMATION CONTACT: Acid Rain Hotline, (617) 674-7377 or Kathy A. Barylski, Acid Rain Division, telephone (202) 233-9170. The mailing address is US EPA, (6204J), 401 M Street, SW., Washington, DC, 20460.

SUPPLEMENTARY INFORMATION:

The contents of this preamble are as follows:

A. Background
B. Applicability Under Phase II of the Program
C. Initial Phase II Allowance Allocation Provisions
D. Method for 1998 Revisions

E. Early Reduction Credits
F. Repowering
G. Reserves
H. Allocations for Small Diesel Refineries
I. Summary of Final Rules
J. Regulatory Impact Analysis (Executive Order 12291)
K. Regulatory Flexibility Act
L. Paperwork Reduction Act

A. Background

The burning of fossil fuels, particularly coal and oil, releases emissions of sulfur dioxide (SO_2) and nitrogen oxides (NO_x) into the atmosphere. Once in the air, SO_2 and NO_x may undergo various chemical reactions, resulting in transformation of the emissions into sulfates, nitrates, sulfuric acid, and nitric acid. These compounds can fall to earth near the source or be transported hundreds of miles. Referred to as acid deposition or acid rain, these compounds can be either dry (gases, aerosols, and particles) or wet (precipitation such as rain, fog or snow). SO_2 and NO_x emissions and their byproducts damage both ecosystems and materials, are suspected of harming human health at current levels, and reduce visibility.

Of the approximately 23 million tons of SO_2 and 19 million tons of NO_x emitted annually from all sources in the United States in 1985, about 16 million tons of SO_2 and 7 million tons of NO_x were emitted by electric utilities. Title IV of the Clean Air Act requires EPA to establish a national emissions cap of 8.95 million tons per year on electric utility SO_2 emissions and an Acid Rain Program to be implemented in two phases. Phase I (beginning in 1995) requires the 110 highest-emitting utility plants to meet an intermediate SO_2 emissions limitation. By the year 2000 (in which Phase II begins), virtually all utility units will be required to meet stringent emissions limitations. Total annual SO_2 emissions will be reduced by 10 million tons below 1980 levels, beginning in the year 2000, a reduction in total SO_2 emissions of approximately 40%. Title IV also requires that certain coal-fired units reduce their emissions of NO_x to a level achievable through installation of low-NO_x burner technology at the same time that they are required to comply with SO_2 emission limitations.

The centerpiece of the Acid Rain Program is a unique trading system in which allowances (each authorizing the emission of up to one ton of SO_2) are bought and sold at prices determined in a free market. Existing utility units are allocated allowances based on their historic fuel use and the emissions limitations specified in the Act. Utility units are required to limit SO_2 emissions to the number of allowances they hold, but since allowances are fully transferrable, utilities may meet their emissions control requirements in the most cost-effective manner. For instance, a utility may decide to: (1) Switch to a lower sulfur fuel, (2) install flue gas desulfurization equipment (scrubbers) and bank unused allowances or sell them to other utilities or individuals, (3) forego emissions reductions and buy additional allowances (if necessary), or (4) implement energy efficiency measures at the plant or by encouraging customers to undertake them. Other options and combinations are possible, providing an unusually high degree of flexibility for affected sources to comply with the law.

This rulemaking primarily concerns the allocations of allowances for Phase II of the program. Five rules were finalized in January, 1993 [1]: regulations regarding Acid Rain permits (codified at 40 CFR part 72), allowance trading and tracking (codified at 40 CFR part 73), emissions monitoring (codified at 40 CFR part 75), excess emissions penalties and offset requirements (codified at 40 CFR part 77), and administrative appeals procedures (codified at 40 CFR part 78). Also, in November 1992, regulations for the nitrogen oxides (NO_x) control program, pursuant to section 407 of the Act, were proposed (57 FR 55632, November 25, 1992). At a later date, requirements for sources that elect to participate by "opting-in" to the Acid Rain Program, pursuant to section 410 of the Act, will be proposed.

B. Applicability Under Phase II of the Program

1. Background

Unlike Phase I, which affects only 110 plants, Phase II affects a broad group of utility units. Approximately 2,200 existing utility units are affected, and most new utility units will be affected when they commence commercial operation. (See 40 CFR 72.203(c)).

Most Phase II applicability provisions were made final in the Acid Rain permits rule. However, provisions for cogenerators, qualifying facilities and independent power producers, and solid waste incinerators were re-proposed with the proposed allowance allocations rule in July 1992, and are made final today with this rule.

Also, EPA is today amending 40 CFR 72.6(a)(2), which on finalization with the core rules read, in part, "An existing unit that is identified as qualifying for an allowance allocation under regulations implementing sections 403 and 405 of the Act * * *." Today's allowance allocations rules in 40 CFR part 73 are the rules implementing sections 403 and 405 of the Act. In particular, Tables 2 and 3 of § 73.10 specify the utility units which qualify as eligible for allowance allocations under the Act. Therefore, today's rule amends this paragraph to refer to Tables 2 and 3 of § 73.10.

2. Procedures for Determining Applicability

EPA considered, during development of the proposed rule, whether regulatory procedures for certification of exemption under section 405(g)(6) would be beneficial. EPA proposed that clear, objective criteria provide sufficient notice to all units. A number of commenters, representing several industry sectors (including cogenerators and independent power producers) requested a method by which EPA would certify whether a specific unit is affected. They noted that the lack of EPA certification at the time of financing, which is well before Phase II permitting will begin, could cause projects to fail, even though they may be exempt from the Acid Rain Program requirements. One commenter pointed out that without EPA certification, the States will make decisions during permitting under title V of the Clean Air Act. Individual State action could result in inconsistent determinations across the country, and such potential inconsistency runs counter to EPA's stated need for a nationally consistent program for Acid Rain.

Several procedural options were suggested. An association suggested a streamlined non-evidentiary advisory opinion process. This process would require an advisory opinion to be issued from an EPA program manager, based on the written representations made by the project developers. Another commenter suggested a process similar to Federal Energy Regulatory Commission (FERC) qualifying facility certification, including **Federal Register** notice and comment.

Response: EPA is adopting, in the final regulation in 40 CFR 72.6(c), a procedure by which certifying officials of any potentially affected unit can petition for a determination of applicability for title IV. EPA chose not to require these petitions to be submitted by designated representatives, as these units may not

[1] These rules are called the Acid Rain core rules, 58 FR 3590 (January 11, 1993). Future citations to the **Federal Register** will be omitted unless a specific page will be of assistance. All references in this preamble to January 11 rules are to the rules published at 58 FR 3590. Any reference to the "proposed core rules" or "December 3 proposal" are to the rules proposed at 56 FR 63002 (December 3, 1991).

be affected, but is requiring the petition to meet the procedural requirements of § 72.21 and the certifying official to provide copies of the petition, and the Administrator's response to all owners and operators.

The procedure requires submittal of a written request and relevant and appropriate information about the unit. In response to that request, EPA would produce a letter stating that based on the submittal, the unit is exempt, affected, or EPA cannot make a determination based on the information. If the information submitted was inadequate for such a determination, EPA may request additional data. The petition must be submitted before the unit is issued its Phase II Acid Rain permit. The response letter will constitute final Agency action, will be binding upon the permitting authority, and such determination may be appealed through the Acid Rain Appeals process in 40 CFR part 78.

Although several commenters requested a fixed timeframe for EPA to make such determinations relative to such requests, the Agency declines to adopt a rigid timeframe. Because of the importance of these determinations, the Agency intends to produce responses as rapidly as possible.

3. Retired Units

In the preamble to the proposed allocations rule, EPA discussed the treatment of units that retired prior to 1985 and returned to operation later. EPA stated, at that time, that: "if a unit that was retired or inactive prior to 1985 returns to operation without substantial modification, EPA believes that the unit should be treated as an existing unit with its original on-line date. Thus, for a unit that retired or became inactive prior to 1985 and returned to operation after 1987, in general, no allowances would be allocated." (57 FR 29953, July 7, 1992)

In the final core rules, EPA provided that affected units, retiring prior to being issued a Phase II Acid Rain permit, could avoid installation of continuous emissions monitoring systems otherwise required. The rules did not define "retire."

Two commenters raised the issue that units that did not serve a generator of greater than 25 MWe as of enactment (November 15, 1990) (or thereafter) are exempt from the program, (because they do not meet the definition of an existing unit and, therefore, are not existing affected units for the purposes of title IV), even if prior to enactment the unit did serve a generator of greater than 25 MWe. As a commenter pointed out, the definition of "existing unit," which is tied to the present tense "serve," is independent of operations during the baseline period (1985–1987).

Response: First, EPA agrees with the commenter whose unit served a generator larger than 25 MWe during the baseline period but only served a generator of less than 25 MWe upon enactment. Such a unit did not, as of November 15, 1990, and does not currently serve a generator of greater than 25 MWe. That unit has been deleted from Table 2 (see also discussion of Table 2 at section C. below).

Second, EPA believes that Congress meant to allocate allowances to units in the NADB that operated during the baseline period but retired prior to enactment. In fact, five units in Table A of title IV, which receive Phase I allowance allocations, operated during the baseline period but retired prior to enactment of the Clean Air Act Amendments (as reported to the Energy Information Agency). It would be inconsistent to prevent similarly situated units from receiving Phase II allowance allocations. Therefore, these units are allocated allowances in today's rule.

However, several units proposed to receive allocations of Phase II allowances did not serve a generator selling electricity (and did not have any fuel consumption) during the baseline period (1985 through 1987) and were formally retired prior to enactment, but were not retired prior to 1985. These units do not meet the definition for "existing unit" or "utility unit" and so are exempt from the requirements of the Acid Rain Program. Therefore, these units are ineligible for allowance allocations and are not listed in Table 2.

4. Units on Standby

The proposed rule and preamble did not specifically discuss treatment of units that have been placed on "standby." One commenter stated that these units do not "serve" a generator, and, therefore, should be exempt.

Response: EPA disagrees with the commenter. As the commenter made clear, the purpose of the "standby" designation is so the unit may be operated at any time. The commenter's unit has effective operating permits. EPA believes that the term "serve" should be read to mean either providing steam or capable of providing steam to the generator. The only units EPA can confirm as not serving a generator, through EIA data, are those units that are reported as retired.

EPA notes that utilities may avoid the cost of compliance with the Acid Rain Program by retiring such units and submitting necessary documentation under 40 CFR 72.7.

5. Cogeneration Units

The definition of "utility unit" excludes certain units that cogenerate steam and electricity. Under section 402(17)(C) of the Act, a unit that cogenerates steam and electricity and that was in operation or commenced construction on or before November 15, 1990 is exempt from the Acid Rain Program if it was constructed for the purpose of supplying one-third or less of its potential electric output capacity or 25 MWe or less electrical output to any utility power distribution system for sale. Likewise, a unit that cogenerates steam and electricity and that commenced construction after November 15, 1990 is exempt if it supplies one-third or less of its potential electric output capacity or 25 MWe or less electrical output to any utility power distribution system for sale.

a. Defining "Potential Electrical Output Capacity"

Determination of the one-third of potential electrical output capacity could be ambiguous. For part 73, EPA proposed a definition of "potential electrical output capacity" similar to the definition provided in 40 CFR 60.41a (subpart Da), but not identical. The proposed definition read: "Potential Electrical Output Capacity means the total electrical output (in MWe) over a specified period of time resulting from the operation of the unit at 33 percent of its maximum design heat input." Whereas, the definition in subpart Da reads: "Potential Electrical Output Capacity is defined as 33 percent of the maximum design heat input capacity of the steam generating unit (e.g., a steam generating unit with a 100–MW (340 million Btu/hr) fossil-fuel heat input capacity would have a 33–MW potential electrical output capacity. * * *" Several utilities commented on the change, several in support and one opposed to the change in definition.

Response: The Agency intended in the proposal to maintain the substantive meaning of "potential electric output capacity" as defined in subpart Da, but also to improve the useability of the definition. The final definition reads: "Potential electrical output capacity means the MWe capacity rating for the unit which shall be equal to 33 percent of the maximum design heat input capacity of the steam generating unit, as calculated according to appendix D of part 72." Appendix D includes and expands the example that was included in the subpart Da definition. The

example provides the necessary conversion factors for calculation.

b. Measuring Electrical Output

The statute uses the term "25 MWe electrical output." However, electrical output is not measured in megawatts but in megawatt-hours. For ease in measurement and to conform to the annual nature of the program, EPA proposed 219,000 megawatt-hours electrical output in place of 25 MWe (which is a capacity term) because 219,000 MWe-hrs equals 25 MWe times 8760 hours per year.

Several commenters supported the proposal and one commenter opposed it. The commenter opposed to the provision felt that EPA was enlarging the scope of the exemption because large generators that sell only a small amount of electrical output would be exempt. The supporters appreciated the ease in measuring electrical output, because output records are maintained.

Response: EPA is retaining the proposed term. EPA believes that the method by which output or output capacity is measured is within the Agency's discretion because the statute does not specify a method. EPA believes that operational equivalent to a generator of 25 MWe running at full capacity is a reasonable interpretation of the statute. In fact, the Bush Administration's original submittal did not affect units serving generators less than 75 MWe and included the one-third of potential electrical output capacity and 25 MWe criteria for cogenerators. Apparently, the drafters believed that a unit with potential electrical output capacity of 75 MWe could sell as electricity up to one-third of that potential (25 MWe) and still be exempt. Also, the Agency understands from the utility industry that installed generator capacity is not always associated with any specific need and, in fact, may be substantially larger than the facility needs. Thus, to adopt a standard based on generator nameplate capacity (as done elsewhere in the statute explicitly) would penalize such facilities without purpose. Because the statute is not explicit, EPA believes that the proposed approach properly targets the amount of electricity produced rather than the size of the generator from which the electricity is produced.

c. Net Versus Gross Calculation

The proposed rule did not specify whether the 219,000 MWe-hrs would be a gross figure or net (equal to MWe-hrs purchased from the grid subtracted from the gross sales to the grid), although the proposed language implied gross sales. Several commenters understood the proposal to require gross sales, while noting that the subpart Da program upon which this exemption is based uses net rather than gross sales. EPA has confirmed that understanding of the subpart Da program.

Response: EPA has finalized the rule to be explicit as to gross sales.

First, EPA reviewed the purposes of the two programs to determine if any distinction should be made between them. While subpart Da requires installed control technology on every unit meeting certain requirements and was drafted to encourage the development of cogeneration units, the Acid Rain Program is designed to decrease emissions from an entire sector (the electric generating industry) and to limit the shifting of utilization from affected units to unaffected units (such as cogenerators).

Second, EPA believes the statutory provision was designed to differentiate between cogenerators selling only their excess power and those facilities that operate like a utility unit. Cogenerators that sell large portions of their electricity, and buy back at other times, are operating much like peaking units owned or operated by utilities.

Third, EPA believes that, if the use of net generation was allowed for cogenerators, traditional utilities would claim its use to be unfair. Utility units are unable to be exempted through the use of net generation due to wholesale power arrangements among utilities. EPA considered and rejected comments supporting netting in the development of the core rules. The use of net generation would clearly violate the Congressional intent to consider virtually the entire utility industry affected under the Acid Rain Program.

In conclusion, EPA believes that cogenerators that sell, in gross, more than one-third of their potential electrical output capacity and 219,000 MWe-hrs are in the business of selling electricity and should be treated as affected units under the Act.

d. Determining Purpose of Construction

As previously noted, cogenerators "constructed for the purpose of supplying" less than or equal to one-third of their potential electrical output capacity or less than or equal to 25 MWe are exempt from requirements under title IV. Because of the difficulty in determining such purposes at the time of construction, particularly for older units, EPA proposed the use of 1985 through 1987 data, due to availability of such data and its correspondence with the 1985–1987 baseline. The preamble also proposed that data such as that included on Form EIA–867 listing the maximum number of megawatts a unit is designed to provide to the grid would be considered conclusive and requested comment on this issue.

One utility agreed with the use of 1985–1987 historical information, but commented against using EIA–867 data as conclusive because the EIA–867 lists sales of electricity, not the purpose of construction.

Response: EPA has retained the use of 1985–1987 data when other information on intent is lacking. EPA is not adopting a presumption regarding use of EIA Form 867 in this rule because the form only lists actual sales and is only available for recent years. In determinations of applicability, EPA will consider documentation on a case-by-case basis.

e. Continuing Requirements

EPA discussed in the preamble to the proposed rule that the measurement of electrical output to the grid needs to be a continuing requirement, not measured solely at commencement of operation, in order to prevent compromise of the environmental integrity of the program. One commenter on the Acid Rain proposed core rules specifically recommended such a requirement. Although the preamble for the proposed allocation rule discussed such a requirement as being proposed, the proposed rule language inadvertently did not include implementing language. In the proposed rule, EPA requested comments on whether such continuing requirement should be measured on an annual basis or on a two-year average.

Several utility commenters opposed any continuing requirement, arguing that the emissions from cogenerators remain the same regardless of proportion of energy used to produce electricity. One commenter requested that EPA enforce a continuing requirement.

Two commenters requested multi-year averaging, one requesting three- to five-year averaging. One commenter opposed multi-year averaging.

Response: EPA is adopting in the rule a requirement that cogenerators continue to sell electricity equal to or less than the criteria of one-third potential electrical output capacity or 219,000 MWe-hrs in order to maintain their exemption. EPA believes this continuing requirement (along with the continuing requirements for other exempt units) is necessary to ensure that the 10-million-ton reduction envisioned by Congress is achieved. Otherwise, a utility could simply shift electric generation from affected units to exempt units and cause an overall increase in

emissions from boilers serving generators selling electricity.

EPA is adopting three-year averaging for the continuing requirement for cogenerators and solid waste incinerators (see below). EPA believes that such averaging is necessary and appropriate because these units' requirements are based on operations, rather than physical plant configuration. EPA agrees with commenters that single-year averaging would be onerous in that it would make units affected due to only slight exceedances of the criteria. If the exceedance is a one-time event, the Agency believes it would be arbitrary to require compliance with the Acid Rain Program for all future years. EPA believes that the three-year average is consistent with the baseline period for affected units and is appropriately applied here to issues of facility operations.

To complete the requirements, EPA has added provisions to § 72.30 Requirements to Apply and § 75.4 Compliance Dates. Cogenerators and solid waste incinerators that do not meet the continuing requirements for exemption will be required to submit a complete Acid Rain permit application no later than the later of January 1, 1998 or March 1 of the year after the three-calendar-year period in which the exemption requirements have not been met. While EPA considered making the Acid Rain Program requirements applicable January 1 following the three-year period, as with other aspects of the Program, the Agency felt such immediate compliance was onerous. EPA believes that 60 days following the three-year period should suffice for development and submittal of the Acid Rain permit application.

Certification tests for continuous emission monitoring systems and continuous opacity monitoring systems will be required no later than the later of January 1, 1995 or 90 days after the unit becomes subject to the Acid Rain Program requirements (that is, the day after the unit fails to qualify for an exemption).

6. Solid Waste Incinerators

Section 129(h)(4) of the Act specifies that solid waste incinerators are exempt from title IV if more than 80 percent (on a Btu basis) of the annual fuel consumed at such units is other than fossil fuels. This provision requires that the Administrator determine a baseline period in which to measure this average fuel consumption. Because section 129(h)(4) relates only to the Acid Rain Program, EPA proposed, for solid waste incinerators that began operation before January 1, 1985, to use the same time frame (that is, 1985–1987) as is used to determine baselines for allocation of allowances in section 402(4) of the Act. For solid waste incinerators that began operation after January 1, 1985, EPA proposed to average the first three years (36 months) of operation. Also, EPA proposed that, should a solid waste incinerator during any year in Phase II of the Acid Rain Program burn twenty percent or more (on a Btu basis) of fossil fuel, the incinerator will be considered affected under the Acid Rain regulations but will not be allocated allowances. This is similar to the treatment of existing units serving generators under 25 MWe (see 40 CFR 72.6).

Only one comment was received regarding the annual basis of such a continuing requirement. That comment supported a one-year basis for eligibility. However, several comments were received on a similar provision for cogenerators (above).

Response: EPA believes that any continuing requirement for solid waste incinerators should correspond with that selected for cogenerators because both are based on plant operations (as opposed to physical plant configuration). As discussed above, EPA believes that a three calendar year average is reasonable, as with the cogenerators, and has revised the rule accordingly.

7. Qualifying Facilities and Independent Power Producers

a. Background

Section 405(g)(6) of the Act provides an exemption from title IV requirements for qualifying facilities (QFs) and new independent power production plants (IPPs) that meet criteria set forth in clauses (A)(i)–(iv), regarding power purchase commitments. As discussed by Senator Wirth when offering the IPP amendments (see Congressional Record, March 22, 1990, S3027), the basic requirement of these provisions is that the source has already committed to generate electricity at a fixed price and is unable to pass through to the purchaser the costs of compliance with title IV. In today's rule, EPA is providing clear criteria by which such sources can determine whether they are affected units under title IV and what changes to the source project could result in the facility being treated as affected, and, as noted in section B.2., a certification process to obtain determinations of applicability.

b. Date of Certification of QF Status

In the proposed rule, the Agency included a requirement that QFs, to be exempt under section 405(g)(6), must have been certified by the Federal Energy Regulatory Commission (FERC) prior to enactment of title IV, November 15, 1990. EPA received a number of comments opposing this requirement because the FERC certification process is often late in the process of project development, after the power purchase commitment. Also, the commenters noted that QFs could not abuse the exemption from title IV due to the November 15, 1990 requirement for the power purchase commitment. No comments supported this provision.

Response: EPA agrees with the comments and has deleted this requirement.

c. Method of QF Certification

The proposed rule stated that a qualifying source "as certified by FERC under the Federal Power Act," is not affected if it meets the criteria for a power purchase commitment by November 15, 1990. Several commenters noted that the quoted language implies that only FERC's formal certification procedures will suffice and excludes the informal self-certification procedure contained in the Federal Power Act.

Response: EPA did not intend to limit the method of certification. As made clear by the commenters, a facility is a QF no matter which process it was certified or approved under. The final regulatory language does not require a specific certification procedure.

d. IPP or QF Ownership Prior to 11/15/90

EPA proposed to "close a loophole" that would allow an IPP or QF to be exempt from title IV requirements although the unit was previously owned by a traditional utility. EPA felt that the prior ownership indicated that the exemption was being misused and compliance costs could potentially be passed through to the utility. A number of comments requested modification or deletion of this provision stating that facilities that should otherwise be exempted would, due to this provision only, be affected by the Acid Rain Program requirements. No comments supported the provision as written.

Response: EPA is persuaded by the comments that prior ownership by a utility does not imply a misuse of the exemption nor does it suggest an ability to pass through compliance costs. Thus, EPA is deleting this provision.

e. Effect on Existing Independent Power Production Facilities

One issue raised in the re-proposal was whether only "new" independent power production facilities are exempt

from title IV due to the use of the term "new independent power production facility" in section 405(g)(6)(A) and the reference to clause "(iii)" of section 416(a)(2). EPA proposed to interpret clause "(iii)" to mean clause (D) of 416(a)(2) in order to exempt "existing" independent power projects. Commenters uniformly rejected this interpretation and cited earlier drafts of the Act which support a reference to clause (C) of section 416(a)(2).

Response: EPA agrees with the commenters. While the Agency's concern about existing IPPs was rational, there are, in fact, no IPPs that fit the definition of "existing unit" in title IV of the CAA. Thus, EPA has redrafted the IPP section to reflect a reference to clause 416(a)(2)(C).

However, one facility, believed to be the first IPP in the country, supplied subsequent comments. As the facility correctly assessed, the plant does not meet *either* the definition of "existing unit" or "new unit" in title IV of the CAA because it commenced commercial operation of a simple combustion turbine in October of 1990 and commenced operation of a combined cycle system in December of 1990. The facility agrees that, except for the IPP grandfathering, the plant would be affected under the Acid Rain Program. As EPA stated in the preamble to the proposed core rules (57 FR 63008), this unit would be treated as a new unit for the purposes of the Acid Rain Program. Therefore, EPA considers this facility (and any other similarly situated facilities) to be eligible for the exemption as new units.

f. Level of Commitment

In order to establish an objective program that exempts only those projects that are unable to pass through compliance costs because of significant sales commitments made prior to enactment of title IV, EPA proposed that, to qualify for an exemption, a source have committed a minimum percent of planned power production through any of the methods set forth in section 405(g)(6) clauses (i)–(iv) by the time of enactment. Because EPA believed that the signing of a power sales agreement represents a higher level of commitment than the other three conditions, with little room for negotiation by the parties, EPA proposed that a lower minimum percentage of planned power production be required in that instance than for other power purchase commitments. Using an analysis of the independent power and qualifying facility industry projects potentially affected by this provision, EPA proposed a 30% threshold for power sales agreements and 50% for other power purchase commitments.

Industry comments unanimously requested a common threshold for all power purchase commitments. The commenters stated that no one form of power purchase commitment signifies a project that is more advanced, or more likely to develop successfully, than another form of commitment. Most commenters also recommended the threshold to be set at 10% or 15% of planned capacity, because it represents a level at which the project is fairly certain.

Response: EPA is persuaded by the representations made in the comments. Congress did not indicate any difference between the types of power purchase commitments and it appears that any one could represent a firm agreement. Thus, there appears to be no reason for EPA to distinguish between the types of power purchase commitments.

Also, EPA understands that the thresholds for commitment proposed were unrealistically high and would have made some facilities affected even though they likely could not pass through compliance costs. From the data submitted, EPA believes the threshold should be set at 15% in order to ensure: (1) That the facility is viable, and (2) that compliance costs cannot be passed through.

g. Defining the Facility

While the Acid Rain Program is implemented on a unit (or boiler) basis, the section 405(g)(6) exemption is on a facility basis. EPA proposed to read "facility" (or "source" as stated in the proposal) to include all units in the QF or IPP designed for a common purpose and constructed for the generation of the electrical capacity proposed in the power purchase commitment. However, EPA understood from the IPP and QF industry that the actual electrical capacity constructed may vary up to 20 percent beyond the potential described in the power purchase commitments. EPA proposed that all units in the facility will be exempt from the program, so long as the installed electrical capacity is within 20% of the planned capacity, but units added to the facility at a later time would be required to comply with the Acid Rain Program.

Several commenters disagreed with the 20% figure and also requested clarification on which units at the facility would be required to comply with the Acid Rain Program requirements.

Response: First, a few commenters noted that most power purchase commitments specify net power to the grid, not gross power produced by the generator. Internal power use (such as for fuel conveyance systems and emissions control equipment) use the difference between gross and net power. EPA agrees that the power purchaser would care only about net power not gross. Thus, for the purposes of the QF and IPP provision, EPA has drafted the rule to refer to net planned output capacity and net installed output capacity.

Second, EPA agrees that the 20% value proposed was too low considering improvements in generation technology, possible changes in fuel sources, and increased efficiency due to fuel pre-treatment. EPA does not want to discourage efficiency improvements, in general. Also, actual installed generator output capacity often is greater than that specified by the developer (because the manufacturer must ensure a minimum capacity). Thus, in response to comments, EPA will allow a 30 percent increase in net capacity from the planned level on November 15, 1990 to the actual installation.

Third, one commenter noted that not all power purchase commitments include planned capacity and that EPA should allow contemporaneous documents (such as submissions to state environmental authorities or construction contracts) to demonstrate planned capacity. EPA has adopted the comment as meeting the intent of the provision.

Fourth, EPA is improving the language regarding which units at a facility will be affected by the Acid Rain Program requirements, should the installed facility capacity exceed the 30 percent limit. Because of the infinite possibility of facility configurations, EPA believes that the facility owner or operator may decide which units and generators will remain grandfathered and which affected, so long as the total grandfathered generator capacity is below the 30% threshold. Where units at a facility have differing emissions rates, EPA reserves the right to select which units are part of the exempt facility. If the facility is composed of one unit, the entire unit would become affected.

h. Facility Changes/Project Modification

QF and IPP project plans may be altered in many ways as the project develops, even after the signing of a power sales agreement. For example, partners may be added, the exact site of the source may be changed, or the size or type of the units may be increased or decreased. Several commenters requested clarification of EPA's position on the modifications in general and the

addition of regulatory language regarding what changes would cause a facility to become affected by the Acid Rain Program requirements.

Response: EPA agrees that additional regulatory language would assist the facilities in applicability determinations. EPA's primary concern in developing factors that may change or not change is that there be a commonality between the facility exempted and the facility as installed. Based on the legislative history, EPA believes that changes that would allow compliance costs to be passed through should result in forfeiture of the exemption.

Based on information provided in the comments on the QF and IPP industry, EPA believes that the key principle is the continuity of the agreement. For facilities selling electricity, the identity of the electric output purchaser is the most important factor. For steam sales, the identity of the purchaser and the location of facility should be constant, because the location of the facility is indicative of continuity of the steam host. Today's rule makes these requirements clear (at § 72.2 "Qualifying power purchase commitment" definition).

On the other hand, EPA believes a number of factors may legitimately change from planning stages to installation without jeopardizing the exemption. Such factors include the amount of electrical capacity (subject to the 30% limit on net production), location or name of the source, identity of the project owners or developers, configuration and operation of the source, and date of commencement of commercial operation. In general, terms and conditions of the power purchase commitment may change, so long as such changes do not affect the ability of the facility to pass through the costs of compliance with the Acid Rain Program. Because of the wide variety of potential changes that may be made, EPA is choosing not to list permissible changes to projects in the regulation.

However, QFs and IPPs are subject to a continuing requirement regarding ownership. Under the Federal Power Act, a qualifying facility may not be majority owned by a public utility. Similarly, the definition of IPP in Part 72 does not allow an IPP to have over 50 percent direct public utility ownership. If a public utility (or several public utilities) acquires more than 50% direct ownership of a QF or IPP, that facility will be subject to the Acid Rain Program requirements. Such a facility will be required to submit an Acid Rain permit application under § 72.30 and comply with the Acid Rain Program requirements.

C. Initial Phase II Allowance Allocation Provisions

1. Introduction

As provided in section 403(a)(1) of the Act, EPA is publishing the final allocations for Phase II allowances. These allocations consist of the basic allowances, bonus allowances, and other miscellaneous allocations provided for by the Act and promulgated in part 73, subpart B. Two allocations are specified for each existing affected unit and for units eligible for allowances under sections 405(g) (1), (2) and (3): one for the years 2000 through 2009, the other beginning in the year 2010.

EPA will revise the final allowance allocations by June 1, 1998, as provided in section 403(a)(1), to accommodate the actual number of allowances necessary for the repowered units under section 409 of the Act. In addition, as discussed in section C.3. of this preamble, EPA will accommodate allowance allocations for units which commence commercial operation before January 1, 1996 under section 405(g)(4). Also, the 1998 revised allowances will account for additional basic allowances to be allocated to units eligible for allowances under section 405(i)(2) of the Act. Units expected to be eligible for these allowances are listed in Table 4 of § 73.10.

Phase II allowances are calculated using 29 different equations in the statute. Of these equations, 23 calculate basic allowances, 5 calculate bonus allowances, and one provides permanent allowances. Most of these equations and the eligibility requirements for them are straightforward. EPA has prepared a report, "Technical Documentation for Phase II Allowance Allocations," which lists the statutory eligibility requirements for each equation and explains the equation. The Technical Documentation also includes the summary tables for the allowance allocations and is available from the sources listed in **ADDRESSES.**

2. Basis for Allowance Allocation Calculations

a. National Allowance Data Base and Data Files

In section 402(4)(C) of the Act, the Administrator is provided the opportunity to develop a corrected data base and to use that data base for the allocation of allowances. That data base is the National Allowance Data Base version 2.11 (NADB version 2.11), made final today elsewhere in the **Federal Register.** This data base has undergone public review and comment procedures, analogous to an informal rulemaking (see 56 FR 33278, July 19, 1991). The final NADB version 2.11, in conjunction with all previous elections and notifications, has been used to determine the allowance allocations for each existing affected unit for Phase II.

In addition to permitting data corrections in the NADB, section 402(4)(C) authorizes the Administrator to supplement the data base with "data needed in support of this title." Sections 404 and 405 of the Act include a number of provisions that require data that is not in the NADB in order for the Administrator to make certain allowance allocations. For example, section 405(c)(3) requires data on the number of electrical customers served. The additional data is contained in the Supplemental Data File (see the Notice regarding the NADB) and, along with data in the NADB, is "corrected data" for the purposes of section 402(4)(C).

The July 1992 Notice also allowed comment on the Adjunct Data File (ADF) which included information on electric generating sources linked to the grid but not owned by traditional utilities. These sources, called non-traditional utility units, could be affected by the Acid Rain Program requirements. For the final database, EPA has added those units from the ADF to the NADB in cases where the units are clearly affected by the Acid Rain Program requirements. EPA has discontinued development of the ADF.

Section 402(4)(C) does not require the Administrator to follow rulemaking procedures in correcting the data base and provides that corrected data are not subject to judicial review. EPA has attempted to develop the most accurate and fair data base by providing public review and comment on the National Allowance Data Base. EPA received over 200 documents in response to the NADB Version 2.0 and over 60 in response to Version 2.1. Section 402(4)(C) also expressly precludes judicial review of "(s)uch corrections" of, or "failure * * * to correct," data. EPA believes that this preclusion of judicial review, by its terms, applies to all "corrected data * * * used for the purposes of issuing allowances." This includes data in the NADB, the Supplemental Data File, and the Adjunct Data File. The preclusion of judicial review is designed to expedite the process by which EPA will allocate allowances and to avoid court involvement in highly technical issues. (For example, see Report of House Committee on Energy & Commerce, May 17, 1990, p. 371.) Consistent with this statutory purpose,

EPA's reading of section 402(4)(C) would prevent piecemeal and protracted review of all the relevant data, thus permitting the allowance allocations process to continue on schedule, providing certainty to the parties involved as to their future allowance allocations and, thereby, allowing utility planning and the development of an allowance market.

One commenter claimed that EPA had not followed the proper rulemaking procedures and is subject to judicial review on data issues.

Response: EPA disagrees with the commenter. Rulemaking was not required by the Act for the development of data upon which allowance allocations would be based. Contrary to the commenter's assertions, Congress clearly did not foresee such a rulemaking effort because they:

(1) Believed the data effort to be nearly complete with version 1.0 of the NADB;

(2) Provided no such requirement and no deadlines for such rulemaking (as was done for all other significant rulemakings to implement title IV); and

(3) Provided such a short deadline for the finalization of the allocations themselves, so short that intermediate data rulemakings would have precluded compliance.

In addition, EPA has done far more than required in the development of the data. The July 19, 1991 (56 FR 33278) Notice of NADB version 2.0 met the requirements of the Administrative Procedures Act for informal rulemaking. EPA docketed all comments and provided responses to those comments either in the July 7, 1992 Notice (57 FR 30034) or in the docket, in accordance with section 307 of the CAA. Again, contrary to the commenter's assertions, detailed responses to each individual comment are not required, particularly when the comment has been responded to as a class.

Also, today EPA has provided notice of the revised final NADB (version 2.11). That version and notice respond to comments made on version 2.1 which specified errors made by EPA in finalizing the NADB.

In summary, EPA believes that judicial review of data in the NADB and supplemental files is precluded by statute in order to avoid protracted litigation which would forestall the allocation of allowances. EPA believes the NADB is one of the most accurate and heavily reviewed databases ever developed by the Agency.

b. Elections

"Elections" are choices to be made by utilities, operating companies, or State Governors to utilize certain allowance calculation algorithms under Phase II. Utility elections are required for calculations to be performed under sections 404(h), 405(d)(3), 405(d)(4), and 405(g)(2). EPA published guidance for section 405 elections in the Federal Register (56 FR 10427, March 12, 1990). Certain states must also make an election to receive allowances under section 406(a), for which EPA also established guidance in the Federal Register (56 FR 28891, June 25, 1991).

During the comment period on the proposed allocations, state governors and utilities that had reserved their elections until the data was final or that made elections which, due to final data, were not the most beneficial to the utility were given the opportunity to complete or modify their elections.

No comments were received regarding EPA's proposal to follow a Governor's or utility's election even if the election did not result in the most favorable allocation of allowances.

After reviewing all elections received, EPA determined the allowance allocations for the eligible units. In order to give meaning to the elections, EPA has finalized the allocations to follow the elections specified by the unit, utility system, or state, as appropriate, even if the election does not result in the optimum (largest) number of allowances allocated.

3. Listing of Units for Phase II Allocations

a. Units Listed in Table 2

Section 73.10 Table 2, as proposed, was intended to list existing affected units (and units under section 405(g) of the Act) and their Phase II allowance allocations and reserve deductions. EPA intended to include only affected units from the NADB and all units on the ADF, but, due to an error, listed all units in both the NADB and ADF.

Table 2, as promulgated today, includes only units that EPA currently believes are affected. However, Table 2 may not list all units affected during Phase II of the Acid Rain Program (for example, units which will commence commercial operation on or after January 1, 1996). Any unit not listed in Table 2 but meeting the applicability requirements of 40 CFR 72.6 must meet all applicable requirements and will not receive allowance allocations under part 73, subpart B.

b. Treatment of Units Under Section 405(g)(4)

EPA proposed zero allocations in section 73.10 Table 2 for units that are expected to be eligible for allocations under section 405(g)(4) of the Act. EPA proposed that these units would be allocated allowances with the June, 1998 revised allowance allocations if they provided documentation that they commenced construction before December 31, 1990. No comments were received.

EPA has finalized the provisions for these units as proposed. However, to provide certainty for these units, EPA is providing Table 3 in the final rule which lists the allocations these units will receive if they supply the required documentation and if they commence commercial operation between January 1, 1993 and December 31, 1995, as required by the statute. The 1998 recalculation methodology is also modified to reflect the addition of this table.

4. Allocation to Units Under Section 405(g)(2)

The proposed rule treated allocations to units listed in Table B (section 405(g)(2) of the Act) the same as calculated ("unadjusted") basic allocations. These allocations were ratcheted and had reserves taken from them.

Utility owners of virtually all the plants listed in Table B claim that their plants are exempt from the ratchet. They supplied legislative history from the House Conference Committee reading: "These allowances shall not be subject to the reallocation, reduction, or redistribution mechanisms of this title." (Rep. Fields, Congressional Record, H12868, October 26, 1990). Also, one utility claimed these units are exempt from *all* allowance deductions (such as, the 2.8% for auction and sales reserves), based on this legislative history.

Response: EPA is not changing its treatment of allocations to these units. The statutory language is clear and does not treat basic allowances under section 405(g)(2) different from other basic allowances. Section 403(a)(1) provides limited exceptions to the 8.9 million allowance cap, and these exceptions do not include section 405(g)(2) allocations. The legislative history, however, is vague and fails to delineate from what provisions in the Act these allocations were to be exempt. Thus, EPA is not persuaded that the legislative intent was to exempt these basic allowances from provisions applicable to other basic allowance allocations.

5. Bonus Allowance Cap

Section 405(a)(2) of the Act allows EPA to allocate up to 530,000 bonus allowances annually for the years 2000 through 2009. However, this section provides no direction, as section

403(a)(1) does for the basic allowances, as to how the Agency is to allocate allowances if the number of bonus allowances otherwise would exceed 530,000. Congress clearly assumed that the 530,000 would not be exceeded. Since the proposed calculations of bonus allowance allocations slightly exceeded the 530,000 level, the Agency proposed provisions to deal with this exceedance. EPA proposed a pro rata reduction, similar to that required for basic allowances under section 403(a)(1); however, the proposed pro rata reduction for bonus allowances was only between 1 and 2 percent. The proposal treated section 406 "clean states" bonus allowances the same as all other bonus allowances for the purpose of the reduction.

The final bonus allowances, in aggregate, do not exceed 530,000, therefore, no pro rata reduction was necessary.

D. Method for 1998 Revisions

1. Introduction

Section 403(a)(1) requires the Administrator to publish, no later than June 1, 1998, a revised final statement of allowance allocations which includes the set-aside for repowering extension allowances and allowances for repowering units.

The proposed rule articulated the method that the Agency will use in publishing the revised list.

The final rule modifies the proposal for enhanced clarity and to account for newly added Tables 3 and 4. Also, EPA notes that the redistribution of allowances and proceeds from the allowance auction and sale, as proposed, did not account for the change in reserve deductions in 1998. EPA has finalized that section (§ 73.27) to properly reflect the revision of allowance allocations in 1998.

2. Repowering Set-Aside

The proposed allocations contained a set-aside for repowering extensions, which is approximately 500,000 allowances in total or 50,000 basic allowances for each of the years 2000 through 2009. The estimate that the Agency chooses to use for withholding allowances otherwise allocated to affected units is important because of its effect in the 1998 revision to the Phase II allowances. Because the allowances allocated for repowering are in excess of the 8.9 million limit on basic allowances, section 405(a)(2) provides a method to recapture some of the allowances from Phase II units' basic allowances. Section 405(a)(2) provides that for repowering extension allowances granted for calendar year 2000, one-tenth of that total will be taken from Phase II units' basic allowances for calendar years 2000 through 2009. If the Agency overestimates the number of allowances necessary to apply to the repowering projects, Phase II facilities would receive back any excess allowances as part of the 1998 revision of allowance allocations.

Given the wide range of estimates of the amount of repowering expected to occur, and the uncertainties associated with them, the Agency proposed to use a repowering estimate of approximately 10 gigawatts. Based on the 10-gigawatt estimate, EPA proposed to hold a total of 496,300 allowances in reserve, resulting in a pro-rata reduction of 49,630 each year from 2000 through 2009 from basic Phase II allowances.

Several commenters suggested various levels of repowering, ranging from 5 GWe to 25 GWe, based on policy considerations and not on technical evaluations. Two commenters felt that the Agency estimate of 10 GWe was satisfactory.

Response: EPA has maintained its estimate of 10 GWe for repowering, based on its previous studies (see Chapter 3 of the Technical Documentation for Phase II Allowance Allocations) and review of trade literature for plants planning to repower. Presently, less than 10 GWe expect to repower under Phase II. Also, EPA believes it is necessary to over-deduct allowances for this set-aside, rather than under-deduct because of the hardship that could result when plants have already traded their Phase II allowances. In addition, because the set-aside is an estimation rather than an exact calculation, EPA is rounding the annual set-aside to 50,000 allowances.

E. Early Reduction Credits

1. Background

Under section 404(e), certain Phase I and Phase II units may receive additional allowances, if they reduce their SO_2 emissions before the time they are required under the applicable section of the Acid Rain Title. These reductions must represent physical changes in the operation of the unit made after the date of enactment and may include changing the type or quality of the fuel being burned.

The procedures for applying for early reduction credits and the methodology used for calculating these credits are made final in today's rule.

2. Eligibility for Phase II-only Systems

EPA proposed to allow all units listed in Tables 1 or 2 of the July, 1992 **Federal Register** notice, whose utility met the eligibility criteria as provided under §§ 73.16(a) and 73.20(a), to be eligible for early reduction credits.

One commenter objected to the availability of early reduction credits to utilities that do not operate any Phase I units in their systems. This commenter cited a purported typographical error in section 404(e) that invalidates a condition of eligibility intended by Congress. The text is as follows:

> The Administrator shall allocate allowances for a unit that is an affected unit pursuant to section 405 (but is not also an affected unit under this section) and part of a utility system that includes 1 or more affected units under section 405 * * *.

The commenter suggested that, as written, the sentence is overly ambiguous, and requires the second section 405 reference to read section 404. That is, Phase II units (section 405) are only eligible for utilities that have at least one Phase I unit (section 404) in its system.

Response: EPA acknowledges the redundancy in section 404(e) as enacted, but believes that the statute is clear as to the eligibility requirements. Therefore, the Agency must follow the statute as enacted. EPA will not restrict the eligibility of early reduction credits and will allow utilities, even those operating only Phase II units, the opportunity to apply for such credits during the 1995 through 1999 period.

3. Eligibility for Substitution or Compensating Units

Upon review of the promulgated Acid Rain Permits rule, EPA recognized that certain Phase II affected units could be allocated allowances during Phase I under *both* the early reduction credit program and as either a substitution unit (under 40 CFR 72.41) or a compensating unit (under 40 CFR 72.43). Thus, such units would receive double allocations for the same reductions in emissions. Therefore, EPA has finalized the Phase II early reduction credit eligibility so that substitution units and compensating units are not eligible.

4. Comparison Year for Early Reduction Credits

EPA proposed, in its July, 1992 **Federal Register** notice, the use of calendar year 1990 as the "year prior to enactment" to provide the basis against which reductions in SO_2 and early reduction credits would be determined. EPA requested comments on using the calendar year 1990 versus the literal year prior to enactment from November 15, 1989 to November 15, 1990.

Commenters did not express a preference for these alternatives, but instead suggested other alternatives against which emissions reductions would be measured. One commenter proposed the use of the calendar year 1985, because baseline information, allowance allocations and other provisions of the Acid Rain Program are based on emissions in calendar year 1985. A second commenter suggested that the utility should be allowed to estimate the level of SO_2 emissions that would have occurred without the imposition of emission controls. The commenter asserts that SO_2 emissions for the utility would have been lower without the Clean Air Act Amendments of 1990 and that EPA should give credit for reductions from the higher projected levels resulting from the Act.

Response: EPA rejects both suggested alternative baselines and maintains its choice of calendar year 1990 as the year against which future emission reductions will be compared. Section 404(e)(2) makes clear that early reduction credits should be granted for reductions taking place after the date of enactment of the Clean Air Act Amendments of 1990 (November 15, 1990). Using the 1985 rate for the baseline would not differentiate reductions made from 1985 to 1990 and those made after calendar year 1990, that is, after enactment.

EPA also cannot accept a projected emissions rate for assessing reductions. A projected rate would be an estimated figure and therefore the reduction itself would be estimated rather than measured. Such estimation would be contrary to the overall rigor required by the Acid Rain Program for monitored emissions, except in those areas in which Congress specifically authorized other approaches. In addition, estimation could be performed differently at different units, and, therefore, the awarding of early reduction credits may not be consistent across utility units.

The commenter cited EPA's use of projected estimates for units applying for allowances under the Phase I extension reserve and questioned why such estimation is appropriate for the reserve and not appropriate for early reduction credits. The Agency believes that these two provisions are, in fact, different. First, section 404(d)(4) specifically mandates the allowance calculation for the Phase I extension reserve to be based, at least in part, on the projected emissions tonnage for 1995 and 1996. Section 404(e) does not contain an explicit provision to do so, though Congress could have chosen to include one. By not specifying the year against which to compare emission reductions, Congress gave EPA the discretion to consider appropriate years.

Second, the projected SO_2 tonnage estimates for 1995 and 1996 are capped under the Phase I extension reserve by historic emissions at the individual units from 1988 and 1989; clearly, Congress felt such estimates had to be limited. The commenter suggested no such limits for the early reduction credit program.

Third, the total number of allowances allocated under the Phase I extension reserve is capped at 3.5 million, which Congress established as an upper limit based on estimates of actual SO_2 reductions. No such cap exists for the early reduction credit program. EPA believes that the approach developed for early reduction credits is consistent with the overall criteria used by Congress in allocating allowances.

5. Calculation Approach for Early Reduction Credits

In the July, 1992 **Federal Register** notice, EPA requested comment on the merits of alternative approaches for determining the eligible emissions reductions used in allocating early reduction credits: a tonnage approach and an emissions rate approach. The tonnage approach compares an absolute level of SO_2 emissions in the prior year to emissions in 1990. This approach would cap emissions from these units, but would require further restrictions to prevent reductions in utilization from generating early reduction credits. Under the emissions rate approach, emission reductions are determined based on a reduction in the unit's emission rate. Rate reductions are not dependent on utilization levels, but EPA proposed to restrict credits in circumstances where undesirable shifts from clean to dirty units occur.

One commenter favored the tonnage approach as more consistent with the section's intent than EPA's proposed emission rate approach. Other commenters supported EPA in its selection of the emission rate approach, but some objected to the Agency's limiting of early reduction credits in circumstances where shifts in generation to higher emitting units occurred.

Response: EPA maintains its methodology for calculating early reduction credits as proposed. The Agency believes that the tonnage approach fails to recognize that ERC units, as a group, experienced low utilization during the baseline period, and that the tonnage approach would overly hamper future utilization of these units. In developing the emission rate approach, the Agency has sought to avoid restricting the economic operations of the utility's system.

On the other hand, EPA believes that some limitations on early reduction credits are warranted to prevent a utility from utilizing its ERC and non-ERC units in a manner that would increase the emission rate of ERC units relative to non-ERC units or would increase the emission rate at non-ERC units over time.

Congress intended that early reduction credits would encourage and reward utilities for undertaking real emissions reductions before they are required to under the Acid Rain Program. Congress did not intend early reduction credits to be created from shifts in operation among a utility's units nor did they seek to impose restrictions on growth or overall emissions through these provisions. EPA believes that the emission rate approach is consistent with Congressional intent.

6. Utilization Restrictions Related to the Emissions Rate Approach

As mentioned above, simple comparison of the emissions rates between the prior year and 1990 might encourage utilities to increase their reliance on units with greater emissions that are not eligible for ERC credits, in order to maximize possible credits at eligible units.

One commenter supported EPA's concern about such operations and suggested additional restrictions on the emission rate methodology:

(1) Include non-fossil units within the category of non-ERC units; and

(2) Require utilities to offset increased utilization at ERC units, unless total emissions could be shown to be lower as a result of such utilization.

Response: EPA rejects the inclusion of non-fossil units in its definition of non-ERC units. By including only fossil units in its definition of non-ERC units, the Agency wishes to compare fossil unit emissions with and without emission control measures and to avoid masking increases in utilization at higher emitting units. In addition, the inclusion of non-fossil units as non-ERC units could discourage utilities from shifting generation from non-ERC fossil units to non-fossil units; such shifts could cause the heat input for ERC units to become restricted.

As stated in the proposed rule, EPA believes the early reduction credit provision of the Act is designed to compensate those utility systems that shifted their electrical generation from coal-fired units to non-coal fired sources during the 1980's. By reducing their

coal-fired unit utilization and therefore their SO_2 emissions, these systems qualify for fewer allowances than they would have had they not shifted their generation. The early reduction credit provisions allow these systems to earn additional allowances if they undertake further emissions reductions before they are required to under title IV. These provisions allow for growth in the utilization of these units and were not intended to restrict total emissions from these sources. The Agency, therefore, believes that the suggested offset provisions are overly restrictive and not compatible with the Congressional intent of the provisions.

7. Other Issues Related to Early Reduction Credits

a. Qualification of ERC Units for Specific Years

One commenter requested the ability to qualify and disqualify units as ERC units in different years. ERC units would be units that qualify as in the EPA proposal but for which the designated representative has specifically requested early reduction credits only for a specific year(s). Units could therefore be ERC units in one year and then non-ERC units in the next. EPA rejects this request. Under such a system, utilities could alter the ERC status of their units and strategically manipulate the amount of early reduction credits they are awarded in a given year.

b. Weighted Capacity Factor Criteria

The weighted capacity factor proposed for all coal units in §§ 73.16 and 73.20 was misspecified in the proposed rule and is corrected in today's rule.

c. Use of Pre-Existing Monitors

A commenter requested the use of pre-existing continuous emission monitoring systems (CEMS) for units which have not installed and received certification under part 75 for their SO_2 CEMS prior to the calendar years for which credits for reductions are requested. The commenter preferred the use of its existing CEMS rather than EPA's proposed use of data from EIA Form 767. EPA denies the use of pre-existing CEMS for this purpose. Pre-existing CEMS are calibrated to prevent exceedances relative to the source's allowable limit, but for a unit operating well below that limit, it is unclear how accurate such data would be and how that accuracy would compare to the data reported on the EIA Form-767. EPA believes that an apportionment of data from the plant level to the unit level will be necessary whether or not pre-existing CEMS are in place (*e.g.*, for units sharing a stack and for calculations of heat input). Therefore, for purposes of consistency across ERC units and with the NADB, the Agency insists that EIA–767 data be used.

d. Filing Dates

One commenter expressed concern regarding the annual dates by which units must file to qualify for early reduction credits, especially for utilities who do not yet have certified CEMs and are applying for early reduction credits for the years preceding or directly following the final rulemaking. EPA is persuaded that these utilities should be granted additional time until the date by which the EIA Form 767 must be filed. Therefore, the final rule will allow utilities applying for early reduction credits for 1991 or 1992 until May 1, 1993, to apply for such credits. Utilities applying for early reduction credits for 1993 will have until May 1, 1994. Thereafter, utilities must file by March 1 of the following year.

Another commenter found the published notice confusing and requested clarification on the conditions under which the restricted heat input would apply in calculating early reduction credits. The equations remain the same, but have been reformatted in the rule to enhance clarity.

F. Repowering

Utilities considering repowering under section 409 of the Act were required to notify EPA by March 31, 1991. "Repowering" involves the installation of certain clean coal technology is defined at section 402(12) of the Act and in the final core rules under "qualifying repowering technology" (40 CFR 72.2). Section 409 is designed, through additional allowance allocations (repowering extension allowances), to encourage higher-emitting coal plants to meet their Acid Rain emissions limitations through repowering. Under section 409, repowering extension allowances are available to each eligible unit from January 1, 2000 through December 31, 2003. EPA is required to withhold allowances from Phase II basic allowances equal to the number of repowering extension allowances estimated to be necessary for the year 2000, in accordance with section 405(a)(2). Repowering extension allowances for calendar years 2001 through 2003 are not withheld from Phase II basic allowances and are additional allowance allocations (above the 8.95 million ton cap).

The July 19, 1992 proposal (57 FR 29940) reproposed the allowance allocation portion of the repowering program, but did not affect the procedural aspects of the program (contained in 40 CFR 72.44). EPA proposed to split the allocation of allowances to repowering units into two parts: (1) A basic allocation based on the unit's baseline times a rate of 1.2 lb/mmBtu, and (2) an incremental allocation based on the difference of the unit's baseline times the lesser of the unit's 1995 SIP (or Federally enforceable emission limitation) or its actual emissions and the unit's basic allocation. The actual number of allowances granted during the extension period is equivalent to that provided for in section 409(c)(1). This method contains critical features necessary for the operation of the allowance reserves and the 1998 revision.

No comments were received on these provisions and EPA has finalized them as they were proposed with slight modifications to make the provisions consistent with the final core rules. Also, today's rule amends § 72.44 to concisely refer to the allocation of allowances under § 73.21.

G. Reserves

The statute provides for the establishment of two reserves—the Conservation and Renewable Energy Reserve and the Special Allowance Reserve. Both reserves are established by deducting allowances from each unit's basic allowance allocations.

Only one comment was received on these provisions. That commenter seemed to believe that the deduction of allowances for reserves should be made *before* the basic allowances are reduced to the 8.9 million level. Thus, units would be allocated 8.9 million basic allowances and the reserves would be allocated additional allowances above the 8.9 million ton cap.

Response: The commenter is incorrect. Section 403(a)(1) of the Act precludes the Administrator from allocating more than 8.9 million basic allowances in any given year, starting in 2000. (The Administrator also must allocate 50,000 allowances under section 405(a)(3), bonus allowances, allowances for opt-in units, and allowances for repowering extensions.) Allocations to the reserves are allocations in the same sense as allocations to unit accounts. Allowances deducted from unit allowance allocations for reserves are available for use in the same year as they would have been for the unit. Thus, the sum of the unit basic allocations and the reserve allocations totals 8.95 million (the 8.9

million cap plus 50,000 allowances under section 405(a)(3)).

H. Allocations for Small Diesel Refineries

1. Background

Title IV allocates allowances for sulfur dioxide reductions to small refineries that desulfurize both on- and off-road diesel fuel. This program is designed to assist small refiners in defraying the capital costs of installing desulfurization equipment at their refineries. Small refineries are defined as those having a crude oil throughput of less than 50,000 barrels per day and whose parent company owns refineries with a total throughput of less than 137,500 barrels per day. Annual allowances are limited to 1,500 per refinery and to 35,000 for this entire category of refineries. (See CAA section 410(h).)

2. General Opposition to the Section 410(h) Program

Several large U.S. oil companies oppose the small diesel refiners program, because it subsidizes small refiners that merely meet diesel fuel standards. In general, they view this program as a misuse of the sulfur dioxide allowance program, which is aimed primarily at utilities. A subset of these large oil companies oppose the program on equity grounds, but accept that EPA has a responsibility to implement the Act.

Response: EPA has no choice but to implement the program that Congress intended, which is specifically designed for small refiners. It should be noted that the Act requires participants in this program to desulfurize both on- and off-road diesel fuel, which is more than the national sulfur standard requirement of the Clean Air Act Amendments.

3. "Portion of a Refinery"

Several large oil refineries are concerned that the phrase "portion of a refinery" under the eligibility requirements in the preamble and rule might inadvertently expand eligibility for the program beyond the threshold intended by Congress.

Response: EPA agrees that the phrase "portion of a refinery" is ambiguous. The legislative history of this provision makes reference only to "small refiners" and "small refineries" when referring to eligible facilities. (See, Congressional Record, S16959–16960, October 27, 1990.) However, because of the limitation on total throughput by the refinery owner, EPA does not believe the "portion of a refinery" clause enlarges the eligibility. At this time, EPA does not see a need to define the term and maintains the statutory language.

4. Qualifying Criteria

Section 410(h) makes small refineries eligible for allowance allocations if they, as of the date of enactment (November 15, 1990), (1) had crude oil throughput of less than 18,250,000 barrels per year, and (2) were owned or controlled by refiners with total combined throughput of less than 50,187,500 barrels per year, as reported to the Department of Energy. The proposed rule interpreted these eligibility requirements to be based on calendar year 1990 data.

One association of refineries commented that the proposed interpretation was not in accordance with Congressional intent and that the rule should include eligibility criteria based on calendar years 1988 and 1989. The association pointed out that section 410(h) superseded an EPA rulemaking (55 FR 34127, August 21, 1990), and, because the statute advanced the date that small refineries have to desulfurize fuel, provided the economic benefit through the allowance allocations. The association notes that Congress must have intended to provide the benefit to those refineries which were affected by the EPA rulemaking. For a refinery to be affected under the 1990 EPA rule, its average daily throughput was calculated for calendar years 1988 and 1989.

Response: EPA has modified the final rule to clarify the eligibility criteria and to incorporate the criteria from the 1990 rulemaking. However, because section 410(h) specifies "as of the date of enactment," EPA is utilizing the average of calendar years 1988 through 1990 refinery throughput.

Also, EPA agrees with a comment that only diesel fuel for motor use (on-highway and off-) is eligible for allowance allocations. Diesel fuel for heating purposes is not eligible. The definition of "small diesel refinery" has been modified accordingly.

5. Desulfurization Issues

In the preamble and rule for the proposed small diesel refiners rule, EPA states that allowances will be allocated only to those refiners that certify that they are desulfurizing both on- and off-road diesel fuel. An industry trade associate believes this allocation to be unfair as the national desulfurization standard of 0.05% applies only to on-road diesel fuel. This same organization also requests clarification that the installation of desulfurization equipment prior to the promulgation of the Clean Air Act Amendments of 1990 does not make that facility ineligible for allowances under this program.

Response: The Act states "* * * that all motor diesel fuel produced by the refinery for which allowances are claimed, including motor diesel fuel for off-highway use, shall have met the requirements of section 211(i) of the Act [the desulfurization standard]." The legislative history of this provision is equally insistent that participation in this program is based on a willingness to desulfurize both on- and off-road diesel fuel. (See remarks of Senator Simpson, Congressional Record, S16959, October 27, 1990.)

Additionally, any facility that meets the throughput and other eligibility requirements can receive allowances for desulfurizing fuel regardless of when the equipment was installed. It is certainly not the intention of EPA to punish those facilities that undertake desulfurization earlier than 1993. The program is merely designed to help defray the cost to those small facilities that take on the financial burden of desulfurization whether doing so independently of this provision or as a result of it.

6. Allowance Distribution for the Partial 1993 Year

The small diesel refiners provision does not go into effect until October 1, 1993 meaning there will only be three months of eligibility for allowances in that calendar year. An industry trade association desires that EPA allocate allowances based on actual desulfurization during those three months rather than a maximum of one-quarter of the 35,000 allowances set aside annually for this program (8,750 allowances).

Response: EPA accepts this comment and the rule has been adjusted to clarify this point. Refiners requesting allowances during this first cycle will be required to submit documentation for the entire year, but will only be allocated allowances for desulfurization taking place during the final three months. The total allocation can exceed 8,750 (one-quarter of 35,000), but not the annual cap of 35,000 allowances.

7. Pro-rata Versus First-Come, First Served Distribution

EPA sought comment on a distribution system should the program be oversubscribed in any given year. An industry trade association and a series of refiners commented in strong terms that the only equitable system is a pro-rata distribution in the event of oversubscription. No comments were received suggesting that a first-come

first-served approach would better suit the needs of all interested parties.

Response: EPA accepts the comment. A pro-rata distribution is consistent with the intent of both Congress and the Act to encourage desulfurization by as many small refiners as possible. EPA also notes that, unlike the Phase I extension provision which the statute specifies to be distributed in order of receipt (section 404(d)(3)), the small diesel refinery provision does not specify a method for distributing the allowances.

8. Blending

A series of small refiners desire a clarification of the blending issue. They are concerned that the normal blending that goes on in the production of petroleum products is not allowed under this rule.

Response: A review of the legislative history provides the following guidance and clarification: "The Conference did not intend for facilities to earn allowances if distillate is brought in from outside sources and blended or finished to the 0.05 standard. Process activities which are not contiguous to crude oil production runs at the refinery are not eligible for allowances." (Remarks of Senator Simpson, Congressional Record, S16960, October 27, 1990.) EPA has changed the definition of "desulfurization" to more clearly state that the prohibited activity is blending of low sulfur feedstocks from ineligible facilities with high sulfur feedstocks at eligible facilities for the purpose of earning allowances. On a related point, normal production practices will not be affected. This program is designed to assist small businesses defray the high costs of installing equipment that *removes* sulfur.

9. Program Undersubscription

A series of refiners commented in strong terms that a mechanism should be established to allow refiners to earn extra allowances in the event that the 35,000 allowance cap is not met. Because a number of companies are leaving the industry and the emerging value of allowances has decreased relative to original expectations, some commenters believe that the 35,000 allowance cap will not come into force and that eligible refiners should be able to request additional allowances up to the cap. Furthermore, these commenters believe that such a mechanism would be consistent with Congressional intent to help small diesel refiners. One company proposed several methods by which this "re-capturing" could be accomplished.

Response: Although it is clear that Congress intended this program to help small businesses defray costs that larger companies can more easily justify through economies of scale, EPA was given explicit instruction by Congress to allocate only up to 1500 allowances annually to any one refinery, and EPA may not circumvent the refinery caps or program formulas even in the event of undersubscription. It has been the position of the EPA in all of its rule-makings that the Agency will not allocate any allowances that it has not been given authority to issue. This position was adopted to ensure that the national cap on SO_2 allowances would not be exceeded and actual reductions in SO_2 emissions would be realized. Given these constraints, it is necessary to reject these requests.

I. Summary of Final Rules

a. Part 72 Subpart A—Acid Rain Program General Provisions

Section 72.2 is amended to include definitions for the terms "Desulfurization," "Direct public utility ownership," "Qualifying facility," "Independent power production facility," "Generator output capacity," "Qualifying power purchase commitment," "Power purchase commitment," "Potential electrical output capacity," "Solid waste incinerator," "Planned/installed total net output capacity," and "Small diesel refinery" for the purposes of determining applicability and for the small diesel refineries provisions. Also, the definition for "existing unit" is revised.

The definitions of "power sales agreement," "steam sales agreement," and "utility competitive bid solicitation" are revised to include qualifying facilities and independent power production facilities, as well as new IPPs.

The definition of "simple combustion turbine" is revised to conform to the core rules preamble discussion regarding combined cycle units that have installed auxiliary firing but did not use auxiliary firing during the baseline period, 1985 through 1987, and will not use the auxiliary firing at any time after November 15, 1990.

Section 72.6 is amended to provide applicability requirements for cogenerators, certain qualifying facilities (QFs) and independent power producers (IPPs), and solid waste incineration units. In addition, one paragraph in § 72.6 is added to conform to the preamble of the final core rules, regarding treatment of simple combustion turbines that add auxiliary firing or begin to use auxiliary firing. Also, § 72.6(a)(2) is amended to refer to Tables 2 and 3 of § 73.10.

A new paragraph (c) is added to § 72.6 that provides for certifying officials to apply for determinations of applicability for the Acid Rain Program.

To conform the final core rules to the preamble discussion on simple combustion turbines, a paragraph in § 72.30(b)(2) is also added. Additional paragraphs for § 72.30(b) are added to conform to the new applicability provisions for cogenerators, QFs and IPPs, and solid waste incinerators.

b. Part 73 Subpart A—Background and Summary

A paragraph is added to the purpose statement in § 73.1 to reference the small diesel refinery program.

c. Part 73 Subpart B—Allowance Allocations

Section 73.10(b) is finalized to include allocations for Phase II, paragraph (c) is added to incorporate Table 3 with allocations for section 405(g)(4) units, and paragraph (d) is added to incorporate Table 4 with allocations for section 405(i)(2) units.

Section 73.11 finalizes the procedures for the revising and adjusting of allowance allocations no later than June 1, 1998. Included in this section is the repowering adjustment. This section has been reorganized for clarity.

Section 73.12 describes the procedures for rounding allocations.

Section 73.13 provides the address for submittal of material by the designated representatives and sets out the appeals procedure for the allocations rule.

Section 73.16 finalizes the Phase I early reduction credits program. This provision includes unit eligibility requirements, emissions reduction requirements, initial certification of eligibility procedures, and certification requirements. Additionally, the rule outlines procedures for requesting and being allocated allowances under the provisions of this section.

Section 73.18 provides the eligibility requirements for units commencing operations between January 1, 1993, and December 31, 1995 to receive allowances.

Section 73.19 finalizes the eligibility and application procedures for receipt of allowances by certain units with decreasing SO_2 rates.

Section 73.20 provides for the Phase II early reduction credits program. This proposal includes unit eligibility requirements, emissions reduction requirements, initial certification of eligibility procedures, and certification requirements. Additionally, the rule

outlines procedures for requesting and being allocated allowances under the provisions of this section.

Section 73.26 establishes the conservation and renewable energy reserve.

Section 73.27 establishes the special allowance reserve and provides for the distribution of proceeds and the reallocation of allowances.

d. Part 73 Subpart G—Small Diesel Refineries

Section 73.90 finalizes the small diesel refineries program, which includes refinery eligibility and data submittal requirements, procedures by which refiners may request allowances, and allocation procedures.

e. Part 75

Sections 75.2 Applicability and 75.4 Compliance Dates are revised to conform with and completely refer to the general applicability section, § 72.6.

J. Regulatory Impact Analysis (Executive Order 12291)

A Regulatory Impact Analysis was prepared for the entire Acid Rain Program and made available with the January 11, 1993 core rules. While the core rules were judged to be "major rules," EPA judges this rule to be non-major because it has no specific costs or effect on the economy that have not been accounted for with the core rules. This rule has been submitted to the Office of Management and Budget (OMB) for review prior to publication, as required by E.O. 12291.

K. Regulatory Flexibility Act

The Regulatory Flexibility Act of 1980 requires each federal agency to perform a Regulatory Flexibility Analysis for all rules that are likely to have a "significant impact on a substantial number of small entities." A Regulatory Flexibility Analysis was prepared for the entire Acid Rain Program and made available with the January 11, 1993 core rules. Today's rule does not add any requirements that would burden small entities.

L. Paperwork Reduction Act

The information collection requirements of this rule have been submitted for approval to the Office of Management and Budget (OMB) under the Paperwork Reduction Act, 44 U.S.C. 3501, et seq. An Information Collection Request has been prepared by EPA (ICR No. 1584.04) and a copy may be obtained from Sandy Farmer, Information Policy Branch, EPA, 401 M Street SW., (PM-223Y), Washington, DC, 20460 or by calling (202) 260-2740.

This rule minimizes the reporting burden upon the affected industry. A small reporting burden is placed on the operators of fossil fuel-fired electric utility units which commence operation in the early 1990s. The estimated total burden is 80 hours based on 20 eligible units. The reporting burden is estimated to average 4 hours per response, including time for reviewing instructions, searching existing data sources, gathering and maintaining the data needed, and completing the collection of information.

A small reporting burden is also imposed on the voluntary small diesel refineries program. The estimated total burden is based on 80–85 total potentially eligible refineries. The reporting burden is estimated to be 270 hours for the entire industry, including time for reviewing instructions, searching existing data sources, gathering the data needed, and completing the collection of information.

List of Subjects in 40 CFR Parts 72, 73 and 75

Air pollution control, Compliance plans, Continuous emissions monitoring, Electric utilities, Nitrogen oxides, Permits, Reporting and recordkeeping requirements, Sulfur dioxide.

Dated: March 5, 1993.

Carol M. Browner,

Administrator.

For the reasons set out in the preamble, parts 72, 73, and 75 are amended as set forth below.

PART 72—[AMENDED]

1. The authority citation for part 72 continues to read as follows:

Authority: 42 U.S.C. 7651, et.seq.

2. Section 72.2 is amended by adding the following definitions and by revising the definitions of *existing unit, power sales agreement, simple combustion turbine, steam sales agreement,* and *utility competitive bid solicitation* to read as follows:

§ 72.2 Definitions.

* * * * *

Desulfurization refers to various procedures whereby sulfur is removed from petroleum during or apart from the refining process. "Desulfurization" does not include such processes as dilution or blending of low sulfur content diesel fuel with high sulfur content diesel fuel from a diesel refinery not eligible under 40 CFR part 73, subpart G.

* * * * *

Direct public utility ownership means direct ownership of equipment and facilities by one or more corporations, the principal business of which is sale of electricity to the public at retail. Percentage ownership of such equipment and facilities shall be measured on the basis of book value.

* * * * *

Existing unit means a unit (including a unit subject to section 111 of the Act) that commenced commercial operation before November 15, 1990 and that on or after November 15, 1990 served a generator with nameplate capacity of greater than 25 MWe. "Existing unit" does not include simple combustion turbines or any unit that on or after November 15, 1990 served only generators with a nameplate capacity of 25 MWe or less. Any "existing unit" that is modified, reconstructed, or repowered after November 15, 1990 shall continue to be an "existing unit."

* * * * *

Generator Output capacity means the full-load continuous rating of a generator under specific conditions as designed by the manufacturer.

* * * * *

Independent Power Production Facility (IPP) means a source that:

(1) Is nonrecourse project financed, as defined by the Secretary of Energy at 10 CFR part 715;

(2) Is used for the generation of electricity, eighty percent or more of which is sold at wholesale; but only if direct public utility ownership of the equipment comprising the facility does not exceed 50 percent; and

(3) Is a new unit required to hold allowances under Title IV of the Clean Air Act.

* * * * *

Potential electrical output capacity means the MWe capacity rating for the units which shall be equal to 33 percent of the maximum design heat input capacity of the steam generating unit, as calculated according to appendix D of part 72.

* * * * *

Power purchase commitment means a commitment or obligation of a utility to purchase electric power from a facility pursuant to:

(1) A power sales agreement;

(2) A state regulatory authority order requiring a utility to:

(i) Enter into a power sales agreement with the facility;

(ii) Purchase from the facility; or

(iii) Enter into arbitration concerning the facility for the purpose of establishing terms and conditions of the utility's purchase of power;

(3) A letter of intent or similar instrument committing to purchase power (actual electrical output or generator output capacity) from the source at a previously offered or lower price and a power sales agreement applicable to the source is executed within the time frame established by the terms of the letter of intent but no later than November 15, 1992 or, where the letter of intent does not specify a timeframe, a power sales agreement applicable to the source is executed on or before November 15, 1992; or

(4) A utility competitive bid solicitation that has resulted in the selection of the qualifying facility or independent power production facility as the winning bidder.

Power sales agreement is a legally binding agreement between a QF, IPP, new IPP, or firm associated with such facility and a regulated electric utility that establishes the terms and conditions for the sale of power from the facility to the utility.

* * * * *

Qualifying facility (QF) means a "qualifying small power production facility" within the meaning of section 3(17)(C) of the Federal Power Act or a "qualifying cogeneration facility" within the meaning of section 3(18)(B) of the Federal Power Act.

* * * * *

Qualifying power purchase commitment means a power purchase commitment in effect as of November 15, 1990 without regard to changes to that commitment so long as:

(1) The identity of the electric output purchaser; or

(2) The identity of the steam purchaser and the location of the facility, remain unchanged as of the date the facility commences commercial operation; and

(3) The terms and conditions of the power purchase commitment are not changed in such a way as to allow the costs of compliance with the Acid Rain Program to be shifted to the purchaser.

* * * * *

Simple combustion turbine means a unit that is a rotary engine driven by a gas under pressure that is created by the combustion of any fuel. This term includes combined cycle units without auxiliary firing. This term excludes combined cycle units with auxiliary firing, unless the unit did not use the auxiliary firing from 1985 through 1987 and does not use auxiliary firing at any time after November 15, 1990.

* * * * *

Small Diesel Refinery means a domestic motor diesel fuel refinery or portion of a refinery that, as an annual average of calendar years 1988 through 1990 and as reported to the Department of Energy on Form 810, had bona fide crude oil throughput less than 18,250,000 barrels per year, and the refinery or portion of a refinery is owned or controlled by a refiner with a total combined bona fide crude oil throughput of less than 50,187,500 barrels per year.

* * * * *

Solid Waste Incinerator means a source as defined in section 129(g)(1) of the Act.

* * * * *

Steam sales agreement is a legally binding agreement between a QF, IPP, new IPP, or firm associated with such facility and an industrial or commercial establishment requiring steam that establishes the terms and conditions under which the facility will supply steam to the establishment.

* * * * *

Total planned net output capacity means the planned generator output capacity, excluding that portion of the electrical power which is designed to be used at the power production facility, as specified under one or more qualifying power purchase commitments or contemporaneous documents as of November 15, 1990; "Total installed net output capacity" shall be the generator output capacity, excluding that portion of the electrical power actually used at the power production facility, as installed.

* * * * *

Utility competitive bid solicitation is a public request from a regulated utility for offers to the utility for meeting future generating needs. A qualifying facility, independent power production facility, or new IPP may be regarded as having been "selected" in such solicitation if the utility has named the facility as a project with which the utility intends to negotiate a power sales agreement.

* * * * *

3. Section 72.6 is amended by revising paragraph (a)(2) and by adding paragraphs (a)(3) (iii) through (vii), (b)(4), (b)(5), (b)(6), (b)(7), and (c) to read as follows):

§ 72.6 Applicability.

(a) * * *

(2) A unit that is listed in Table 2 or 3 of § 73.10 of this chapter and any other existing utility unit, except a unit under paragraph (b) of this section.

(3) * * *

(iii) Was a simple combustion turbine on November 15, 1990 but adds or uses auxiliary firing after November 15, 1990;

(iv) Was an exempt cogeneration facility under paragraph (b)(4) of this section but during any three calendar year period after November 15, 1990 sold, to a utility power distribution system, an annual average of more than one-third of its potential electrical output capacity and more than 219,000 MWe-hrs electric output, on a gross basis;

(v) Was an exempt qualifying facility under paragraph (b)(5) of this section but, at any time after the later of November 15, 1990 or the date the facility commences commercial operation, fails to meet the definition of qualifying facility;

(vi) Was an exempt IPP under paragraph (b)(6) of this section but, at any time after the later of November 15, 1990 or the date the facility commences commercial operation, fails to meet the definition of independent power production facility; or

(vii) Was an exempt solid waste incinerator under paragraph (b)(7) of this section but during any three calendar year period after November 15, 1990 consumes 20 percent or more (on a Btu basis) fossil fuel.

(b) * * *

(4) A cogeneration facility which:

(i) For a unit that commenced construction on or prior to November 15, 1990, was constructed for the purpose of supplying equal to or less than one-third its potential electrical output capacity or equal to or less than 219,000 MWe-hrs actual electric output on an annual basis to any utility power distribution system for sale (on a gross basis). If the purpose of construction is not known, the Administrator will presume that actual operation from 1985 through 1987 is consistent with such purpose. However, if in any three calendar year period after November 15, 1990, such unit sells to a utility power distribution system an annual average of more than one-third of its potential electrical output capacity and more than 219,000 MWe-hrs actual electric output (on a gross basis), that unit shall be an affected unit, subject to the requirements of the Acid Rain Program; or

(ii) For units which commenced construction after November 15, 1990, supplies equal to or less than one-third its potential electrical output capacity or equal to or less than 219,000 MWe-hrs actual electric output on an annual basis to any utility power distribution system for sale (on a gross basis). However, if in any three calendar year period after November 15, 1990, such unit sells to a utility power distribution system an annual average of more than one-third of its potential electrical output capacity and more than 219,000 MWe-hrs actual electric output (on a gross basis), that

unit shall be an affected unit, subject to the requirements of the Acid Rain Program.

(5) A qualifying facility that:

(i) Has, as of November 15, 1990, one or more qualifying power purchase commitments to sell at least 15 percent of its total planned net output capacity; and

(ii) Consists of one or more units designated by the owner or operator with total installed net output capacity not exceeding 130 percent of the total planned net output capacity. If the emissions rates of the units are not the same, the Administrator may exercise discretion to designate which units are exempt.

(6) An independent power production facility that:

(i) Has, as of November 15, 1990, one or more qualifying power purchase commitments to sell at least 15 percent of its total planned net output capacity; and

(ii) Consists of one or more units designated by the owner or operator with total installed net output capacity not exceeding 130 percent of its total planned net output capacity. If the emissions rates of the units are not the same, the Administrator may exercise discretion to designate which units are exempt.

(7) A solid waste incinerator, if more than 80 percent (on a Btu basis) of the annual fuel consumed at such incinerator is other than fossil fuels. For solid waste incinerators which began operation before January 1, 1985, the average annual fuel consumption of non-fossil fuels for calendar years 1985 through 1987 must be greater than 80 percent for such an incinerator to be exempt. For solid waste incinerators which began operation after January 1, 1985, the average annual fuel consumption of non-fossil fuels for the first three years of operation must be greater than 80 percent for such an incinerator to be exempt, If, during any three calendar year period after November 15, 1990, such incinerator consumes 20 percent or more (on a Btu basis) fossil fuel, such incinerator will be an affected source under the Acid Rain Program.

* * * * *

(c) A certifying official of any unit may petition the Administrator for a determination of applicability under this section.

(1) *Petition Content.* The petition shall be in writing and include identification of the unit and relevant and appropriate facts about the unit. The petition shall meet the requirements of § 72.21. In accordance with § 72.21(d), the certifying official shall provide each owner or operator of the unit, facility, or source with a copy of the petition and a copy of the Administrator's response.

(2) *Timing.* The petition shall be submitted to the Administrator prior to the issuance (including renewal) of a Phase II Acid Rain permit for the unit as a final agency action.

(3) *Submission.* All submittals under this section shall be made by the certifying official to the Director, Acid Rain Division, (6204J), 401 M Street, SW., Washington, DC, 20460.

(4) *Response.* The Administrator will issue a written response based upon the factual submittal meeting the requirements of paragraph (c)(1) of this section.

(5) *Administrative Appeals.* The Administrator's determination of applicability is a decision appealable under 40 CFR part 78 of this chapter.

(6) *Effect of Determination.* The Administrator's determination of applicability shall be binding upon the permitting authority, unless the petition is found to have contained significant errors or omissions.

4. In § 72.30 paragraphs 72.30(b)(2)(iv) through (viii) are added to read as follows:

§ 72.30 Requirements to apply.

* * * * *

(b) * * *

(2) * * *

(iv) For any source with a unit under § 72.6(a)(3)(iii), the designated representative shall submit a complete Acid Rain permit application governing such unit to the permitting authority at least 24 months before the later of January 1, 2000 or the date on which the auxiliary firing commences operation.

(v) For any source with a unit under § 72.6(a)(3)(iv), the designated representative shall submit a complete Acid Rain permit application governing such unit to the permitting authority before the later of January 1, 1998 or March 1 of the year following the three calendar year period in which the unit sold to a utility power distribution system an annual average of more than one-third of its potential electrical output capacity and more than 219,000 MWe-hrs actual electric output (on a gross basis).

(vi) For any source with a unit under § 72.6(a)(3)(v), the designated representative shall submit a complete Acid Rain permit application governing such unit to the permitting authority before the later of January 1, 1998 or March 1 of the year following the calendar year in which the facility fails to meet the definition of qualifying facility.

(vii) For any source with a unit under § 72.6(a)(3)(vi), the designated representative shall submit a complete Acid Rain permit application governing such unit to the permitting authority before the later of January 1, 1998 or March 1 of the year following the calendar year in which the facility fails to meet the definition of an independent power production facility.

(viii) For any source with a unit under § 72.6(a)(3)(vii), the designated representative shall submit a complete Acid Rain permit application governing such unit to the permitting authority before the later of January 1, 1998 or March 1 of the year following the three calendar year period in which the incinerator consumed 20 percent or more fossil fuel (on a Btu basis).

* * * * *

5. Section 72.44 is amended by revising paragraphs (f)(3) (i) and (ii) and the second sentence of paragraph (g)(1)(ii) to read as follows:

§ 72.44 Phase II repowering extensions.

* * * * *

(f) * * *

(3) * * *

(i) To the existing unit under the approved plan, in accordance with § 73.21 of this chapter during the repowering extension under paragraph (f)(2)(ii) of this section; and

(ii) To the existing unit under the approved plan under paragraph (b)(1) of this section or, in lieu of any further allocations to the existing unit, to the new unit under the approved plan under paragraph (b)(2) of this section, in accordance with § 73.21 of this chapter, after the repowering extension under paragraph (f)(2)(ii) of this section ends.

(g) * * *

(1) * * *

(ii) * * * The Administrator will deduct allowances (including a pro rata deduction for any fraction of a year) from the Allowance Tracking System account of the existing unit to the extent necessary to ensure that, beginning the day after the extension ends, allowances are allocated in accordance with § 73.21(c)(1) of this chapter.

* * * * *

6. Appendix D of part 72 is added to read as follows:

Appendix D to Part 72—Calculation of Potential Electric Output Capacity

The potential electrical output capacity is calculated from the maximum design heat input from the boiler by the following equation:

$$\frac{\text{max. design heat input}}{3} \times \frac{\times 1 \text{ kw-hr}}{3413 \text{ Btu}} \times \frac{\times 1 \text{ MWe}}{1000 \text{ Kw}}$$

For example:

(1) Assume a boiler with a maximum design heat input capacity of 340 million Btu/hr.

(2) One-third of the maximum design heat input capacity is 113.3 mmBtu/hr. The one-third factor relates to the thermodynamic efficiency of the boiler.

(3) To express this in MWe, the standards conversion of 3413 Btu to 1 kw-hr is used: 113.3×10^6 Btu/hr×1 kw-hr / 3413 Btu×1 MWe / 1000 kw=33.2 MWe

PART 73—[AMENDED]

7. The authority citation for part 73 continues to read as follows:

Authority: 42 U.S.C. 7651, et. seq.

8. Section 73.1 is amended by adding paragraph (f) to read as follows:

§ 73.1 Purpose.

* * * * *

(f) The application for, and distribution of, allowances for desulfurization of fuel by small diesel refineries.

§ 73.72 [Amended]

9. Section 73.72 is amended by redesignating Table 2 as Table 1.

10. Subpart B of part 73 is amended by adding § 73.10 (b), (c), and (d), §§ 73.11 through 73.13, § 73.16, §§ 73.18 through 73.21, § 73.26, and § 73.27 (a) (2) and (3), (b) (2) through (5), and (c) (2) through (5) to read as set forth below. The table of contents for subpart B, as mended, is set forth below for the convenience of the reader.

Subpart B—Allowance Allocations

Sec.
73.10 Initial allocations for phase I and II.
73.11 Revision of allocations.
73.12 Rounding procedures.
73.13 Procedures for submittals.
73.14 [Reserved]
73.15 [Reserved]
73.16 Phase I early reduction credits.
73.17 [Reserved]
73.18 Submittal procedures for units commencing commercial operation during the Period from January 1, 1993 through December 31, 1995.
73.19 Certain units with declining SO_2 rates.
73.20 Phase II early reduction credits.
73.21 Phase II repowering allowances.
73.22 [Reserved]
73.23 [Reserved]
73.24 [Reserved]
73.25 Phase I extension reserve.
73.26 Conservation and renewable energy reserve.
73.27 Special allowance reserve.

Subpart B—Allowance Allocations

§ 73.10 Initial allocations for phases I and II.

* * * * *

(b) *Phase II Allowances.* (1) The Administrator will allocate allowances to the unit account for each unit listed in Table 2 of this section in the amount specified in Table 2 Column E to be held in the future year subaccounts representing calendar years 2000 through 2009, except that units listed in both Table 2 and 4 will be allocated allowances as specified in Table 4 Column C, multiplied by .9011, reduced by 1.3185 times Table 2 Column B, and increased by Table 2 Columns C and D.

(2) The Administrator will allocate allowances to the unit account for each unit listed in Table 2 of this section in the amount specified in Table 2 Column I to be held in the future year subaccounts representing calendar years 2010 and each year thereafter, except that units listed in both Table 2 and 4 will be allocated allowances as specified in Table 4 Column F, multiplied by .8987, reduced by Table 2 Column G, and increased by Table 2 Column H.

BILLING CODE 6560-50-M

TABLE 2. -- PHASE II ALLOWANCE ALLOCATIONS

State	Plant Name	Boiler [1]	Allowances for years 2000–2009					Allowances for years 2010 and thereafter			
			(A) [2] Unadjusted basic	(B) Special allowance reserve deduction	(C) Additional basic (§405(a)(3))	(D) Total Bonus	(E) [3] Total annual phase II	(F) [2] Unadjusted basic	(G) Special allowance reserve deduction	(H) Additional basic (§ 405(a)(3))	(I) [4] Total annual phase II
Alabama	Barry	1	4,437	112	0	0	3,851	4,437	112	0	3,876
Alabama	Barry	2	4,904	124	0	0	4,255	4,904	124	0	4,283
Alabama	Barry	3	10,069	255	0	0	8,738	10,069	254	0	8,795
Alabama	Barry	4	11,486	291	0	0	9,966	11,486	290	0	10,033
Alabama	Barry	5	28,381	716	0	0	24,625	28,381	716	0	24,790
Alabama	Charles R Lowman	1	1,350	34	0	671	1,843	1,350	34	0	1,179
Alabama	Charles R Lowman	2	8,028	203	0	0	6,966	8,028	203	0	7,012
Alabama	Charles R Lowman	3	6,737	171	0	0	5,846	6,737	170	0	5,885
Alabama	Chickasaw	110	126	3	0	0	110	126	3	0	110
Alabama	Colbert	1	6,515	165	152	0	5,805	6,515	164	152	5,843
Alabama	Colbert	2	7,348	186	171	0	6,548	7,348	186	171	6,589
Alabama	Colbert	3	7,393	187	172	0	6,588	7,393	187	172	6,629
Alabama	Colbert	4	7,399	187	172	0	6,593	7,399	187	172	6,635
Alabama	Colbert	5	17,846	452	415	0	15,901	17,846	451	415	16,002
Alabama	E C Gaston	1	8,687	220	202	0	7,740	8,687	219	202	7,790
Alabama	E C Gaston	2	8,900	225	207	0	7,930	8,900	225	207	7,981
Alabama	E C Gaston	3	8,789	222	205	0	7,832	8,789	222	205	7,882
Alabama	E C Gaston	4	9,254	234	215	0	8,245	9,254	234	215	8,296
Alabama	E C Gaston	5	28,724	726	669	0	25,591	28,724	726	669	25,758
Alabama	Future Fossil	**1	0	0	0	0	0	0	0	0	0
Alabama	Gadsden	1	2,237	57	0	0	1,941	2,237	56	0	1,954
Alabama	Gadsden	2	2,313	59	0	0	2,006	2,313	58	0	2,021
Alabama	Gorgas	5	1,427	36	0	507	1,746	1,427	36	0	1,246
Alabama	Gorgas	6	2,547	64	0	808	3,016	2,547	64	0	2,225
Alabama	Gorgas	7	2,852	72	0	643	3,116	2,852	72	0	2,491
Alabama	Gorgas	8	5,369	136	0	80	4,719	5,369	136	0	4,689
Alabama	Gorgas	9	5,307	134	0	103	4,708	5,307	134	0	4,635
Alabama	Gorgas	10	25,647	649	0	0	22,252	25,647	647	0	22,402
Alabama	Greene County	1	9,699	246	0	0	8,416	9,699	245	0	8,472
Alabama	Greene County	2	9,054	229	0	0	7,856	9,054	229	0	7,908
Alabama	James H Miller Jr	1	13,827	350	0	2,117	14,115	13,827	349	0	12,077
Alabama	James H Miller Jr	2	20,304	514	0	0	17,618	20,304	513	0	17,734
Alabama	James H Miller Jr	3	19,908	504	0	0	17,275	19,908	503	0	17,389
Alabama	James H Miller Jr	4	9,197	233	0	0	7,980	9,197	232	0	8,033
Alabama	Mcintosh–Caes	**1	1,071	27	0	0	930	1,071	27	0	936
Alabama	Mcintosh–Caes	**2	0	0	0	0	0	0	0	0	0
Alabama	Mcwilliams	**CT1	0	0	0	0	0	0	0	0	0
Alabama	Mcwilliams	**CT2	0	0	0	0	0	0	0	0	0
Alabama	Mcwilliams	**CT3	0	0	0	0	0	0	0	0	0
Alabama	Widows Creek	1	2,757	70	0	927	3,319	2,757	70	0	2,406
Alabama	Widows Creek	2	2,416	61	0	1,097	3,194	2,416	61	0	2,110
Alabama	Widows Creek	3	2,803	71	0	903	3,335	2,803	71	0	2,448
Alabama	Widows Creek	4	3,064	78	0	773	3,431	3,064	77	0	2,677
Alabama	Widows Creek	5	3,360	85	0	624	3,540	3,360	85	0	2,935
Alabama	Widows Creek	6	2,601	66	0	1,003	3,260	2,601	66	0	2,272
Alabama	Widows Creek	7	6,357	161	0	2,241	7,757	6,357	160	0	5,553
Alabama	Widows Creek	8	6,035	153	0	2,178	7,414	6,035	152	0	5,272

TABLE 2. -- PHASE II ALLOWANCE ALLOCATIONS

State	Plant Name	Boiler [1]	Allowances for years 2000–2009					Allowances for years 2010 and thereafter			
			(A) [2] Unadjusted basic	(B) Special allowance reserve deduction	(C) Additional basic (§405(a)(3))	(D) Total Bonus	(E) [3] Total annual phase II	(F) [2] Unadjusted basic	(G) Special allowance reserve deduction	(H) Additional basic (§ 405(a)(3))	(I) [4] Total annual phase II
Arizona	Agua Fria	1	1	0	0	53	54	39	1	0	34
Arizona	Agua Fria	2	1	0	0	64	65	44	1	0	39
Arizona	Agua Fria	3	1	0	0	76	77	77	2	0	67
Arizona	Apache Station	1	379	10	0	0	329	379	10	0	331
Arizona	Apache Station	2	1,620	41	0	191	1,597	1,620	41	0	1,415
Arizona	Apache Station	3	3,235	82	0	160	2,987	3,235	82	0	2,825
Arizona	Cholla	1	2,321	59	0	192	2,206	2,321	59	0	2,027
Arizona	Cholla	2	5,779	146	0	366	5,401	5,779	146	0	5,048
Arizona	Cholla	3	5,541	140	0	298	5,106	5,541	140	0	4,840
Arizona	Cholla	4	6,879	225	0	562	6,266	6,879	224	0	7,756
Arizona	Cholla	**5	0	0	0	0	0	0	0	0	0
Arizona	Coronado	U1B	5,930	150	0	544	5,690	5,930	150	0	5,179
Arizona	Coronado	U2B	6,234	156	0	447	5,856	6,234	157	0	5,446
Arizona	De Moss Petrie	4	0	0	0	0	0	0	0	0	0
Arizona	Gila Bend	**GT1	0	0	0	0	0	0	0	0	0
Arizona	Gila Bend	**GT2	0	0	0	0	0	0	0	0	0
Arizona	Gila Bend	**GT3	0	0	0	0	0	0	0	0	0
Arizona	Gila Bend	**GT4	0	0	0	0	0	0	0	0	0
Arizona	Irvington	1	0	0	0	16	16	15	0	0	13
Arizona	Irvington	2	1	0	0	27	28	45	1	0	39
Arizona	Irvington	3	0	0	0	0	0	2	0	0	2
Arizona	Irvington	4	3,200	81	0	84	2,831	3,200	81	0	2,795
Arizona	Kyrene	K-1	6	0	0	2	7	8	0	0	7
Arizona	Kyrene	K-2	8	0	0	11	16	18	0	0	16
Arizona	Navajo	1	28,462	721	0	1,314	26,009	28,462	719	0	24,880
Arizona	Navajo	2	26,641	674	0	947	24,062	26,641	673	0	23,270
Arizona	Navajo	3	27,028	684	0	1,389	24,840	27,028	682	0	23,608
Arizona	Ocotillo	1	10	0	0	47	56	46	1	0	40
Arizona	Ocotillo	2	113	3	0	32	130	147	4	0	126
Arizona	Saguaro	1	215	5	0	16	203	215	5	0	186
Arizona	Saguaro	2	5	0	0	19	24	26	1	0	22
Arizona	Springerville	1	6,957	176	0	476	6,515	6,957	176	0	6,076
Arizona	Springerville	2	6,577	166	0	0	5,706	6,577	166	0	5,745
Arizona	West Phoenix	4	8	0	0	4	11	10	0	0	9
Arizona	West Phoenix	6	14	0	0	9	22	17	0	0	15
Arizona	Yuma Axis	1	1	0	0	41	42	45	1	0	39
Arkansas	Carl Bailey	01	9	0	0	2	10	9	0	0	8
Arkansas	Cecil Lynch	1	0	0	0	0	0	0	0	0	0
Arkansas	Cecil Lynch	2	0	0	0	0	0	0	0	0	0
Arkansas	Cecil Lynch	3	0	0	0	3	3	0	0	0	0
Arkansas	Flint Creek	1	16,604	420	0	661	15,069	16,604	419	0	14,503
Arkansas	Hamilton Moses	1	0	0	0	0	0	0	0	0	0
Arkansas	Hamilton Moses	2	0	0	0	0	0	0	0	0	0
Arkansas	Harvey Couch	1	0	0	0	7	7	3	0	0	3
Arkansas	Harvey Couch	2	9	0	0	103	111	129	3	0	113
Arkansas	Independence	1	19,533	494	0	1,061	18,011	19,533	493	0	17,062
Arkansas	Independence	2	19,554	495	0	1,289	18,287	19,554	494	0	17,079

TABLE 2. -- PHASE II ALLOWANCE ALLOCATIONS

State	Plant Name	Boiler [1]	Allowances for years 2000–2009					Allowances for years 2010 and thereafter			
			(A) [2] Unadjusted basic	(B) Special allowance reserve deduction	(C) Additional basic (§405(a)(3))	(D) Total Bonus	(E) [3] Total annual phase II	(F) [2] Unadjusted basic	(G) Special allowance reserve deduction	(H) Additional basic (§ 405(a)(3))	(I) [4] Total annual phase II
Arkansas	Lake Catherine	1	0	0	0	0	0	0	0	0	0
Arkansas	Lake Catherine	2	0	0	0	0	0	0	0	0	0
Arkansas	Lake Catherine	3	4	0	0	4	8	7	0	0	8
Arkansas	Lake Catherine	4	130	3	0	42	155	385	10	0	336
Arkansas	Mcclellan	01	14	0	0	2	15	14	0	0	13
Arkansas	Na 2 -- 7246	**1	0	0	0	0	0	0	0	0	0
Arkansas	Robert E Ritchie	1	7	0	0	47	53	76	2	0	66
Arkansas	Robert E Ritchie	2	2,439	62	0	13	2,130	2,439	62	0	2,130
Arkansas	Thomas Fitzhugh	1	0	0	0	1	1	1	0	0	1
Arkansas	White Bluff	1	22,946	581	0	859	20,768	22,946	579	0	20,043
Arkansas	White Bluff	2	26,304	666	0	881	23,703	26,304	664	0	22,976
California	Alamitos	1	3,083	78	0	76	2,751	3,083	78	0	2,693
California	Alamitos	2	3	0	0	102	105	19	0	0	17
California	Alamitos	3	15	0	0	276	290	92	2	0	81
California	Alamitos	4	618	16	0	276	814	618	16	0	539
California	Alamitos	5	4,410	112	0	366	4,193	4,410	111	0	3,852
California	Alamitos	6	1,068	27	0	549	1,476	1,068	27	0	933
California	Avon	1	0	0	0	17	17	15	0	0	13
California	Avon	2	0	0	0	0	0	16	0	0	14
California	Avon	3	0	0	0	0	0	16	0	0	14
California	Broadway	B1	142	4	0	3	126	142	4	0	124
California	Broadway	B2	176	4	0	10	163	176	4	0	154
California	Broadway	B3	12	0	0	63	74	81	2	0	71
California	Contra Costa	1	1	0	0	124	125	17	0	0	14
California	Contra Costa	2	2	0	0	0	2	26	0	0	23
California	Contra Costa	3	0	0	0	0	0	23	0	0	20
California	Contra Costa	4	0	0	0	0	0	16	0	0	14
California	Contra Costa	5	0	0	0	0	0	17	0	0	14
California	Contra Costa	6	0	0	0	0	0	14	0	0	13
California	Contra Costa	7	3	0	0	25	26	32	1	0	28
California	Contra Costa	8	1	0	0	52	53	46	1	0	40
California	Contra Costa	9	20	1	0	339	356	346	9	0	302
California	Contra Costa	10	4,536	115	0	315	4,252	4,536	115	0	3,963
California	Cool Water	1	2	0	0	8	10	12	0	0	11
California	Cool Water	2	1	0	0	5	6	9	0	0	8
California	El Centro	2	312	8	0	15	285	312	8	0	272
California	El Centro	3	661	17	0	36	610	661	17	0	577
California	El Centro	4	639	16	0	27	582	639	16	0	556
California	El Segundo	1	407	10	0	83	437	407	10	0	356
California	El Segundo	2	13	0	0	78	90	71	2	0	62
California	El Segundo	3	35	1	0	151	182	195	5	0	170
California	El Segundo	4	74	2	0	305	370	414	10	0	362
California	Encina	1	509	13	0	48	487	509	13	0	444
California	Encina	2	1,188	30	0	92	1,123	1,188	30	0	1,036
California	Encina	3	776	20	0	58	731	776	20	0	677
California	Encina	4	2,071	52	0	134	1,932	2,071	52	0	1,809
California	Encina	5	2,736	69	0	100	2,474	2,736	69	0	2,390

TABLE 2. -- PHASE II ALLOWANCE ALLOCATIONS

State	Plant Name	Boiler [1]	Allowances for years 2000–2009					Allowances for years 2010 and thereafter			
			(A) [2] Unadjusted basic	(B) Special allowance reserve deduction	(C) Additional basic (§405(a)(3))	(D) Total Bonus	(E) [3] Total annual phase II	(F) [2] Unadjusted basic	(G) Special allowance reserve deduction	(H) Additional basic (§ 405(a)(3))	(I) [4] Total annual phase II
California	Etiwanda	1	107	3	0	23	115	107	3	0	93
California	Etiwanda	2	3	0	0	26	29	20	1	0	17
California	Etiwanda	3	1,334	34	0	205	1,362	1,334	34	0	1,165
California	Etiwanda	4	53	1	0	214	261	309	8	0	270
California	Glenarm	16	0	0	0	0	0	0	0	0	0
California	Glenarm	17	0	0	0	0	0	0	0	0	0
California	Grayson	4	100	3	0	15	101	100	3	0	87
California	Grayson	5	26	1	0	14	38	46	1	0	42
California	Harbor Gen Station	1	70	2	0	7	68	70	2	0	61
California	Harbor Gen Station	2	122	3	0	14	120	122	3	0	107
California	Harbor Gen Station	3	98	2	0	8	94	98	2	0	86
California	Harbor Gen Station	4	112	3	0	6	103	112	3	0	96
California	Harbor Gen Station	5	175	4	0	18	170	175	4	0	153
California	Haynes Gen Station	1	652	17	0	111	677	652	16	0	570
California	Haynes Gen Station	2	374	9	0	10	335	374	9	0	327
California	Haynes Gen Station	3	1,291	33	0	115	1,234	1,291	33	0	1,127
California	Haynes Gen Station	4	971	25	0	152	994	971	25	0	848
California	Haynes Gen Station	5	1,375	35	0	198	1,391	1,375	35	0	1,201
California	Haynes Gen Station	6	1,449	37	0	258	1,516	1,449	37	0	1,265
California	Highgrove	1	3	0	0	1	4	3	0	0	3
California	Highgrove	2	0	0	0	1	1	0	0	0	0
California	Highgrove	3	0	0	0	1	1	1	0	0	1
California	Highgrove	4	1	0	0	2	3	3	0	0	3
California	Humboldt Bay	1	389	10	0	16	356	389	10	0	340
California	Humboldt Bay	2	2	0	0	22	24	30	1	0	28
California	Hunters Point	3	5	0	0	71	76	53	1	0	47
California	Hunters Point	4	5	0	0	0	5	54	1	0	48
California	Hunters Point	5	2	0	0	72	74	46	1	0	42
California	Hunters Point	6	1	0	0	0	1	42	1	0	37
California	Hunters Point	7	9	0	0	184	192	194	5	0	169
California	Huntington Beach	1	1,315	33	0	173	1,314	1,315	33	0	1,149
California	Huntington Beach	2	1,108	28	0	166	1,126	1,108	28	0	966
California	Huntington Beach	3	23	1	0	141	161	71	2	0	62
California	Huntington Beach	4	28	1	0	152	176	87	2	0	76
California	Kern	1	0	0	0	3	3	2	0	0	2
California	Kern	2	0	0	0	0	0	3	0	0	3
California	Kern	3	0	0	0	13	13	3	0	0	3
California	Kern	4	0	0	0	0	0	3	0	0	3
California	Magnolia	M4	38	1	0	4	37	36	1	0	33
California	Mandalay	1	1,321	33	0	223	1,369	1,321	33	0	1,154
California	Mandalay	2	1,243	31	0	204	1,283	1,243	31	0	1,086
California	Martinez	1	1	0	0	0	1	1	0	0	1
California	Martinez	2	1	0	0	0	1	1	0	0	1
California	Martinez	3	1	0	0	0	1	1	0	0	1
California	Morro Bay	1	1,609	41	0	153	1,549	1,609	41	0	1,405
California	Morro Bay	2	4	0	0	135	139	112	3	0	96
California	Morro Bay	3	3,968	101	0	332	3,793	3,968	101	0	3,483

TABLE 2. -- PHASE II ALLOWANCE ALLOCATIONS

State	Plant Name	Boiler [1]	Allowances for years 2000–2009					Allowances for years 2010 and thereafter			
			(A) [2] Unadjusted basic	(B) Special allowance reserve deduction	(C) Additional basic (§405(a)(3))	(D) Total Bonus	(E) [3] Total annual phase II	(F) [2] Unadjusted basic	(G) Special allowance reserve deduction	(H) Additional basic (§ 405(a)(3))	(I) [4] Total annual phase II
California	Morro Bay	4	3,289	83	0	173	3,027	3,289	83	0	2,873
California	Moss Landing	1	0	0	0	121	121	16	0	0	16
California	Moss Landing	2	0	0	0	0	0	16	0	0	15
California	Moss Landing	3	0	0	0	0	0	21	0	0	18
California	Moss Landing	4	0	0	0	0	0	23	0	0	20
California	Moss Landing	5	0	0	0	0	0	22	0	0	19
California	Moss Landing	6	0	0	0	0	0	15	0	0	14
California	Moss Landing	7	5	0	0	74	79	59	1	0	52
California	Moss Landing	8	497	13	0	32	462	497	13	0	434
California	Moss Landing	6–1	9,268	235	0	812	8,854	9,268	234	0	8,085
California	Moss Landing	7–1	68	2	0	916	975	792	20	0	692
California	Oleum	1	140	4	0	24	148	140	4	0	122
California	Oleum	2	158	4	0	0	138	158	4	0	138
California	Oleum	3	278	8	0	0	240	278	8	0	242
California	Oleum	4	116	2	0	0	102	116	2	0	102
California	Oleum	5	200	6	0	0	172	200	6	0	174
California	Oleum	6	232	6	0	0	202	232	6	0	202
California	Olive	01	137	3	0	12	131	137	3	0	120
California	Olive	02	10	0	0	16	25	53	1	0	47
California	Ormond Beach	1	4,317	109	0	742	4,488	4,317	109	0	3,771
California	Ormond Beach	2	4,668	118	0	500	4,550	4,668	118	0	4,077
California	Pittsburg	1	1,704	43	0	149	1,628	1,704	43	0	1,488
California	Pittsburg	2	1,401	35	0	124	1,340	1,401	35	0	1,224
California	Pittsburg	3	1,648	42	0	145	1,573	1,646	42	0	1,437
California	Pittsburg	4	1,658	42	0	132	1,569	1,656	42	0	1,446
California	Pittsburg	5	10	0	0	276	285	326	8	0	287
California	Pittsburg	6	4,081	103	0	183	3,725	4,081	103	0	3,565
California	Pittsburg	7	26	1	0	718	740	713	16	0	623
California	Potrero	3–1	16	0	0	307	321	304	8	0	285
California	Redondo Beach	5	13	0	0	68	80	144	4	0	125
California	Redondo Beach	6	11	0	0	95	105	117	3	0	102
California	Redondo Beach	7	49	1	0	511	554	551	14	0	481
California	Redondo Beach	8	50	1	0	552	596	565	14	0	494
California	Redondo Beach	11	0	0	0	36	36	4	0	0	4
California	Redondo Beach	12	0	0	0	0	0	2	0	0	2
California	Redondo Beach	13	0	0	0	0	0	4	0	0	4
California	Redondo Beach	14	0	0	0	0	0	4	0	0	4
California	Redondo Beach	15	0	0	0	0	0	3	0	0	3
California	Redondo Beach	16	0	0	0	0	0	5	0	0	5
California	Redondo Beach	17	0	0	0	0	0	6	0	0	6
California	San Bernardino	1	120	3	0	13	117	120	3	0	105
California	San Bernardino	2	7	0	0	11	17	22	1	0	19
California	Scattergood Gen Sta	1	732	19	0	112	747	732	18	0	640
California	Scattergood Gen Sta	2	652	17	0	88	654	652	16	0	570
California	Scattergood Gen Sta	3	4	0	0	258	262	285	7	0	249
California	Silver Gate	1	0	0	0	0	0	0	0	0	0
California	Silver Gate	2	0	0	0	0	0	0	0	0	0

TABLE 2. -- PHASE II ALLOWANCE ALLOCATIONS

State	Plant Name	Boiler [1]	Allowances for years 2000–2009					Allowances for years 2010 and thereafter			
			(A) [2] Unadjusted basic	(B) Special allowance reserve deduction	(C) Additional basic (§405(a)(3))	(D) Total Bonus	(E) [3] Total annual phase II	(F) [2] Unadjusted basic	(G) Special allowance reserve deduction	(H) Additional basic (§ 405(a)(3))	(I) [4] Total annual phase II
California	Silver Gate	3	0	0	0	0	0	0	0	0	0
California	Silver Gate	4	0	0	0	0	0	0	0	0	0
California	Silver Gate	5	0	0	0	0	0	0	0	0	0
California	Silver Gate	6	0	0	0	0	0	0	0	0	0
California	South Bay	1	2,627	66	0	193	2,473	2,627	66	0	2,295
California	South Bay	2	1,920	49	0	95	1,760	1,920	48	0	1,678
California	South Bay	3	2,309	58	0	157	2,161	2,309	58	0	2,017
California	South Bay	4	632	16	0	50	599	632	16	0	552
California	Valley Gen Station	1	115	3	0	21	121	115	3	0	100
California	Valley Gen Station	2	136	3	0	21	140	136	3	0	119
California	Valley Gen Station	3	444	11	0	0	388	444	11	0	388
California	Valley Gen Station	4	337	9	0	57	349	337	9	0	294
Colorado	Arapahoe	1	237	6	0	14	220	237	6	0	207
Colorado	Arapahoe	2	262	7	0	16	245	262	7	0	228
Colorado	Arapahoe	3	196	5	0	10	180	196	5	0	171
Colorado	Arapahoe	4	2,086	53	0	101	1,911	2,086	53	0	1,822
Colorado	Cameo	2	972	25	0	54	897	972	25	0	849
Colorado	Cherokee	1	2,322	59	0	108	2,120	2,322	59	0	2,028
Colorado	Cherokee	2	3,105	79	0	119	2,813	3,105	78	0	2,713
Colorado	Cherokee	3	4,063	103	0	205	3,730	4,063	103	0	3,548
Colorado	Cherokee	4	8,135	206	0	416	7,475	8,135	205	0	7,106
Colorado	Comanche	1	8,399	213	0	348	7,835	8,399	212	0	7,336
Colorado	Comanche	2	7,357	186	0	478	6,861	7,357	186	0	6,426
Colorado	Craig	C1	8,758	222	0	554	8,153	8,758	221	0	7,850
Colorado	Craig	C2	8,387	212	0	508	7,785	8,387	212	0	7,326
Colorado	Craig	C3	2,451	62	0	456	2,564	2,451	62	0	2,141
Colorado	Hayden	H1	6,589	167	0	298	6,014	6,589	166	0	5,756
Colorado	Hayden	H2	10,050	254	0	435	9,155	10,050	254	0	8,778
Colorado	Martin Drake	5	1,242	31	0	63	1,141	1,242	31	0	1,085
Colorado	Martin Drake	6	2,180	55	0	122	2,013	2,180	55	0	1,904
Colorado	Martin Drake	7	3,471	88	0	182	3,193	3,471	88	0	3,031
Colorado	Nucla	1	1,282	33	0	0	1,113	1,282	33	0	1,118
Colorado	Pawnee	1	15,698	397	0	705	14,327	15,698	396	0	13,712
Colorado	Pawnee	**2	0	0	0	0	0	0	0	0	0
Colorado	Rawhide	101	1,542	39	0	451	1,789	1,542	39	0	1,347
Colorado	Ray D Nixon	1	4,811	122	0	267	4,441	4,811	121	0	4,203
Colorado	Ray D Nixon	**NA1	0	0	0	0	0	0	0	0	0
Colorado	Valmont	5	3,403	86	0	158	3,112	3,403	86	0	2,972
Colorado	Valmont	11	0	0	0	4	4	0	0	0	0
Colorado	Valmont	12	0	0	0	0	0	0	0	0	0
Colorado	Valmont	13	0	0	0	0	0	0	0	0	0
Colorado	Valmont	14	0	0	0	0	0	0	0	0	0
Colorado	Valmont	21	20	0	0	0	20	20	0	0	16
Colorado	Valmont	22	0	0	0	0	0	0	0	0	0
Colorado	Valmont	23	0	0	0	0	0	0	0	0	0
Colorado	Valmont	24	0	0	0	0	0	0	0	0	0
Colorado	Zuni	1	389	10	0	0	338	389	10	0	340

TABLE 2. -- PHASE II ALLOWANCE ALLOCATIONS

State	Plant Name	Boiler [1]	Allowances for years 2000–2009					Allowances for years 2010 and thereafter			
			(A) [2] Unadjusted basic	(B) Special allowance reserve deduction	(C) Additional basic (§405(a)(3))	(D) Total Bonus	(E) [3] Total annual phase II	(F) [2] Unadjusted basic	(G) Special allowance reserve deduction	(H) Additional basic (§ 405(a)(3))	(I) [4] Total annual phase II
Colorado	Zuni	2	0	0	0	0	0	7	0	0	6
Colorado	Zuni	3	3	0	0	2	5	10	0	0	9
Connecticut	Bridgeport Harbor	BHB1	2,375	60	0	0	2,061	2,375	60	0	2,074
Connecticut	Bridgeport Harbor	BHB2	5,401	137	0	0	4,687	5,401	136	0	4,718
Connecticut	Bridgeport Harbor	BHB3	13,119	332	0	0	11,384	13,119	331	0	11,459
Connecticut	Devon	3	1,119	28	0	0	971	1,119	28	0	978
Connecticut	Devon	6	1,026	26	0	0	891	1,026	26	0	896
Connecticut	Devon	7	3,208	81	0	0	2,784	3,208	81	0	2,802
Connecticut	Devon	8	3,431	87	0	0	2,978	3,431	87	0	2,996
Connecticut	Devon	4A	195	5	0	0	169	195	5	0	170
Connecticut	Devon	4B	196	5	0	0	170	196	5	0	171
Connecticut	Devon	5A	177	4	0	0	154	177	4	0	155
Connecticut	Devon	5B	177	4	0	0	154	177	4	0	155
Connecticut	English	EB13	129	3	0	0	112	129	3	0	113
Connecticut	English	EB14	180	5	0	0	155	180	5	0	157
Connecticut	South Meadow	11	508	12	0	0	442	508	12	0	444
Connecticut	South Meadow	12	466	12	0	0	404	466	12	0	406
Connecticut	South Meadow	13	812	20	0	0	706	812	20	0	710
Connecticut	Middletown	1	527	13	0	0	457	527	13	0	461
Connecticut	Middletown	2	1,519	38	0	0	1,318	1,519	38	0	1,327
Connecticut	Middletown	3	3,816	97	0	0	3,311	3,816	96	0	3,333
Connecticut	Middletown	4	2,730	69	0	0	2,369	2,730	69	0	2,384
Connecticut	Montville	5	1,380	35	0	0	1,196	1,380	35	0	1,205
Connecticut	Montville	6	6,486	164	0	0	5,628	6,486	164	0	5,665
Connecticut	New Haven Harbor	NHB1	14,934	378	0	0	12,958	14,934	377	0	13,044
Connecticut	Norwalk Harbor	1	5,875	149	0	0	5,097	5,875	148	0	5,132
Connecticut	Norwalk Harbor	2	6,236	158	0	0	5,410	6,236	157	0	5,447
Delaware	Edge Moor	3	4,065	103	0	0	3,527	4,065	103	0	3,550
Delaware	Edge Moor	4	7,194	182	0	0	6,243	7,194	182	0	6,283
Delaware	Edge Moor	5	7,384	187	0	0	6,408	7,384	186	0	6,450
Delaware	Hay Road	**3	181	5	0	0	156	181	5	0	158
Delaware	Indian River	1	3,425	87	0	0	2,972	3,425	86	0	2,992
Delaware	Indian River	2	3,636	92	0	0	3,156	3,636	92	0	3,176
Delaware	Indian River	3	6,218	157	0	0	5,396	6,218	157	0	5,431
Delaware	Indian River	4	15,328	388	0	0	13,300	15,328	387	0	13,386
Delaware	Mckee Run	3	2,110	53	0	739	2,570	2,110	53	0	1,843
Delaware	Vansant	**11	157	4	0	0	136	157	4	0	137
District Of Colu	Benning	15	591	15	0	0	513	591	15	0	516
District Of Colu	Benning	16	976	25	0	0	848	978	25	0	854
Florida	Anclote	1	11,740	297	0	2,744	12,931	11,737	296	0	10,252
Florida	Anclote	2	12,421	314	0	2,075	12,853	12,416	313	0	10,847
Florida	Arvah B Hopkins	1	51	1	0	35	80	96	2	0	84
Florida	Arvah B Hopkins	2	6,311	160	0	0	5,476	6,310	159	0	5,512
Florida	Avon Park	2	561	14	0	0	487	560	14	0	489
Florida	Big Bend	BB01	13,884	351	0	0	12,030	13,863	350	0	12,109
Florida	Big Bend	BB02	13,938	353	0	0	12,094	13,937	352	0	12,173
Florida	Big Bend	BB03	13,076	331	0	0	11,348	13,077	330	0	11,422

TABLE 2. -- PHASE II ALLOWANCE ALLOCATIONS

State	Plant Name	Boiler [1]	Allowances for years 2000–2009					Allowances for years 2010 and thereafter			
			(A) [2] Unadjusted basic	(B) Special allowance reserve deduction	(C) Additional basic (§405(a)(3))	(D) Total Bonus	(E) [3] Total annual phase II	(F) [2] Unadjusted basic	(G) Special allowance reserve deduction	(H) Additional basic (§ 405(a)(3))	(I) [4] Total annual phase II
Florida	Big Bend	BB04	10,036	254	0	0	8,709	10,035	253	0	8,786
Florida	C D Mcintosh Jr	1	1,033	26	0	0	897	1,032	26	0	901
Florida	C D Mcintosh Jr	2	1,175	30	0	0	1,019	1,175	30	0	1,026
Florida	C D Mcintosh Jr	3	11,348	287	0	0	9,848	11,346	286	0	9,913
Florida	Cape Canaveral	PCC1	4,821	122	0	0	4,183	4,816	122	0	4,206
Florida	Cape Canaveral	PCC2	5,664	143	0	0	4,915	5,662	143	0	4,946
Florida	Crist	1	40	1	0	0	35	40	1	0	35
Florida	Crist	2	0	0	0	3	3	3	0	0	3
Florida	Crist	3	0	0	0	4	4	4	0	0	4
Florida	Crist	4	2,819	71	0	0	2,448	2,819	71	0	2,462
Florida	Crist	5	2,776	70	0	0	2,410	2,776	70	0	2,425
Florida	Crist	6	9,595	243	0	0	8,325	9,594	242	0	8,380
Florida	Crist	7	14,307	362	0	0	12,415	14,305	361	0	12,485
Florida	Crystal River	1	14,198	359	0	0	12,320	14,197	358	0	12,401
Florida	Crystal River	2	16,334	413	0	0	14,173	16,334	412	0	14,268
Florida	Crystal River	4	27,029	684	0	0	23,452	27,026	682	0	23,607
Florida	Crystal River	5	28,861	732	0	0	25,040	28,860	730	0	25,207
Florida	Ct	**1	0	0	0	0	0	0	0	0	0
Florida	Ct	**2	0	0	0	0	0	0	0	0	0
Florida	Ct	**3	0	0	0	0	0	0	0	0	0
Florida	Ct	**4	0	0	0	0	0	0	0	0	0
Florida	Cutler	PCU5	0	0	0	0	0	4	0	0	4
Florida	Cutler	PCU6	0	0	0	0	0	10	0	0	9
Florida	Debary	**7	805	20	0	0	699	805	20	0	703
Florida	Debary	**8	805	20	0	0	699	805	20	0	703
Florida	Debary	**9	805	20	0	0	699	805	20	0	703
Florida	Debary	**10	805	20	0	0	699	805	20	0	703
Florida	Deerhaven	B1	44	1	0	59	88	130	3	0	114
Florida	Deerhaven	B2	9,451	239	0	0	8,201	9,450	239	0	8,254
Florida	Deerhaven	**NA1	0	0	0	0	0	0	0	0	0
Florida	Deerhaven	**NA2	0	0	0	0	0	0	0	0	0
Florida	F J Gannon	GB01	3,829	97	0	490	3,812	3,828	97	0	3,343
Florida	F J Gannon	GB02	4,730	120	0	283	4,387	4,729	119	0	4,131
Florida	F J Gannon	GB03	6,472	164	0	0	5,615	6,472	163	0	5,653
Florida	F J Gannon	GB04	7,055	179	0	50	6,171	7,055	178	0	6,182
Florida	F J Gannon	GB05	7,471	189	0	0	6,482	7,471	189	0	6,525
Florida	F J Gannon	GB06	11,520	292	0	0	9,998	11,520	291	0	10,062
Florida	Fort Myers	PFM1	3,639	92	0	0	3,158	3,637	92	0	3,177
Florida	Fort Myers	PFM2	10,803	273	0	0	9,374	10,800	273	0	9,433
Florida	G E Turner	2	92	2	0	461	542	92	2	0	81
Florida	G E Turner	3	820	21	0	0	712	819	21	0	715
Florida	G E Turner	4	696	18	0	0	603	696	18	0	608
Florida	Henry D King	7	64	2	0	7	63	74	2	0	65
Florida	Henry D King	8	6	0	0	21	26	39	1	0	34
Florida	Higgins	1	481	12	0	0	418	481	12	0	420
Florida	Higgins	2	541	14	0	0	469	541	14	0	472
Florida	Higgins	3	495	13	0	536	964	494	12	0	432

TABLE 2. -- PHASE II ALLOWANCE ALLOCATIONS

State	Plant Name	Boiler [1]	Allowances for years 2000–2009					Allowances for years 2010 and thereafter			
			(A) [2] Unadjusted basic	(B) Special allowance reserve deduction	(C) Additional basic (§405(a)(3))	(D) Total Bonus	(E) [3] Total annual phase II	(F) [2] Unadjusted basic	(G) Special allowance reserve deduction	(H) Additional basic (§ 405(a)(3))	(I) [4] Total annual phase II
Florida	Hookers Point	HB01	201	4	0	0	177	201	4	0	177
Florida	Hookers Point	HB02	231	5	0	0	202	231	5	0	202
Florida	Hookers Point	HB03	530	13	0	0	461	529	13	0	462
Florida	Hookers Point	HB04	799	20	0	0	692	796	20	0	695
Florida	Hookers Point	HB05	1,422	36	0	0	1,234	1,418	36	0	1,238
Florida	Hookers Point	HB06	545	14	0	0	472	544	14	0	475
Florida	Indian River	1	1,359	34	0	0	1,180	1,358	34	0	1,186
Florida	Indian River	2	1,791	45	0	0	1,555	1,790	45	0	1,564
Florida	Indian River	3	4,163	105	0	0	3,612	4,162	105	0	3,635
Florida	Indian River	**C	0	0	0	0	0	0	0	0	0
Florida	J D Kennedy	8	223	6	0	0	193	222	6	0	194
Florida	J D Kennedy	9	630	16	0	0	547	630	16	0	550
Florida	J D Kennedy	10	2,257	57	0	0	1,959	2,257	57	0	1,971
Florida	J R Kelly	JRK6	44	1	0	19	58	77	2	0	67
Florida	Smith	1	7,402	187	0	0	6,424	7,402	187	0	6,465
Florida	Smith	2	8,688	220	0	0	7,539	8,688	219	0	7,589
Florida	Larsen Memorial	7	350	9	0	0	303	350	9	0	306
Florida	Larsen Memorial	**8	759	19	0	0	659	759	19	0	663
Florida	Larsen Memorial	**9	0	0	0	0	0	0	0	0	0
Florida	Lauderdale	PFL4	896	23	0	0	778	895	23	0	781
Florida	Lauderdale	PFL5	918	23	0	0	796	918	23	0	802
Florida	Manatee	PMT1	15,736	398	0	0	13,654	15,734	397	0	13,743
Florida	Manatee	PMT2	14,499	367	0	0	12,581	14,494	366	0	12,660
Florida	Martin	PMR1	5,813	147	0	0	5,044	5,811	147	0	5,075
Florida	Martin	PMR2	6,895	175	0	0	5,982	6,892	174	0	6,020
Florida	Na 1 -- 7238	**1	0	0	0	0	0	0	0	0	0
Florida	Northside	1	5,586	141	0	1,334	6,182	5,586	141	0	4,879
Florida	Northside	2	1,189	30	0	5,220	6,251	1,186	30	0	1,036
Florida	Northside	3	7,586	192	0	4,478	11,061	7,584	191	0	6,625
Florida	P L Bartow	1	2,801	71	0	355	2,785	2,800	71	0	2,445
Florida	P L Bartow	2	2,773	70	0	534	2,941	2,772	70	0	2,421
Florida	P L Bartow	3	6,203	157	0	0	5,383	6,202	157	0	5,417
Florida	Port Everglades	PPE1	2,672	68	0	0	2,318	2,671	67	0	2,333
Florida	Port Everglades	PPE2	2,755	70	0	0	2,391	2,754	70	0	2,405
Florida	Port Everglades	PPE3	6,718	170	0	0	5,830	6,717	170	0	5,867
Florida	Port Everglades	PPE4	6,811	172	0	0	5,911	6,810	172	0	5,948
Florida	Putnam	HRSG11	1,879	48	0	0	1,629	1,879	47	0	1,642
Florida	Putnam	HRSG12	1,879	48	0	0	1,629	1,879	47	0	1,642
Florida	Putnam	HRSG21	1,791	45	0	0	1,555	1,790	45	0	1,564
Florida	Putnam	HRSG22	1,791	45	0	0	1,555	1,790	45	0	1,564
Florida	Riviera	PRV2	106	3	0	0	92	106	3	0	92
Florida	Riviera	PRV3	4,081	103	0	0	3,542	4,080	103	0	3,564
Florida	Riviera	PRV4	4,048	102	0	0	3,514	4,047	102	0	3,535
Florida	S O Purdom	7	506	13	0	0	438	506	13	0	442
Florida	Sanford	PSN3	1,236	31	0	0	1,073	1,234	31	0	1,078
Florida	Sanford	PSN4	3,778	96	0	5,290	8,568	3,771	95	0	3,294
Florida	Sanford	PSN5	3,662	93	0	0	3,177	3,656	92	0	3,194

TABLE 2. -- PHASE II ALLOWANCE ALLOCATIONS

State	Plant Name	Boiler [1]	Allowances for years 2000–2009					Allowances for years 2010 and thereafter			
			(A) [2] Unadjusted basic	(B) Special allowance reserve deduction	(C) Additional basic (§405(a)(3))	(D) Total Bonus	(E) [3] Total annual phase II	(F) [2] Unadjusted basic	(G) Special allowance reserve deduction	(H) Additional basic (§ 405(a)(3))	(I) [4] Total annual phase II
Florida	Scholz	1	2,238	57	0	0	1,942	2,236	56	0	1,955
Florida	Scholz	2	2,343	59	0	0	2,033	2,343	59	0	2,047
Florida	Seminole	1	21,011	532	0	0	18,232	21,011	530	0	18,353
Florida	Seminole	2	21,011	532	0	0	18,232	21,011	530	0	18,353
Florida	Southside	1	1,063	27	0	0	923	1,063	27	0	928
Florida	Southside	2	1,100	28	0	0	954	1,099	28	0	960
Florida	Southside	3	258	7	0	0	223	257	6	0	225
Florida	Southside	4	704	18	0	0	610	704	18	0	615
Florida	Southside	5	2,070	52	0	0	1,797	2,070	52	0	1,806
Florida	St Johns River Power	1	13,237	335	0	0	11,486	13,236	334	0	11,561
Florida	St Johns River Power	2	12,996	329	0	0	11,279	12,996	328	0	11,353
Florida	Stanton Energy	1	12,906	327	0	0	11,199	12,906	326	0	11,273
Florida	Stanton Energy	2	0	0	0	0	0	0	0	0	0
Florida	Stock Island	1	2,939	74	0	0	2,550	2,939	74	0	2,567
Florida	Stock Island D 1	**NA1	114	3	0	0	99	114	3	0	99
Florida	Stock Island D 2	**NA2	114	3	0	0	99	114	3	0	99
Florida	Suwannee River	1	289	7	0	0	251	289	7	0	253
Florida	Suwannee River	2	288	7	0	0	251	288	7	0	252
Florida	Suwannee River	3	739	19	0	0	641	738	19	0	644
Florida	Tom G Smith	S-3	1	0	0	8	9	12	0	0	11
Florida	Tom G Smith	S-4	75	2	0	14	80	91	2	0	80
Florida	Turkey Point	PTP1	6,705	170	0	0	5,818	6,704	169	0	5,856
Florida	Turkey Point	PTP2	6,755	171	0	0	5,861	6,754	171	0	5,899
Florida	Vero Beach Municipal	3	360	9	0	0	312	360	9	0	315
Florida	Vero Beach Municipal	4	97	2	0	21	108	132	3	0	116
Florida	Vero Beach Municipal	**5	362	9	0	0	314	362	9	0	316
Georgia	Arkwright	1	1,472	37	0	160	1,438	1,472	37	0	1,286
Georgia	Arkwright	2	1,544	39	0	119	1,458	1,544	39	0	1,349
Georgia	Arkwright	3	1,759	45	0	0	1,526	1,759	44	0	1,537
Georgia	Arkwright	4	1,433	36	0	0	1,244	1,433	36	0	1,252
Georgia	Atkinson	A2	1	0	0	3	4	4	0	0	4
Georgia	Atkinson	A3	2	0	0	4	6	6	0	0	5
Georgia	Atkinson	A4	2	0	0	3	5	5	0	0	4
Georgia	Atkinson	A1A	1	0	0	1	2	2	0	0	2
Georgia	Atkinson	A1B	1	0	0	1	2	2	0	0	2
Georgia	Bowen	1BLR	26,268	665	612	0	23,421	26,266	664	612	23,573
Georgia	Bowen	2BLR	27,036	684	629	0	24,087	27,036	683	629	24,244
Georgia	Bowen	3BLR	34,442	873	803	0	30,685	34,442	870	803	30,867
Georgia	Bowen	4BLR	34,434	873	802	0	30,677	34,434	870	802	30,879
Georgia	Hammond	1	4,215	107	98	0	3,755	4,215	106	98	3,780
Georgia	Hammond	2	4,424	112	103	0	3,943	4,424	112	103	3,967
Georgia	Hammond	3	4,277	108	100	0	3,811	4,277	108	100	3,836
Georgia	Hammond	4	18,068	457	421	0	16,100	18,068	456	421	16,203
Georgia	Harllee Branch	1	11,265	285	0	0	9,775	11,265	284	0	9,840
Georgia	Harllee Branch	2	13,325	337	0	0	11,564	13,325	336	0	11,639
Georgia	Harllee Branch	3	18,333	464	0	0	15,907	18,333	463	0	16,013
Georgia	Harllee Branch	4	18,193	461	0	0	15,786	18,193	459	0	15,891

TABLE 2. -- PHASE II ALLOWANCE ALLOCATIONS

State	Plant Name	Boiler [1]	Allowances for years 2000–2009					Allowances for years 2010 and thereafter			
			(A) [2] Unadjusted basic	(B) Special allowance reserve deduction	(C) Additional basic (§405(a)(3))	(D) Total Bonus	(E) [3] Total annual phase II	(F) [2] Unadjusted basic	(G) Special allowance reserve deduction	(H) Additional basic (§ 405(a)(3))	(I) [4] Total annual phase II
Georgia	Jack Mcdonough	MB1	9,556	242	222	0	8,514	9,556	241	222	8,569
Georgia	Jack Mcdonough	MB2	9,890	250	230	0	8,812	9,890	250	230	8,868
Georgia	Mcintosh	1	6,348	161	0	0	5,508	6,348	160	0	5,545
Georgia	Mcmanus	1	102	3	0	755	843	102	3	0	89
Georgia	Mcmanus	2	226	6	0	1,082	1,278	226	6	0	197
Georgia	Mitchell	3	6,242	158	0	0	5,416	6,242	158	0	5,452
Georgia	Port Wentworth	1	1,748	44	0	0	1,517	1,748	44	0	1,527
Georgia	Port Wentworth	2	1,672	42	0	46	1,498	1,672	42	0	1,461
Georgia	Port Wentworth	3	3,386	86	0	1	2,939	3,386	85	0	2,856
Georgia	Port Wentworth	4	499	13	0	0	432	499	13	0	435
Georgia	Riverside	12	5	0	0	0	5	5	0	0	4
Georgia	Scherer	1	24,092	610	0	0	20,904	24,092	606	0	21,044
Georgia	Scherer	2	24,263	614	0	0	21,052	24,263	613	0	21,192
Georgia	Scherer	3	24,302	615	0	0	21,086	24,302	614	0	21,227
Georgia	Scherer	4	24,274	614	0	0	21,062	24,274	613	0	21,202
Georgia	Wansley	1	33,969	861	791	0	30,262	33,969	859	791	30,461
Georgia	Wansley	2	31,404	796	731	0	27,977	31,404	794	731	28,161
Georgia	Yates	Y1BR	3,459	88	81	0	3,081	3,459	87	81	3,103
Georgia	Yates	Y2BR	3,379	86	79	0	3,011	3,379	85	79	3,031
Georgia	Yates	Y3BR	3,337	84	76	0	2,974	3,337	84	76	2,993
Georgia	Yates	Y4BR	4,276	108	100	0	3,812	4,276	106	100	3,837
Georgia	Yates	Y5BR	4,515	114	105	0	4,023	4,515	114	105	4,049
Georgia	Yates	Y6BR	11,685	301	277	0	10,590	11,685	300	277	10,658
Georgia	Yates	Y7BR	11,691	296	272	0	10,416	11,691	295	272	10,484
Illinois	Baldwin	1	20,165	510	469	0	17,967	20,165	509	469	18,083
Illinois	Baldwin	2	21,320	540	496	0	18,995	21,320	538	496	19,119
Illinois	Baldwin	3	20,425	517	475	0	18,199	20,425	516	475	18,315
Illinois	Coffeen	01	5,660	143	132	0	5,043	5,660	143	132	5,076
Illinois	Coffeen	02	17,119	433	399	0	15,253	17,119	432	399	15,352
Illinois	Collins	1	1,516	38	0	0	1,315	1,516	38	0	1,324
Illinois	Collins	2	1,295	33	0	0	1,123	1,295	33	0	1,131
Illinois	Collins	3	2,286	58	0	0	1,983	2,286	58	0	1,996
Illinois	Collins	4	1,866	47	0	0	1,620	1,866	47	0	1,630
Illinois	Collins	5	2,067	52	0	0	1,795	2,067	52	0	1,806
Illinois	Crawford	7	4,126	104	0	3,626	7,206	4,126	104	0	3,604
Illinois	Crawford	8	6,390	162	0	4,257	9,802	6,390	161	0	5,582
Illinois	Dallman	31	1,583	40	0	0	1,373	1,583	40	0	1,383
Illinois	Dallman	32	1,791	45	0	0	1,555	1,791	45	0	1,565
Illinois	Dallman	33	5,941	150	0	0	5,156	5,941	150	0	5,189
Illinois	Duck Creek	1	12,799	324	0	0	11,106	12,799	323	0	11,180
Illinois	E D Edwards	1	2,754	70	0	489	2,879	2,754	70	0	2,405
Illinois	E D Edwards	2	7,711	195	0	168	6,860	7,711	195	0	6,735
Illinois	E D Edwards	3	9,882	250	0	477	9,052	9,882	249	0	8,832
Illinois	Fisk	19	4,109	104	0	6,436	10,002	4,109	104	0	3,569
Illinois	Grand Tower	07	283	7	0	0	248	283	7	0	247
Illinois	Grand Tower	08	269	7	0	0	233	269	7	0	235
Illinois	Grand Tower	09	2,835	72	66	0	2,526	2,835	72	66	2,542

TABLE 2. -- PHASE II ALLOWANCE ALLOCATIONS

State	Plant Name	Boiler [1]	Allowances for years 2000–2009					Allowances for years 2010 and thereafter			
			(A) [2] Unadjusted basic	(B) Special allowance reserve deduction	(C) Additional basic (§405(a)(3))	(D) Total Bonus	(E) [3] Total annual phase II	(F) [2] Unadjusted basic	(G) Special allowance reserve deduction	(H) Additional basic (§ 405(a)(3))	(I) [4] Total annual phase II
Illinois	Havana	1	40	0	0	0	35	40	0	0	35
Illinois	Havana	2	50	0	0	0	45	50	0	0	45
Illinois	Havana	3	40	0	0	0	35	40	0	0	35
Illinois	Havana	4	40	0	0	0	35	40	0	0	35
Illinois	Havana	5	40	0	0	0	35	40	0	0	35
Illinois	Havana	6	40	0	0	0	35	40	0	0	35
Illinois	Havana	7	40	0	0	0	35	40	0	0	35
Illinois	Havana	8	40	0	0	0	35	40	0	0	35
Illinois	Havana	9	7,679	194	0	2,065	8,749	7,679	194	0	6,707
Illinois	Hennepin	1	2,307	58	0	0	2,002	2,307	58	0	2,015
Illinois	Hennepin	2	6,837	224	206	0	7,873	6,837	223	206	7,925
Illinois	Hutsonville	05	2,540	64	0	0	2,204	2,540	64	0	2,219
Illinois	Hutsonville	06	2,631	67	0	0	2,283	2,631	66	0	2,299
Illinois	Joliet 29	71	6,659	169	0	1,752	7,530	6,659	168	0	5,817
Illinois	Joliet 29	72	5,427	137	0	1,428	6,138	5,427	137	0	4,740
Illinois	Joliet 29	81	6,241	158	0	1,634	7,249	6,241	156	0	5,451
Illinois	Joliet 29	82	6,466	164	0	1,900	7,510	6,466	163	0	5,648
Illinois	Joliet 9	5	6,714	170	0	2,800	8,626	6,714	169	0	5,865
Illinois	Joppa Steam	1	6,042	153	0	0	5,243	6,042	153	0	5,277
Illinois	Joppa Steam	2	5,168	131	0	0	4,484	5,168	130	0	4,515
Illinois	Joppa Steam	3	5,888	149	0	0	5,109	5,888	149	0	5,143
Illinois	Joppa Steam	4	5,454	138	0	0	4,732	5,454	138	0	4,764
Illinois	Joppa Steam	5	5,479	139	0	0	4,753	5,479	138	0	4,786
Illinois	Joppa Steam	6	5,096	129	0	0	4,422	5,096	129	0	4,451
Illinois	Kincaid	1	15,134	383	352	0	13,484	15,134	382	352	13,571
Illinois	Kincaid	2	16,676	422	388	0	14,658	16,676	421	388	14,954
Illinois	Lakeside	7	722	18	0	0	627	722	18	0	631
Illinois	Lakeside	8	371	9	0	0	322	371	9	0	324
Illinois	Lakeside	GT2	0	0	0	0	0	0	0	0	0
Illinois	Marion	1	534	14	0	0	462	534	13	0	467
Illinois	Marion	2	547	14	0	0	474	547	14	0	478
Illinois	Marion	3	593	15	0	0	514	593	15	0	518
Illinois	Marion	4	7,817	198	0	0	6,782	7,817	197	0	6,826
Illinois	Meredosia	01	341	9	0	0	295	341	9	0	297
Illinois	Meredosia	02	367	9	0	0	319	367	9	0	321
Illinois	Meredosia	03	320	8	0	0	277	320	8	0	280
Illinois	Meredosia	04	291	7	0	0	253	291	7	0	255
Illinois	Meredosia	05	6,668	169	155	0	5,941	6,668	168	155	5,980
Illinois	Meredosia	06	52	1	0	0	46	52	1	0	46
Illinois	Newton	1	17,854	452	0	0	15,493	17,854	451	0	15,595
Illinois	Newton	2	15,919	403	0	0	13,813	15,919	402	0	13,905
Illinois	Powerton	51	9,631	244	0	2,275	10,632	9,631	243	0	8,412
Illinois	Powerton	52	9,515	241	0	2,247	10,503	9,515	240	0	8,311
Illinois	Powerton	61	9,787	248	0	1,951	10,442	9,787	247	0	8,549
Illinois	Powerton	62	9,864	250	0	1,966	10,525	9,864	249	0	8,616
Illinois	R S Wallace	9	70	2	0	840	901	70	2	0	61
Illinois	R S Wallace	10	202	5	0	2,255	2,430	202	5	0	177

TABLE 2. -- PHASE II ALLOWANCE ALLOCATIONS

State	Plant Name	Boiler [1]	Allowances for years 2000–2009					Allowances for years 2010 and thereafter			
			(A) [2] Unadjusted basic	(B) Special allowance reserve deduction	(C) Additional basic (§405(a)(3))	(D) Total Bonus	(E) [3] Total annual phase II	(F) [2] Unadjusted basic	(G) Special allowance reserve deduction	(H) Additional basic (§ 405(a)(3))	(I) [4] Total annual phase II
Illinois	Venice	1	5	0	0	0	5	5	0	0	5
Illinois	Venice	2	2	0	0	0	2	2	0	0	2
Illinois	Venice	3	18	0	0	0	17	19	0	0	17
Illinois	Venice	4	16	0	0	0	14	16	0	0	14
Illinois	Venice	5	11	0	0	0	10	11	0	0	9
Illinois	Venice	6	10	0	0	0	10	10	0	0	8
Illinois	Venice	7	2	0	0	0	2	2	0	0	2
Illinois	Venice	8	2	0	0	0	2	2	0	0	2
Illinois	Vermilion	1	3,239	82	0	0	2,811	3,239	82	0	2,829
Illinois	Vermilion	2	4,264	108	99	0	3,798	4,264	108	99	3,823
Illinois	Waukegan	7	7,203	182	0	1,911	8,162	7,203	182	0	6,291
Illinois	Waukegan	8	5,710	145	0	2,843	7,797	5,710	144	0	4,988
Illinois	Waukegan	17	1,712	43	0	1,605	3,091	1,712	43	0	1,496
Illinois	Will County	1	2,914	74	0	2,772	5,300	2,914	74	0	2,545
Illinois	Will County	2	2,857	72	0	2,351	4,831	2,857	72	0	2,496
Illinois	Will County	3	5,928	150	0	1,807	6,951	5,928	150	0	5,178
Illinois	Will County	4	10,418	264	0	4,867	13,726	10,418	263	0	9,100
Illinois	Wood River	1	0	0	0	3	3	3	0	0	3
Illinois	Wood River	2	0	0	0	3	3	3	0	0	3
Illinois	Wood River	3	0	0	0	3	3	3	0	0	3
Illinois	Wood River	4	2,009	51	0	501	2,244	2,009	51	0	1,755
Illinois	Wood River	5	10,834	274	0	0	9,401	10,834	274	0	9,463
Indiana	A B Brown	1	6,123	155	0	0	5,313	6,123	155	0	5,348
Indiana	A B Brown	2	5,178	131	0	0	4,491	5,178	131	0	4,521
Indiana	A B Brown	**4	730	18	0	0	634	730	18	0	638
Indiana	Bailly	7	5,355	136	125	0	4,772	5,355	135	125	4,803
Indiana	Bailly	8	7,648	194	178	0	6,814	7,648	193	178	6,856
Indiana	Breed	1	8,878	225	207	0	7,910	8,878	224	207	7,962
Indiana	Cayuga	1	16,018	405	373	0	14,272	16,018	404	373	14,365
Indiana	Cayuga	2	16,380	415	381	0	14,594	16,380	414	381	14,688
Indiana	Clifty Creek	1	9,673	245	0	0	8,394	9,673	244	0	8,449
Indiana	Clifty Creek	2	9,511	241	0	0	8,253	9,511	240	0	8,308
Indiana	Clifty Creek	3	9,797	248	0	0	8,500	9,797	247	0	8,556
Indiana	Clifty Creek	4	9,638	244	0	0	8,363	9,638	243	0	8,419
Indiana	Clifty Creek	5	9,292	235	0	0	8,063	9,292	235	0	8,116
Indiana	Clifty Creek	6	9,781	248	0	0	8,486	9,781	247	0	8,543
Indiana	Dean H Mitchell	4	1,681	43	0	1,645	3,103	1,681	42	0	1,469
Indiana	Dean H Mitchell	5	2,122	54	0	1,161	3,002	2,122	54	0	1,853
Indiana	Dean H Mitchell	6	1,907	48	0	1,301	2,955	1,907	48	0	1,666
Indiana	Dean H Mitchell	11	1,397	35	0	1,435	2,648	1,397	35	0	1,221
Indiana	Edwardsport	6–1	0	0	0	0	0	0	0	0	0
Indiana	Edwardsport	7–1	397	10	0	0	345	397	10	0	347
Indiana	Edwardsport	7–2	404	10	0	0	351	404	10	0	353
Indiana	Edwardsport	8–1	429	11	0	0	372	429	11	0	375
Indiana	Elmer W Stout	1	0	0	0	0	0	0	0	0	0
Indiana	Elmer W Stout	2	0	0	0	0	0	0	0	0	0
Indiana	Elmer W Stout	3	0	0	0	0	0	0	0	0	0

TABLE 2. -- PHASE II ALLOWANCE ALLOCATIONS

State	Plant Name	Boiler [1]	Allowances for years 2000-2009					Allowances for years 2010 and thereafter			
			(A) [2]	(B)	(C)	(D)	(E) [3]	(F) [2]	(G)	(H)	(I) [4]
			Unadjusted basic	Special allowance reserve deduction	Additional basic (§405(a)(3))	Total Bonus	Total annual phase II	Unadjusted basic	Special allowance reserve deduction	Additional basic (§ 405(a)(3))	Total annual phase II
Indiana	Elmer W Stout	4	0	0	0	0	0	0	0	0	0
Indiana	Elmer W Stout	5	0	0	0	0	0	0	0	0	0
Indiana	Elmer W Stout	6	0	0	0	0	0	0	0	0	0
Indiana	Elmer W Stout	7	0	0	0	0	0	0	0	0	0
Indiana	Elmer W Stout	8	0	0	0	0	0	0	0	0	0
Indiana	Elmer W Stout	9	1	0	0	0	1	1	0	0	1
Indiana	Elmer W Stout	10	2	0	0	0	2	2	0	0	2
Indiana	Elmer W Stout	50	1,864	47	43	0	1,861	1,864	47	43	1,871
Indiana	Elmer W Stout	60	2,291	58	53	0	2,040	2,291	58	53	2,054
Indiana	Elmer W Stout	70	11,332	287	264	0	10,098	11,332	286	264	10,162
Indiana	F B Culley	1	945	24	0	0	820	945	24	0	825
Indiana	F B Culley	2	1,958	50	46	0	1,744	1,958	49	46	1,757
Indiana	F B Culley	3	8,146	206	190	0	7,259	8,146	206	190	7,305
Indiana	Frank E Ratts	1SG1	4,000	101	93	0	3,565	4,000	101	93	3,587
Indiana	Frank E Ratts	2SG1	4,073	103	95	0	3,629	4,073	103	95	3,652
Indiana	Gibson	1	19,390	491	451	0	17,276	19,390	489	451	17,368
Indiana	Gibson	2	19,683	498	456	0	17,537	19,683	497	456	17,650
Indiana	Gibson	3	19,717	499	459	0	17,568	19,717	498	459	17,661
Indiana	Gibson	4	19,355	490	451	0	17,245	19,355	489	451	17,357
Indiana	Gibson	5	20,781	526	0	0	18,032	20,781	525	0	18,151
Indiana	H T Pritchard	1	0	0	0	0	0	0	0	0	0
Indiana	H T Pritchard	2	1	0	0	0	1	1	0	0	1
Indiana	H T Pritchard	3	274	7	0	0	238	274	7	0	239
Indiana	H T Pritchard	4	609	15	0	0	529	609	15	0	532
Indiana	H T Pritchard	5	681	17	0	0	592	681	17	0	595
Indiana	H T Pritchard	6	2,769	70	64	0	2,467	2,769	70	64	2,483
Indiana	Merom	1SG1	17,055	432	0	0	14,799	17,055	431	0	14,897
Indiana	Merom	2SG1	16,939	429	0	0	14,698	16,939	428	0	14,795
Indiana	Michigan City	4	1,039	26	0	0	902	1,039	26	0	908
Indiana	Michigan City	5	1,154	29	0	0	1,001	1,154	29	0	1,008
Indiana	Michigan City	6	1,165	30	0	0	1,010	1,165	30	0	1,017
Indiana	Michigan City	12	11,189	283	260	0	9,969	11,189	282	260	10,034
Indiana	Na 1 -- 7221	**1	0	0	0	0	0	0	0	0	0
Indiana	Na 1 -- 7221	**2	0	0	0	0	0	0	0	0	0
Indiana	Na 1 -- 7221	**3	0	0	0	0	0	0	0	0	0
Indiana	Na 1 -- 7221	**4	0	0	0	0	0	0	0	0	0
Indiana	Na 1 -- 7228	**4	0	0	0	0	0	0	0	0	0
Indiana	Na 1 -- 7228	**5	0	0	0	0	0	0	0	0	0
Indiana	Noblesville	1	75	2	0	0	66	75	2	0	65
Indiana	Noblesville	2	62	2	0	0	54	62	2	0	53
Indiana	Noblesville	3	46	1	0	0	40	46	1	0	40
Indiana	Petersburg	1	7,889	200	184	0	7,029	7,889	199	184	7,075
Indiana	Petersburg	2	15,544	393	362	0	13,850	15,544	392	362	13,940
Indiana	Petersburg	3	19,296	488	0	0	16,743	19,296	487	0	16,855
Indiana	Petersburg	4	18,460	467	0	0	16,019	18,460	466	0	16,124
Indiana	R Gallagher	1	3,236	82	75	0	2,885	3,236	82	75	2,903
Indiana	R Gallagher	2	3,494	88	81	0	3,113	3,494	88	81	3,133

TABLE 2. -- PHASE II ALLOWANCE ALLOCATIONS

State	Plant Name	Boiler [1]	Allowances for years 2000–2009					Allowances for years 2010 and thereafter			
			(A) [2] Unadjusted basic	(B) Special allowance reserve deduction	(C) Additional basic (§405(a)(3))	(D) Total Bonus	(E) [3] Total annual phase II	(F) [2] Unadjusted basic	(G) Special allowance reserve deduction	(H) Additional basic (§ 405(a)(3))	(I) [4] Total annual phase II
Indiana	R Gallagher	3	3,134	79	73	0	2,792	3,134	79	73	2,811
Indiana	R Gallagher	4	3,265	83	76	0	2,908	3,265	82	76	2,928
Indiana	R M Schahfer	14	5,553	141	0	5,496	10,316	5,553	140	0	4,851
Indiana	R M Schahfer	15	5,089	129	0	6,239	10,655	5,089	126	0	4,446
Indiana	R M Schahfer	17	5,969	151	0	0	5,180	5,969	151	0	5,213
Indiana	R M Schahfer	18	5,930	150	0	0	5,146	5,930	150	0	5,179
Indiana	Rockport	MB1	37,716	956	0	0	32,722	37,716	953	0	32,944
Indiana	Rockport	MB2	37,716	956	0	0	32,722	37,716	953	0	32,944
Indiana	State Line	3	3,938	100	0	1,260	4,697	3,938	99	0	3,440
Indiana	State Line	4	6,882	174	0	902	6,874	6,882	174	0	6,011
Indiana	Tanners Creek	U1	2,324	59	0	742	2,756	2,324	59	0	2,030
Indiana	Tanners Creek	U2	2,439	62	0	663	2,760	2,439	62	0	2,130
Indiana	Tanners Creek	U3	2,609	66	0	1,797	4,081	2,609	66	0	2,279
Indiana	Tanners Creek	U4	11,915	302	277	0	10,616	11,915	301	277	10,684
Indiana	Wabash River	1	1,916	49	45	0	1,706	1,916	48	45	1,721
Indiana	Wabash River	2	1,549	39	36	0	1,380	1,549	39	36	1,389
Indiana	Wabash River	3	1,799	46	42	0	1,603	1,799	45	42	1,614
Indiana	Wabash River	4	1,750	44	0	0	1,519	1,750	44	0	1,529
Indiana	Wabash River	5	1,761	45	41	0	1,569	1,761	44	41	1,580
Indiana	Wabash River	6	5,894	149	137	0	5,251	5,894	149	137	5,285
Indiana	Warrick	4	11,698	296	272	0	10,422	11,698	295	272	10,490
Indiana	Whitewater Valley	1	2,557	65	0	0	2,218	2,557	65	0	2,233
Indiana	Whitewater Valley	2	7,650	194	0	0	6,636	7,650	193	0	6,662
Iowa	Ames	7	460	12	0	0	400	460	12	0	401
Iowa	Ames	8	2,095	53	0	0	1,818	2,095	53	0	1,830
Iowa	Burlington	1	5,141	130	0	0	4,461	5,141	130	0	4,490
Iowa	Council Bluffs	1	745	19	0	458	1,104	745	19	0	851
Iowa	Council Bluffs	2	1,059	27	0	724	1,643	1,059	27	0	925
Iowa	Council Bluffs	3	18,234	462	0	0	15,822	18,234	460	0	15,927
Iowa	Des Moines	10	187	5	0	0	162	187	5	0	163
Iowa	Des Moines	11	279	7	0	0	242	279	7	0	244
Iowa	Des Moines	**5	0	0	0	0	0	0	0	0	0
Iowa	Dubuque	1	1,279	32	0	0	1,111	1,279	32	0	1,117
Iowa	Dubuque	5	349	9	0	0	302	349	9	0	305
Iowa	Earl F Wisdom	1	433	11	0	0	376	433	11	0	378
Iowa	Fair Station	2	6,370	161	0	0	5,528	6,370	161	0	5,564
Iowa	George Neal	1	2,640	67	0	0	2,291	2,640	67	0	2,306
Iowa	George Neal	2	5,025	127	0	4,685	9,046	5,025	127	0	4,389
Iowa	George Neal	3	9,760	247	0	3,755	12,224	9,760	246	0	8,525
Iowa	George Neal	4	17,305	436	0	0	15,015	17,305	437	0	15,115
Iowa	Graettinger	**5	11	0	0	0	10	11	0	0	10
Iowa	Grinnell	**2	217	6	0	0	188	217	5	0	190
Iowa	Lansing	3	547	14	0	0	474	547	14	0	478
Iowa	Lansing	4	4,956	125	0	292	4,593	4,956	125	0	4,329
Iowa	Lime Creek	**1	291	7	0	0	253	291	7	0	255
Iowa	Lime Creek	**2	291	7	0	0	253	291	7	0	255
Iowa	Louisa	101	17,817	451	0	0	15,460	17,817	450	0	15,562

TABLE 2. -- PHASE II ALLOWANCE ALLOCATIONS

State	Plant Name	Boiler [1]	Allowances for years 2000–2009					Allowances for years 2010 and thereafter			
			(A) [2] Unadjusted basic	(B) Special allowance reserve deduction	(C) Additional basic (§405(a)(3))	(D) Total Bonus	(E) [3] Total annual phase II	(F) [2] Unadjusted basic	(G) Special allowance reserve deduction	(H) Additional basic (§ 405(a)(3))	(I) [4] Total annual phase II
Iowa	Maynard Station	1	35	1	0	0	31	35	1	0	30
Iowa	Milton L Kapp	2	6,622	168	0	0	5,745	6,622	167	0	5,784
Iowa	Muscatine	6	1,556	39	0	0	1,350	1,556	38	0	1,359
Iowa	Muscatine	9	2,316	59	0	0	2,009	2,316	58	0	2,023
Iowa	Na 1 -- 7230	**2	0	0	0	0	0	0	0	0	0
Iowa	Ottumwa	1	21,819	552	0	0	18,934	21,819	551	0	19,058
Iowa	Pella	6	865	22	0	0	750	865	22	0	756
Iowa	Pella	7	1,116	28	0	0	969	1,116	28	0	975
Iowa	Pella	8	31	1	0	41	68	31	1	0	26
Iowa	Prairie Creek	3	829	21	0	0	719	829	21	0	724
Iowa	Prairie Creek	4	3,924	99	0	0	3,405	3,924	99	0	3,428
Iowa	Riverside	9	1,994	50	0	0	1,731	1,994	50	0	1,742
Iowa	Sixth Street	1	930	24	0	0	807	930	24	0	811
Iowa	Sixth Street	2	201	6	0	0	177	201	6	0	175
Iowa	Sixth Street	3	177	6	0	0	154	177	6	0	154
Iowa	Sixth Street	4	85	1	0	0	77	85	1	0	74
Iowa	Sixth Street	5	352	10	0	0	307	352	10	0	308
Iowa	Streeter Station	7	633	16	0	0	549	633	16	0	553
Iowa	Sutherland	1	228	6	0	0	197	228	6	0	199
Iowa	Sutherland	2	429	11	0	0	373	429	11	0	375
Iowa	Sutherland	3	2,505	63	0	0	2,173	2,505	63	0	2,188
Kansas	Arthur Mullergren	3	0	0	0	1	1	1	0	0	1
Kansas	Cimarron River	1	0	0	0	12	12	12	0	0	11
Kansas	Coffeyville	4	1	0	0	10	11	11	0	0	10
Kansas	East 12Th St	4	1	0	0	9	10	9	0	0	8
Kansas	Garden City	S-2	0	0	0	0	0	0	0	0	0
Kansas	Gordon Evans	1	1	0	0	63	64	64	2	0	56
Kansas	Gordon Evans	2	1	0	0	24	25	24	1	0	21
Kansas	Holcomb	SGU1	4,583	116	0	0	3,977	4,583	116	0	4,003
Kansas	Hutchinson	1	0	0	0	0	0	0	0	0	0
Kansas	Hutchinson	2	0	0	0	0	0	0	0	0	0
Kansas	Hutchinson	3	0	0	0	0	0	0	0	0	0
Kansas	Hutchinson	4	0	0	0	18	18	18	0	0	16
Kansas	Jeffrey Energy Centr	1	19,555	495	0	0	16,969	19,555	494	0	17,080
Kansas	Jeffrey Energy Centr	2	20,668	523	0	0	17,934	20,668	522	0	18,053
Kansas	Jeffrey Energy Centr	3	23,580	597	0	0	20,480	23,580	595	0	20,597
Kansas	Judson Large	4	1	0	0	38	39	39	1	0	34
Kansas	Kaw	1	900	23	0	0	780	900	23	0	786
Kansas	Kaw	2	707	18	0	0	613	707	18	0	617
Kansas	Kaw	3	590	15	0	0	512	590	15	0	515
Kansas	Kingman	**9	58	1	0	0	51	58	1	0	51
Kansas	La Cygne	1	16,432	416	0	3,568	17,824	16,432	415	0	14,353
Kansas	La Cygne	2	17,210	436	0	0	14,933	17,210	434	0	15,033
Kansas	Lawrence	2	2	0	0	0	2	2	0	0	2
Kansas	Lawrence	3	713	18	0	1,524	2,143	713	18	0	623
Kansas	Lawrence	4	1,081	27	0	672	1,811	1,081	27	0	945
Kansas	Lawrence	5	4,279	108	0	1,633	5,348	4,279	108	0	3,738

TABLE 2. -- PHASE II ALLOWANCE ALLOCATIONS

State	Plant Name	Boiler [1]	Allowances for years 2000–2009					Allowances for years 2010 and thereafter			
			(A) [2] Unadjusted basic	(B) Special allowance reserve deduction	(C) Additional basic (§405(a)(3))	(D) Total Bonus	(E) [3] Total annual phase II	(F) [2] Unadjusted basic	(G) Special allowance reserve deduction	(H) Additional basic (§ 405(a)(3))	(I) [4] Total annual phase II
Kansas	Mcpherson 2	1	1	0	0	0	1	1	0	0	1
Kansas	Mulvane	**7	6	0	0	0	5	6	0	0	5
Kansas	Mulvane	**8	6	0	0	0	5	6	0	0	5
Kansas	Murray Gill	1	0	0	0	1	1	1	0	0	1
Kansas	Murray Gill	2	0	0	0	5	5	5	0	0	4
Kansas	Murray Gill	3	1	0	0	49	50	50	1	0	44
Kansas	Murray Gill	4	1	0	0	61	62	62	2	0	54
Kansas	Nearman Creek	N1	7,919	200	0	0	6,872	7,919	200	0	6,917
Kansas	Neosho	7	14	0	0	0	13	14	0	0	13
Kansas	Quindaro	1	2,322	59	0	0	2,014	2,322	59	0	2,028
Kansas	Quindaro	2	2,375	60	0	0	2,061	2,375	60	0	2,074
Kansas	Ripley	**2	0	0	0	0	0	0	0	0	0
Kansas	Ripley	**3	0	0	0	0	0	0	0	0	0
Kansas	Riverton	39	1,187	30	0	0	1,030	1,187	30	0	1,037
Kansas	Riverton	40	2,015	51	0	0	1,749	2,015	51	0	1,760
Kansas	Russell	**11	35	1	0	0	31	35	1	0	30
Kansas	Russell	**12	34	1	0	0	30	34	1	0	30
Kansas	Tecumseh	9	1,051	27	0	1,336	2,248	1,051	27	0	918
Kansas	Tecumseh	10	1,677	42	0	2,449	3,905	1,677	42	0	1,465
Kentucky	Big Sandy	BSU1	7,347	186	0	0	6,376	7,347	185	0	6,416
Kentucky	Big Sandy	BSU2	21,199	537	0	1,167	19,562	21,199	535	0	16,517
Kentucky	Cane Run	3	44	1	0	0	39	44	1	0	39
Kentucky	Cane Run	4	3,110	79	0	1,800	4,499	3,110	79	0	2,716
Kentucky	Cane Run	5	4,939	125	0	18	4,304	4,939	125	0	4,314
Kentucky	Cane Run	6	6,201	157	0	73	5,454	6,201	157	0	5,416
Kentucky	Cane Run	**12	0	0	0	0	0	0	0	0	0
Kentucky	Cane Run	**13	0	0	0	0	0	0	0	0	0
Kentucky	Coleman	C1	5,402	137	126	0	4,614	5,402	136	126	4,845
Kentucky	Coleman	C2	6,162	156	143	0	5,490	6,162	156	143	5,525
Kentucky	Coleman	C3	5,925	150	138	0	5,279	5,925	150	138	5,313
Kentucky	Cooper	1	3,574	90	83	0	3,185	3,574	90	83	3,205
Kentucky	Cooper	2	7,355	186	171	0	6,554	7,355	186	171	6,595
Kentucky	D B Wilson	W1	14,244	361	0	0	12,360	14,244	360	0	12,441
Kentucky	Dale	3	1,931	49	0	294	1,969	1,931	49	0	1,686
Kentucky	Dale	4	1,596	40	0	451	1,836	1,596	40	0	1,394
Kentucky	E W Brown	1	3,413	86	79	0	3,042	3,413	86	79	3,060
Kentucky	E W Brown	2	6,465	164	150	0	5,759	6,465	163	150	5,797
Kentucky	E W Brown	3	12,526	317	292	0	11,162	12,526	316	292	11,233
Kentucky	East Bend	2	20,936	530	0	0	18,166	20,936	529	0	18,288
Kentucky	Elmer Smith	1	3,122	79	73	0	2,782	3,122	79	73	2,800
Kentucky	Elmer Smith	2	6,916	175	161	0	6,162	6,916	175	161	6,201
Kentucky	Ghent	1	13,638	345	317	0	12,152	13,638	344	317	12,230
Kentucky	Ghent	2	11,450	290	0	2,717	12,652	11,450	289	0	10,001
Kentucky	Ghent	3	15,953	404	0	0	13,643	15,953	403	0	13,934
Kentucky	Ghent	4	15,675	397	0	0	13,601	15,675	396	0	13,691
Kentucky	Green River	1	2	0	0	128	130	2	0	0	2
Kentucky	Green River	2	17	0	0	835	851	17	0	0	15

TABLE 2. -- PHASE II ALLOWANCE ALLOCATIONS

State	Plant Name	Boiler [1]	Allowances for years 2000–2009					Allowances for years 2010 and thereafter			
			(A) [2] Unadjusted basic	(B) Special allowance reserve deduction	(C) Additional basic (§405(a)(3))	(D) Total Bonus	(E) [3] Total annual phase II	(F) [2] Unadjusted basic	(G) Special allowance reserve deduction	(H) Additional basic (§ 405(a)(3))	(I) [4] Total annual phase II
Kentucky	Green River	3	14	0	0	731	744	14	0	0	13
Kentucky	Green River	4	3,229	82	0	0	2,802	3,229	82	0	2,820
Kentucky	Green River	5	3,753	95	87	0	3,344	3,753	95	87	3,365
Kentucky	H L Spurlock	1	10,935	277	255	0	9,744	10,935	276	255	9,806
Kentucky	H L Spurlock	2	18,959	480	0	0	16,451	18,959	479	0	16,560
Kentucky	Henderson I	6	926	23	0	0	803	926	23	0	809
Kentucky	Hmp&L Station 2	H1	6,410	162	149	0	5,712	6,410	162	149	5,748
Kentucky	Hmp&L Station 2	H2	6,607	167	154	0	5,888	6,607	167	154	5,925
Kentucky	J K Smith	1	0	0	0	0	0	0	0	0	0
Kentucky	Mill Creek	1	8,778	222	0	401	8,018	8,778	222	0	7,867
Kentucky	Mill Creek	2	8,960	227	0	300	8,075	8,960	226	0	7,826
Kentucky	Mill Creek	3	12,549	318	0	0	10,888	12,549	317	0	10,961
Kentucky	Mill Creek	4	15,565	394	0	0	13,506	15,565	393	0	13,595
Kentucky	Na 1 -- 7220	**3	0	0	0	0	0	0	0	0	0
Kentucky	Na 1 -- 7220	**4	0	0	0	0	0	0	0	0	0
Kentucky	Na 1 -- 7220	**5	0	0	0	0	0	0	0	0	0
Kentucky	Paradise	1	12,366	313	0	0	10,729	12,366	312	0	10,801
Kentucky	Paradise	2	14,060	356	0	0	12,200	14,060	355	0	12,261
Kentucky	Paradise	3	28,401	720	661	0	25,302	28,401	717	661	25,468
Kentucky	Pineville	3	483	12	0	491	911	483	12	0	422
Kentucky	R D Green	G1	6,049	153	0	0	5,249	6,049	153	0	5,263
Kentucky	R D Green	G2	7,268	184	0	0	6,324	7,268	184	0	6,366
Kentucky	Robert Reid	R1	1,076	27	0	0	935	1,076	27	0	940
Kentucky	Shawnee	1	2,991	76	0	1,026	3,621	2,991	76	0	2,612
Kentucky	Shawnee	2	3,082	78	0	975	3,649	3,082	78	0	2,692
Kentucky	Shawnee	3	3,471	88	0	671	3,682	3,471	88	0	3,031
Kentucky	Shawnee	4	3,450	87	0	576	3,571	3,450	87	0	3,014
Kentucky	Shawnee	5	3,369	85	0	878	3,802	3,369	85	0	2,943
Kentucky	Shawnee	6	3,699	94	0	475	3,684	3,699	93	0	3,231
Kentucky	Shawnee	7	4,085	103	0	65	3,610	4,085	103	0	3,568
Kentucky	Shawnee	8	3,909	99	0	150	3,542	3,909	99	0	3,414
Kentucky	Shawnee	9	4,189	106	0	0	3,635	4,189	106	0	3,659
Kentucky	Shawnee	10	5,448	138	127	0	4,853	5,448	138	127	4,885
Kentucky	Trimble County	1	11,009	279	0	0	9,553	11,009	278	0	9,618
Kentucky	Tyrone	1	0	0	0	0	0	0	0	0	0
Kentucky	Tyrone	2	0	0	0	0	0	0	0	0	0
Kentucky	Tyrone	3	0	0	0	0	0	0	0	0	0
Kentucky	Tyrone	4	0	0	0	0	0	0	0	0	0
Kentucky	Tyrone	5	771	20	0	1,036	1,707	771	19	0	674
Louisiana	A B Paterson	3	0	0	0	7	7	4	0	0	4
Louisiana	A B Paterson	4	0	0	0	8	8	7	0	0	6
Louisiana	Arsenal Hill	5A	0	0	0	30	30	21	1	0	18
Louisiana	Big Cajun 1	1B1	8	0	0	20	27	42	1	0	37
Louisiana	Big Cajun 1	1B2	8	0	0	20	27	39	1	0	34
Louisiana	Big Cajun 2	2B1	16,337	414	0	571	14,748	16,337	412	0	14,270
Louisiana	Big Cajun 2	2B2	16,132	406	0	522	14,520	16,132	407	0	14,091
Louisiana	Big Cajun 2	2B3	16,091	407	0	575	14,538	16,091	406	0	14,055

TABLE 2. -- PHASE II ALLOWANCE ALLOCATIONS

State	Plant Name	Boiler [1]	Allowances for years 2000–2009					Allowances for years 2010 and thereafter			
			(A) [2] Unadjusted basic	(B) Special allowance reserve deduction	(C) Additional basic (§405(a)(3))	(D) Total Bonus	(E) [3] Total annual phase II	(F) [2] Unadjusted basic	(G) Special allowance reserve deduction	(H) Additional basic (§ 405(a)(3))	(I) [4] Total annual phase II
Louisiana	Coughlin	6	0	0	0	46	46	39	1	0	34
Louisiana	Coughlin	7	2	0	0	126	128	159	4	0	139
Louisiana	D G Hunter	3	0	0	0	0	0	10	0	0	9
Louisiana	D G Hunter	4	1	0	0	31	32	26	1	0	24
Louisiana	Doc Bonin	1	4	0	0	8	12	19	0	0	17
Louisiana	Doc Bonin	2	1	0	0	23	24	34	1	0	30
Louisiana	Doc Bonin	3	1	0	0	44	45	102	3	0	89
Louisiana	Dolet Hills	1	23,424	593	0	3	20,327	23,424	591	0	20,460
Louisiana	Houma	15	1	0	0	9	10	16	0	0	14
Louisiana	Houma	16	0	0	0	14	14	32	1	0	28
Louisiana	Lieberman	3	2	0	0	84	86	96	2	0	84
Louisiana	Lieberman	4	1	0	0	71	72	72	2	0	63
Louisiana	Little Gypsy	1	47	1	0	203	244	254	8	0	222
Louisiana	Little Gypsy	2	77	2	0	310	377	400	10	0	349
Louisiana	Little Gypsy	3	102	3	0	454	542	540	14	0	471
Louisiana	Louisiana 1	1A	2	0	0	114	116	19	0	0	17
Louisiana	Louisiana 1	2A	2	0	0	0	2	19	0	0	17
Louisiana	Louisiana 1	3A	2	0	0	0	2	19	0	0	17
Louisiana	Louisiana 2	10	0	0	0	0	0	0	0	0	0
Louisiana	Louisiana 2	11	0	0	0	0	0	0	0	0	0
Louisiana	Louisiana 2	12	0	0	0	0	0	0	0	0	0
Louisiana	Michoud	1	2	0	0	69	71	94	2	0	82
Louisiana	Michoud	2	2	0	0	104	106	157	4	0	137
Louisiana	Michoud	3	52	1	0	445	491	532	13	0	465
Louisiana	Monroe	11	2	0	0	11	13	13	0	0	12
Louisiana	Monroe	12	7	0	0	39	45	43	1	0	38
Louisiana	Morgan City	4	1	0	0	4	5	6	0	0	5
Louisiana	Natchitoches	10	0	0	0	0	0	0	0	0	0
Louisiana	Ninemile Point	1	25	1	0	39	61	74	2	0	65
Louisiana	Ninemile Point	2	30	1	0	86	112	116	3	0	103
Louisiana	Ninemile Point	3	27	1	0	73	96	99	3	0	88
Louisiana	Ninemile Point	4	134	3	0	573	690	697	18	0	608
Louisiana	Ninemile Point	5	173	4	0	778	926	925	23	0	808
Louisiana	Opelousas	10	1	0	0	0	1	1	0	0	1
Louisiana	R S Nelson	1	2	0	0	28	30	39	1	0	34
Louisiana	R S Nelson	2	1	0	0	32	33	37	1	0	32
Louisiana	R S Nelson	3	1	0	0	38	39	30	1	0	26
Louisiana	R S Nelson	4	5	0	0	118	123	318	8	0	278
Louisiana	R S Nelson	6	21,332	540	0	900	19,410	21,332	539	0	18,632
Louisiana	Rodemacher	1	3,394	86	0	277	3,222	3,394	86	0	2,984
Louisiana	Rodemacher	2	18,462	467	0	726	16,749	18,462	466	0	16,126
Louisiana	Ruston	2	1	0	0	3	4	7	0	0	6
Louisiana	Ruston	3	0	0	0	5	5	26	1	0	22
Louisiana	Sterlington	10	43	1	0	136	174	178	4	0	156
Louisiana	Sterlington	7AB	15	0	0	58	72	82	2	0	72
Louisiana	Teche	2	0	0	0	27	27	25	1	0	21
Louisiana	Teche	3	5	0	0	441	446	420	11	0	386

TABLE 2. -- PHASE II ALLOWANCE ALLOCATIONS

State	Plant Name	Boiler [1]	Allowances for years 2000–2009					Allowances for years 2010 and thereafter			
			(A) [2] Unadjusted basic	(B) Special allowance reserve deduction	(C) Additional basic (§405(a)(3))	(D) Total Bonus	(E) [3] Total annual phase II	(F) [2] Unadjusted basic	(G) Special allowance reserve deduction	(H) Additional basic (§ 405(a)(3))	(I) [4] Total annual phase II
Louisiana	Waterford 1 & 2	1	4,669	123	0	293	4,518	4,669	123	0	4,253
Louisiana	Waterford 1 & 2	2	3,760	96	0	228	3,506	3,760	95	0	3,302
Louisiana	Willow Glen	1	2	0	0	97	99	100	3	0	87
Louisiana	Willow Glen	2	0	0	0	25	25	23	1	0	20
Louisiana	Willow Glen	3	0	0	0	93	93	37	1	0	32
Louisiana	Willow Glen	4	4	0	0	286	290	337	9	0	294
Louisiana	Willow Glen	5	26	1	0	436	458	499	13	0	435
Maine	Graham Station	5	393	10	0	0	341	393	10	0	343
Maine	Mason Steam	3	2	0	0	0	2	2	0	0	2
Maine	Mason Steam	4	1	0	0	0	1	1	0	0	1
Maine	Mason Steam	5	1	0	0	0	1	1	0	0	1
Maine	William F Wyman	1	532	13	0	694	1,155	532	13	0	465
Maine	William F Wyman	2	626	16	0	613	1,156	626	16	0	547
Maine	William F Wyman	3	3,072	78	0	257	2,922	3,072	78	0	2,683
Maine	William F Wyman	4	7,169	181	0	0	6,221	7,169	181	0	6,262
Maryland	Brandon Shores	1	21,151	535	0	0	18,354	21,151	534	0	18,475
Maryland	Brandon Shores	2	8,907	225	0	0	7,729	8,907	225	0	7,760
Maryland	C P Crane	1	4,969	126	0	0	4,312	4,969	125	0	4,341
Maryland	C P Crane	2	4,619	117	0	0	4,006	4,619	117	0	4,034
Maryland	Chalk Point	1	10,515	266	0	0	9,124	10,515	265	0	9,185
Maryland	Chalk Point	2	11,677	296	0	0	10,132	11,677	295	0	10,199
Maryland	Chalk Point	3	5,965	151	0	7,282	12,456	5,965	151	0	5,210
Maryland	Chalk Point	4	2,971	75	0	0	2,578	2,971	75	0	2,595
Maryland	Chalk Point	**GT3	808	20	0	0	702	808	20	0	706
Maryland	Chalk Point	**GT4	808	20	0	0	702	808	20	0	706
Maryland	Chalk Point	**GT5	1,022	26	0	0	887	1,022	26	0	892
Maryland	Chalk Point	**GT6	1,022	26	0	0	887	1,022	26	0	892
Maryland	Coal Gas Cc 1	**CT1	1,236	31	0	0	1,073	1,236	31	0	1,080
Maryland	Coal Gas Cc 1	**CW1	0	0	0	0	0	0	0	0	0
Maryland	Coal Gas Cc 2	**CT3	0	0	0	0	0	0	0	0	0
Maryland	Coal Gas Cc 2	**CT4	0	0	0	0	0	0	0	0	0
Maryland	Dickerson	1	6,683	169	0	0	5,799	6,683	169	0	5,837
Maryland	Dickerson	2	6,285	159	0	0	5,454	6,285	159	0	5,489
Maryland	Dickerson	3	6,680	169	0	0	5,797	6,680	169	0	5,834
Maryland	Easton 2	**26	0	0	0	0	0	0	0	0	0
Maryland	Easton 2	**27	0	0	0	0	0	0	0	0	0
Maryland	Gould Street	3	939	24	0	0	814	939	24	0	820
Maryland	Herbert A Wagner	1	1,474	37	0	0	1,280	1,474	37	0	1,288
Maryland	Herbert A Wagner	2	1,485	38	0	0	1,287	1,485	38	0	1,297
Maryland	Herbert A Wagner	3	9,577	242	0	0	8,311	9,577	242	0	8,365
Maryland	Herbert A Wagner	4	1,737	44	0	0	1,507	1,737	44	0	1,517
Maryland	Morgantown	1	19,348	490	0	0	16,786	19,348	488	0	16,900
Maryland	Morgantown	2	18,498	468	0	0	16,051	18,498	467	0	16,157
Maryland	Nanticoke	**ST1	0	0	0	0	0	0	0	0	0
Maryland	Perryman	**52	0	0	0	0	0	0	0	0	0
Maryland	Perryman	**61	0	0	0	0	0	0	0	0	0
Maryland	Perryman	**62	0	0	0	0	0	0	0	0	0

TABLE 2. -- PHASE II ALLOWANCE ALLOCATIONS

State	Plant Name	Boiler [1]	Allowances for years 2000–2009					Allowances for years 2010 and thereafter			
			(A) [2] Unadjusted basic	(B) Special allowance reserve deduction	(C) Additional basic (§405(a)(3))	(D) Total Bonus	(E) [3] Total annual phase II	(F) [2] Unadjusted basic	(G) Special allowance reserve deduction	(H) Additional basic (§ 405(a)(3))	(I) [4] Total annual phase II
Maryland	R P Smith	9	386	10	0	0	335	386	10	0	337
Maryland	R P Smith	11	2,582	66	0	46	2,295	2,592	65	0	2,264
Maryland	Riverside	1	216	5	0	0	168	216	5	0	169
Maryland	Riverside	2	186	5	0	0	170	186	5	0	171
Maryland	Riverside	3	404	10	0	0	351	404	10	0	353
Maryland	Riverside	4	520	13	0	0	451	520	13	0	454
Maryland	Riverside	5	337	9	0	0	292	337	9	0	294
Maryland	Vienna	8	2,075	53	0	1,829	3,629	2,075	52	0	1,813
Maryland	Westport	3	213	5	0	0	185	213	5	0	186
Maryland	Westport	4	295	7	0	0	257	295	7	0	258
Massachusetts	Brayton Point	1	9,682	245	0	0	8,411	9,682	245	0	8,465
Massachusetts	Brayton Point	2	10,182	258	0	0	8,834	10,182	257	0	8,884
Massachusetts	Brayton Point	3	21,263	539	0	0	18,487	21,263	537	0	18,580
Massachusetts	Brayton Point	4	13,256	336	0	538	12,040	13,256	335	0	11,578
Massachusetts	Canal	1	14,081	356	0	930	13,131	14,081	355	0	12,862
Massachusetts	Canal	2	20,568	521	0	0	17,847	20,568	519	0	17,968
Massachusetts	Cannon Street	3	427	11	0	0	371	427	11	0	373
Massachusetts	Cleary Flood	8	163	4	0	0	142	165	4	0	142
Massachusetts	Cleary Flood	9	1,799	46	0	1,105	2,689	1,799	45	0	1,572
Massachusetts	Kendall Square	1	235	5	0	0	186	235	5	0	187
Massachusetts	Kendall Square	2	237	5	0	0	208	237	5	0	208
Massachusetts	Kendall Square	3	481	12	0	0	418	481	12	0	420
Massachusetts	Mount Tom	1	6,412	162	0	0	5,565	6,412	162	0	5,601
Massachusetts	Mystic	4	2,979	75	0	0	2,585	2,979	75	0	2,602
Massachusetts	Mystic	5	3,534	89	0	0	3,067	3,534	89	0	3,087
Massachusetts	Mystic	6	3,515	89	0	0	3,049	3,515	89	0	3,070
Massachusetts	Mystic	7	19,704	499	0	0	17,097	19,704	497	0	17,211
Massachusetts	New Boston	1	7,037	178	0	0	6,109	7,037	178	0	6,148
Massachusetts	New Boston	2	7,226	183	0	0	6,270	7,226	182	0	6,312
Massachusetts	Salem Harbor	1	3,816	97	0	0	3,311	3,816	96	0	3,333
Massachusetts	Salem Harbor	2	3,895	99	0	0	3,379	3,895	98	0	3,402
Massachusetts	Salem Harbor	3	6,240	158	0	0	5,414	6,240	156	0	5,456
Massachusetts	Salem Harbor	4	14,083	356	0	248	12,487	14,083	356	0	12,301
Massachusetts	Somerset	1	0	0	0	0	0	0	0	0	0
Massachusetts	Somerset	2	0	0	0	0	0	0	0	0	0
Massachusetts	Somerset	3	0	0	0	0	0	0	0	0	0
Massachusetts	Somerset	4	0	0	0	0	0	0	0	0	0
Massachusetts	Somerset	5	0	0	0	0	0	0	0	0	0
Massachusetts	Somerset	6	0	0	0	0	0	0	0	0	0
Massachusetts	Somerset	7	3,180	80	0	0	2,742	3,180	80	0	2,780
Massachusetts	Somerset	8	4,554	115	0	0	3,952	4,554	115	0	3,979
Massachusetts	Waters River	**2	282	7	0	0	245	282	7	0	246
Massachusetts	West Springfield	1	432	11	0	0	375	432	11	0	377
Massachusetts	West Springfield	2	406	10	0	0	353	406	10	0	355
Massachusetts	West Springfield	3	3,441	87	0	0	2,987	3,441	87	0	3,005
Michigan	B C Cobb	1	504	13	0	701	1,136	504	13	0	440
Michigan	B C Cobb	2	542	13	0	755	1,225	542	13	0	474

TABLE 2. -- PHASE II ALLOWANCE ALLOCATIONS

State	Plant Name	Boiler [1]	Allowances for years 2000–2009					Allowances for years 2010 and thereafter			
			(A) [2] Unadjusted basic	(B) Special allowance reserve deduction	(C) Additional basic (§405(a)(3))	(D) Total Bonus	(E) [3] Total annual phase II	(F) [2] Unadjusted basic	(G) Special allowance reserve deduction	(H) Additional basic (§ 405(a)(3))	(I) [4] Total annual phase II
Michigan	B C Cobb	3	539	13	0	752	1,218	539	13	0	472
Michigan	B C Cobb	4	5,226	132	0	0	4,535	5,226	132	0	4,585
Michigan	B C Cobb	5	5,364	136	0	0	4,655	5,364	135	0	4,686
Michigan	Belle River	1	21,145	535	0	0	18,348	21,145	534	0	18,469
Michigan	Belle River	2	21,446	543	0	0	18,609	21,446	541	0	18,733
Michigan	Conners Creek	15	672	17	0	3,698	4,261	672	17	0	587
Michigan	Conners Creek	16	662	17	0	3,700	4,275	662	17	0	576
Michigan	Conners Creek	17	631	15	0	3,482	4,031	631	15	0	552
Michigan	Conners Creek	18	512	13	0	2,905	3,348	512	13	0	447
Michigan	Dan E Karn	1	8,926	226	0	0	7,745	8,926	225	0	7,797
Michigan	Dan E Karn	2	9,769	248	0	0	8,493	9,769	247	0	8,550
Michigan	Dan E Karn	3	1,167	30	0	0	1,012	1,167	29	0	1,020
Michigan	Dan E Karn	4	1,082	27	0	0	940	1,082	27	0	945
Michigan	Delray	7	0	0	0	0	0	0	0	0	0
Michigan	Delray	8	0	0	0	12	12	14	0	0	12
Michigan	Delray	9	0	0	0	0	0	0	0	0	0
Michigan	Delray	10	0	0	0	14	14	16	0	0	14
Michigan	Delray	11	0	0	0	0	0	0	0	0	0
Michigan	Delray	12	0	0	0	14	14	14	0	0	12
Michigan	Eckert Station	1	1,341	34	0	124	1,267	1,341	34	0	1,171
Michigan	Eckert Station	2	1,397	35	0	131	1,344	1,397	35	0	1,221
Michigan	Eckert Station	3	1,273	32	0	213	1,318	1,273	32	0	1,112
Michigan	Eckert Station	4	2,540	64	0	0	2,204	2,540	64	0	2,219
Michigan	Eckert Station	5	3,046	77	0	0	2,644	3,046	77	0	2,660
Michigan	Eckert Station	6	2,677	68	0	0	2,322	2,677	68	0	2,338
Michigan	Endicott Generating	1	2,069	52	0	0	1,796	2,069	52	0	1,807
Michigan	Erickson	1	7,595	192	0	0	6,591	7,595	192	0	6,634
Michigan	Greenwood	1	617	16	0	0	535	617	16	0	539
Michigan	Harbor Beach	1	1,627	41	0	2,096	3,508	1,627	41	0	1,421
Michigan	J B Sims	3	1,696	43	0	0	1,471	1,696	43	0	1,481
Michigan	J C Weadock	7	5,423	137	0	0	4,707	5,423	137	0	4,737
Michigan	J C Weadock	8	5,360	136	0	0	4,651	5,360	135	0	4,682
Michigan	J H Campbell	1	9,254	234	0	0	8,030	9,254	234	0	8,083
Michigan	J H Campbell	2	11,067	280	0	0	9,603	11,067	279	0	9,667
Michigan	J H Campbell	3	31,405	798	0	0	27,247	31,405	794	0	27,431
Michigan	J R Whiting	1	3,899	99	0	0	3,383	3,899	98	0	3,406
Michigan	J R Whiting	2	3,992	101	0	0	3,464	3,992	101	0	3,487
Michigan	J R Whiting	3	5,107	129	0	0	4,431	5,107	129	0	4,461
Michigan	James De Young	5	1,197	30	0	0	1,039	1,197	30	0	1,046
Michigan	Marysville	9	640	16	0	1,076	1,631	640	16	0	560
Michigan	Marysville	10	493	13	0	831	1,258	493	13	0	430
Michigan	Marysville	11	514	13	0	866	1,311	514	13	0	448
Michigan	Marysville	12	414	11	0	696	1,056	414	11	0	360
Michigan	Mistersky	5	293	7	0	0	255	293	7	0	256
Michigan	Mistersky	6	500	13	0	0	433	500	13	0	436
Michigan	Mistersky	7	555	14	0	0	481	555	14	0	485
Michigan	Monroe	1	27,243	690	0	0	23,636	27,243	688	0	23,796

TABLE 2. -- PHASE II ALLOWANCE ALLOCATIONS

State	Plant Name	Boiler [1]	Allowances for years 2000–2009					Allowances for years 2010 and thereafter			
			(A) [2] Unadjusted basic	(B) Special allowance reserve deduction	(C) Additional basic (§405(a)(3))	(D) Total Bonus	(E) [3] Total annual phase II	(F) [2] Unadjusted basic	(G) Special allowance reserve deduction	(H) Additional basic (§ 405(a)(3))	(I) [4] Total annual phase II
Michigan	Monroe	2	26,273	716	0	0	24,531	26,273	714	0	24,885
Michigan	Monroe	3	26,466	670	0	0	22,963	26,466	668	0	23,117
Michigan	Monroe	4	29,065	737	0	0	25,216	29,065	735	0	25,586
Michigan	Presque Isle	2	260	7	0	392	635	260	7	0	245
Michigan	Presque Isle	3	2,179	55	0	0	1,891	2,179	55	0	1,903
Michigan	Presque Isle	4	1,906	48	0	7	1,662	1,906	48	0	1,667
Michigan	Presque Isle	5	3,352	85	0	0	2,909	3,352	85	0	2,927
Michigan	Presque Isle	6	3,360	85	0	0	2,916	3,360	85	0	2,935
Michigan	Presque Isle	7	2,479	63	0	47	2,197	2,479	63	0	2,165
Michigan	Presque Isle	8	2,336	59	0	145	2,174	2,336	59	0	2,042
Michigan	Presque Isle	9	1,724	44	0	637	2,333	1,724	44	0	1,505
Michigan	River Rouge	1	90	2	0	0	79	90	2	0	79
Michigan	River Rouge	2	7,075	179	0	132	6,271	7,075	179	0	6,179
Michigan	River Rouge	3	10,402	263	0	0	9,026	10,402	263	0	9,089
Michigan	Shiras	3	572	14	0	0	496	572	14	0	500
Michigan	St Clair	1	4,169	106	0	0	3,635	4,169	106	0	3,659
Michigan	St Clair	2	4,049	103	0	0	3,513	4,049	102	0	3,537
Michigan	St Clair	3	4,027	102	0	0	3,495	4,027	102	0	3,517
Michigan	St Clair	4	3,880	98	0	0	3,366	3,880	98	0	3,388
Michigan	St Clair	5	0	0	0	0	0	0	0	0	0
Michigan	St Clair	6	8,390	212	0	0	7,281	8,390	212	0	7,328
Michigan	St Clair	7	15,378	389	0	0	13,344	15,378	388	0	13,433
Michigan	Trenton Channel	16	2,619	66	0	1,000	3,272	2,619	66	0	2,288
Michigan	Trenton Channel	17	610	16	0	233	761	610	16	0	532
Michigan	Trenton Channel	18	2,835	72	0	1,082	3,543	2,835	71	0	2,477
Michigan	Trenton Channel	19	556	14	0	212	696	556	14	0	486
Michigan	Trenton Channel	9A	16,577	420	0	0	14,364	16,577	418	0	14,480
Michigan	Wyandotte	5	625	15	0	412	655	625	15	0	546
Michigan	Wyandotte	7	621	15	0	409	648	621	15	0	543
Michigan	481 E. 48Th Street	**7	341	9	0	0	295	341	9	0	297
Michigan	481 E. 48Th Street	**8	341	9	0	0	295	341	9	0	297
Minnesota	Allen S King	1	17,857	452	0	0	15,485	17,857	451	0	15,587
Minnesota	Black Dog	1	378	10	0	1,583	1,911	378	10	0	330
Minnesota	Black Dog	2	522	13	0	3,226	3,676	522	13	0	456
Minnesota	Black Dog	3	1,129	29	0	1,287	2,266	1,129	29	0	986
Minnesota	Black Dog	4	2,430	62	0	1,929	4,036	2,430	61	0	2,123
Minnesota	Clay Boswell	1	1,424	36	0	560	1,816	1,424	36	0	1,244
Minnesota	Clay Boswell	2	1,355	34	0	614	1,760	1,355	34	0	1,184
Minnesota	Clay Boswell	3	11,273	285	0	0	9,782	11,273	285	0	9,849
Minnesota	Clay Boswell	4	11,797	298	0	0	10,236	11,797	298	0	10,304
Minnesota	Fox Lake	3	1,218	31	0	1,003	2,060	1,218	31	0	1,064
Minnesota	Future Base	**1	0	0	0	0	0	0	0	0	0
Minnesota	High Bridge	3	907	23	0	1,324	2,110	907	23	0	792
Minnesota	High Bridge	4	701	18	0	845	1,453	701	18	0	612
Minnesota	High Bridge	5	1,240	31	0	1,109	2,165	1,240	31	0	1,083
Minnesota	High Bridge	6	2,116	54	0	0	1,836	2,116	53	0	1,849
Minnesota	Hoot Lake	2	354	9	0	932	1,239	354	9	0	309

TABLE 2. -- PHASE II ALLOWANCE ALLOCATIONS

State	Plant Name	Boiler [1]	Allowances for years 2000-2009					Allowances for years 2010 and thereafter			
			(A) [2] Unadjusted basic	(B) Special allowance reserve deduction	(C) Additional basic (§405(a)(3))	(D) Total Bonus	(E) [3] Total annual phase II	(F) [2] Unadjusted basic	(G) Special allowance reserve deduction	(H) Additional basic (§ 405(a)(3))	(I) [4] Total annual phase II
Minnesota	Hoot Lake	3	1,229	31	0	903	1,869	1,229	31	0	1,074
Minnesota	M L Hibbard	3	34	1	0	957	987	34	1	0	30
Minnesota	M L Hibbard	4	11	0	0	1,084	1,094	11	0	0	10
Minnesota	Minnesota Valley	3	71	2	0	876	938	71	2	0	62
Minnesota	Na 1 -- 7237	**2	0	0	0	0	0	0	0	0	0
Minnesota	Northeast Station	NEPP	1,203	30	0	0	1,044	1,203	30	0	1,051
Minnesota	Riverside	6	260	7	0	2,849	3,075	260	7	0	227
Minnesota	Riverside	7	103	3	0	1,249	1,338	103	3	0	90
Minnesota	Riverside	8	4,310	109	0	1,296	5,036	4,310	109	0	3,764
Minnesota	Sherburne County	1	14,960	379	0	0	12,981	14,960	378	0	13,067
Minnesota	Sherburne County	2	15,065	381	0	0	13,073	15,065	380	0	13,159
Minnesota	Sherburne County	3	14,805	375	0	0	12,846	14,805	374	0	12,931
Minnesota	Silver Lake	4	3,560	91	0	0	3,106	3,560	90	0	3,127
Minnesota	Syl Laskin	1	366	9	0	1,371	1,689	366	9	0	320
Minnesota	Syl Laskin	2	158	4	0	1,510	1,647	158	4	0	136
Mississippi	Baxter Wilson	1	53	1	0	313	360	366	9	0	320
Mississippi	Baxter Wilson	2	4,072	103	0	0	3,533	4,072	103	0	3,557
Mississippi	Delta	1	19	0	0	9	28	28	1	0	24
Mississippi	Delta	2	33	1	0	21	50	54	1	0	48
Mississippi	Gerald Andrus	1	3,750	95	0	0	3,254	3,750	95	0	3,275
Mississippi	Jack Watson	1	197	5	0	0	171	197	5	0	172
Mississippi	Jack Watson	2	206	5	0	0	179	206	5	0	180
Mississippi	Jack Watson	3	312	8	0	0	270	312	8	0	272
Mississippi	Jack Watson	4	8,598	218	0	0	7,460	8,598	217	0	7,510
Mississippi	Jack Watson	5	17,615	446	0	0	15,284	17,615	445	0	15,388
Mississippi	Moselle	1	16	0	0	21	35	38	1	0	33
Mississippi	Moselle	2	39	1	0	42	76	80	2	0	70
Mississippi	Moselle	3	10	0	0	33	42	43	1	0	38
Mississippi	Moselle	**6	0	0	0	0	0	0	0	0	0
Mississippi	Moselle	**7	0	0	0	0	0	0	0	0	0
Mississippi	Natchez	1	2	0	0	0	2	3	0	0	3
Mississippi	R D Morrow	1	5,485	139	0	0	4,759	5,485	138	0	4,791
Mississippi	R D Morrow	2	6,003	152	0	0	5,209	6,003	152	0	5,243
Mississippi	Rex Brown	3	8	0	0	34	41	42	1	0	37
Mississippi	Rex Brown	4	2	0	0	157	159	159	4	0	139
Mississippi	Rex Brown	1A	0	0	0	6	6	6	0	0	5
Mississippi	Rex Brown	1B	0	0	0	6	6	6	0	0	5
Mississippi	Sweatt	1	89	2	0	0	78	89	2	0	78
Mississippi	Sweatt	2	98	2	0	0	86	98	2	0	86
Mississippi	Victor J Daniel Jr	1	11,312	286	0	1,328	11,145	11,312	286	0	9,880
Mississippi	Victor J Daniel Jr	2	16,315	413	0	0	14,156	16,315	412	0	14,250
Mississippi	Wright	W4	0	0	0	0	0	0	0	0	0
Missouri	Asbury	1	7,770	196	175	0	6,916	7,770	196	175	6,962
Missouri	Blue Valley	3	5,336	135	0	0	4,630	5,336	135	0	4,661
Missouri	Chamois	2	6,235	158	0	0	5,410	6,235	157	0	5,446
Missouri	Columbia	6	1,033	26	0	0	895	1,033	26	0	902
Missouri	Columbia	7	4,149	104	0	0	3,601	4,149	104	0	3,624

TABLE 2. -- PHASE II ALLOWANCE ALLOCATIONS

State	Plant Name	Boiler [1]	Allowances for years 2000–2009					Allowances for years 2010 and thereafter			
			(A) [2] Unadjusted basic	(B) Special allowance reserve deduction	(C) Additional basic (§405(a)(3))	(D) Total Bonus	(E) [3] Total annual phase II	(F) [2] Unadjusted basic	(G) Special allowance reserve deduction	(H) Additional basic (§ 405(a)(3))	(I) [4] Total annual phase II
Missouri	Columbia	6	142	3	0	0	125	142	3	0	124
Missouri	Combustion Turbine 1	**NA4	0	0	0	0	0	0	0	0	0
Missouri	Combustion Turbine 1	**NA5	0	0	0	0	0	0	0	0	0
Missouri	Combustion Turbine 1	**NA6	0	0	0	0	0	0	0	0	0
Missouri	Combustion Turbine 1	**NA7	0	0	0	0	0	0	0	0	0
Missouri	Combustion Turbine 3	**3	0	0	0	0	0	0	0	0	0
Missouri	Empire Energy Center	**4	0	0	0	0	0	0	0	0	0
Missouri	Empire Energy Center	**NA2	0	0	0	0	0	0	0	0	0
Missouri	Empire Energy Center	**NA3	0	0	0	0	0	0	0	0	0
Missouri	Grand Avenue	**7	12	0	0	0	11	12	0	0	11
Missouri	Grand Avenue	**9	14	0	0	0	13	14	0	0	13
Missouri	Hawthorn	5	14,041	355	0	485	12,669	14,041	354	0	12,265
Missouri	Iatan	1	16,520	469	0	0	16,070	16,520	468	0	16,176
Missouri	Iatan	**2	0	0	0	0	0	0	0	0	0
Missouri	James River	3	3,802	96	0	0	3,299	777	20	0	678
Missouri	James River	4	6,826	173	0	0	5,924	1,429	36	0	1,248
Missouri	James River	5	2,374	60	55	0	2,115	2,374	60	55	2,129
Missouri	James River	**GT2	691	16	0	0	599	691	17	0	604
Missouri	Jim Hill	**1	0	0	0	0	0	0	0	0	0
Missouri	Labadie	1	19,538	495	455	0	17,406	19,538	493	455	17,521
Missouri	Labadie	2	16,213	461	424	0	16,228	16,213	460	424	16,332
Missouri	Labadie	3	19,464	493	453	0	17,342	19,464	491	453	17,455
Missouri	Labadie	4	17,346	439	404	0	15,455	17,346	438	404	15,555
Missouri	Lake Road	6	692	16	0	0	600	692	17	0	606
Missouri	Meramec	1	1,174	30	0	1,716	2,736	1,174	30	0	1,025
Missouri	Meramec	2	1,261	32	0	1,675	2,769	1,261	32	0	1,101
Missouri	Meramec	3	2,694	68	0	3,700	6,036	2,694	68	0	2,353
Missouri	Meramec	4	2,914	74	0	4,625	7,153	2,914	74	0	2,545
Missouri	Montrose	1	3,549	90	83	0	3,162	3,549	90	83	3,183
Missouri	Montrose	2	3,935	100	92	0	3,506	3,935	99	92	3,529
Missouri	Montrose	3	4,841	123	113	0	4,312	4,841	122	113	4,342
Missouri	Na 1 -- 7223	**1	0	0	0	0	0	0	0	0	0
Missouri	Na 1 -- 7223	**2	0	0	0	0	0	0	0	0	0
Missouri	Na 1 -- 7223	**3	0	0	0	0	0	0	0	0	0
Missouri	Na 1 -- 7226	**1	0	0	0	0	0	0	0	0	0
Missouri	New Madrid	1	13,554	343	316	0	12,077	13,554	342	316	12,155
Missouri	New Madrid	2	15,593	395	363	0	13,893	15,593	394	363	13,963
Missouri	Rg 1 & 2	**1	0	0	0	0	0	0	0	0	0
Missouri	Rg 1 & 2	**2	0	0	0	0	0	0	0	0	0
Missouri	Rush Island	1	15,856	401	0	1,063	14,842	15,856	400	0	13,850
Missouri	Rush Island	2	17,702	448	0	160	15,520	17,702	447	0	15,462
Missouri	Sibley	1	593	15	0	0	514	593	15	0	518
Missouri	Sibley	2	726	16	0	0	632	726	16	0	636
Missouri	Sibley	3	8,498	215	196	0	7,572	8,498	215	196	7,620
Missouri	Sikeston	1	7,760	196	0	0	6,734	7,760	196	0	6,776
Missouri	Sioux	1	12,048	305	280	0	10,734	12,048	304	280	10,804
Missouri	Sioux	2	10,565	267	246	0	9,414	10,565	267	246	9,474

TABLE 2. -- PHASE II ALLOWANCE ALLOCATIONS

State	Plant Name	Boiler [1]	Allowances for years 2000-2009					Allowances for years 2010 and thereafter			
			(A) [2] Unadjusted basic	(B) Special allowance reserve deduction	(C) Additional basic (§405(a)(3))	(D) Total Bonus	(E) [3] Total annual phase II	(F) [2] Unadjusted basic	(G) Special allowance reserve deduction	(H) Additional basic (§ 405(a)(·))	(I) [4] Total annual phase II
Missouri	Southwest	1	4,707	119	0	64	4,149	4,707	119	0	4,111
Missouri	Thomas Hill	MB1	4,921	125	115	0	4,384	4,921	124	115	4,414
Missouri	Thomas Hill	MB2	8,272	209	193	0	7,371	8,272	209	193	7,416
Missouri	Thomas Hill	MB3	20,862	528	0	0	18,102	20,862	527	0	18,222
Montana	Colstrip	1	8,409	213	0	500	7,796	8,409	212	0	7,345
Montana	Colstrip	2	8,383	212	0	535	7,810	8,383	212	0	7,322
Montana	Colstrip	3	4,195	106	0	733	4,373	4,195	106	0	3,664
Montana	Colstrip	4	3,334	84	0	0	2,893	3,334	84	0	2,912
Montana	Frank Bird	1	0	0	0	0	0	0	0	0	0
Montana	J E Corette	2	5,571	141	0	186	5,020	5,571	141	0	4,866
Montana	Lewis & Clark	B1	1,601	41	0	43	1,432	1,601	40	0	1,399
Nebraska	Bluffs	4	21	1	0	0	18	21	1	0	18
Nebraska	C W Burdick	B-3	0	0	0	0	0	0	0	0	0
Nebraska	Canaday	1	716	18	0	0	621	716	18	0	625
Nebraska	Gerald Gentleman Sta	1	10,221	259	0	1,860	10,728	10,221	256	0	8,928
Nebraska	Gerald Gentleman Sta	2	20,060	508	0	0	17,424	20,060	507	0	17,539
Nebraska	Harold Kramer	1	3	0	0	35	36	3	0	0	3
Nebraska	Harold Kramer	2	3	0	0	37	40	3	0	0	3
Nebraska	Harold Kramer	3	191	5	0	884	1,051	191	5	0	166
Nebraska	Harold Kramer	4	225	6	0	1,881	2,077	225	6	0	196
Nebraska	Hastings Energy Ctr	1	2,668	68	0	0	2,314	2,668	67	0	2,331
Nebraska	Lon Wright	8	1,350	34	0	862	2,034	1,350	34	0	1,179
Nebraska	Na 1 -- 7019	**NA2	0	0	0	0	0	0	0	0	0
Nebraska	Nebraska City	1	15,077	382	0	0	13,062	15,077	381	0	13,169
Nebraska	North Omaha	1	1,192	30	0	1,345	2,379	1,192	30	0	1,041
Nebraska	North Omaha	2	1,841	47	0	1,677	3,274	1,841	46	0	1,609
Nebraska	North Omaha	3	2,167	55	0	1,312	3,192	2,167	55	0	1,883
Nebraska	North Omaha	4	2,869	73	0	1,339	3,627	2,869	72	0	2,506
Nebraska	North Omaha	5	3,471	88	0	1,610	4,621	3,471	88	0	3,031
Nebraska	Platte	1	3,345	85	0	0	2,902	3,345	84	0	2,922
Nebraska	Sheldon	1	904	23	0	1,377	2,161	904	23	0	769
Nebraska	Sheldon	2	964	24	0	1,436	2,273	964	24	0	842
Nevada	Clark	1	16	0	0	6	20	26	1	0	22
Nevada	Clark	2	298	8	0	13	271	298	8	0	260
Nevada	Clark	3	1	0	0	17	18	18	0	0	16
Nevada	Fort Churchill	1	406	10	0	15	368	406	10	0	355
Nevada	Fort Churchill	2	621	16	0	34	573	621	16	0	542
Nevada	Harry Allen	**1	0	0	0	0	0	0	0	0	0
Nevada	Harry Allen	**2	0	0	0	0	0	0	0	0	0
Nevada	Harry Allen	**3	0	0	0	0	0	0	0	0	0
Nevada	Harry Allen	**4	0	0	0	0	0	0	0	0	0
Nevada	Harry Allen	**GT3	0	0	0	0	0	0	0	0	0
Nevada	Harry Allen	**GT4	0	0	0	0	0	0	0	0	0
Nevada	Mohave	1	29,849	757	0	541	26,437	29,849	755	0	26,071
Nevada	Mohave	2	29,728	753	0	543	26,336	29,728	751	0	25,966
Nevada	North Valmy	1	7,493	190	0	403	6,904	7,493	189	0	6,545
Nevada	North Valmy	2	4,524	115	0	303	4,228	4,524	114	0	3,952

TABLE 2. -- PHASE II ALLOWANCE ALLOCATIONS

State	Plant Name	Boiler [1]	Allowances for years 2000–2009					Allowances for years 2010 and thereafter			
			(A) [2] Unadjusted basic	(B) Special allowance reserve deduction	(C) Additional basic (§405(a)(3))	(D) Total Bonus	(E) [3] Total annual phase II	(F) [2] Unadjusted basic	(G) Special allowance reserve deduction	(H) Additional basic (§ 405(a)(3))	(I) [4] Total annual phase II
Nevada	Reid Gardner	1	2,264	57	0	191	2,156	2,264	57	0	1,976
Nevada	Reid Gardner	2	2,311	58	0	180	2,185	2,311	58	0	2,019
Nevada	Reid Gardner	3	2,245	57	0	161	2,109	2,245	57	0	1,961
Nevada	Reid Gardner	4	2,872	68	0	476	2,794	2,872	67	0	2,334
Nevada	Sunrise	1	29	1	0	25	50	60	2	0	52
Nevada	Tracy	1	15	0	0	1	15	15	0	0	13
Nevada	Tracy	2	48	1	0	4	48	48	1	0	42
Nevada	Tracy	3	347	9	0	10	311	347	9	0	303
New Hampshire	Merrimack	1	4,900	124	0	0	4,252	4,900	124	0	4,280
New Hampshire	Merrimack	2	10,560	267	0	0	9,164	10,560	267	0	9,223
New Hampshire	Newington	1	12,107	306	0	1,068	11,574	12,107	306	0	10,575
New Hampshire	Schiller	4	1,643	42	0	76	1,502	1,643	41	0	1,436
New Hampshire	Schiller	5	1,481	38	0	162	1,446	1,481	37	0	1,294
New Hampshire	Schiller	6	1,676	48	0	0	1,628	1,676	47	0	1,641
New Jersey	B L England	1	4,355	110	0	0	3,779	4,355	110	0	3,804
New Jersey	B L England	2	5,634	143	0	0	4,888	5,634	142	0	4,921
New Jersey	B L England	3	2,765	70	0	0	2,400	2,765	70	0	2,415
New Jersey	Bergen	1	2,260	57	0	0	1,962	2,260	57	0	1,974
New Jersey	Bergen	2	2,335	59	0	0	2,026	2,335	59	0	2,039
New Jersey	Burlington	7	641	16	0	0	557	641	16	0	560
New Jersey	Butler	**4	0	0	0	0	0	0	0	0	0
New Jersey	Deepwater	1	1,330	34	0	0	1,154	1,330	34	0	1,161
New Jersey	Deepwater	3	12	0	0	0	11	12	0	0	11
New Jersey	Deepwater	4	67	2	0	0	58	67	2	0	58
New Jersey	Deepwater	5	6	0	0	0	5	6	0	0	5
New Jersey	Deepwater	6	67	2	0	0	58	67	2	0	58
New Jersey	Deepwater	8	3,137	79	0	0	2,722	3,137	79	0	2,740
New Jersey	Deepwater	9	2,073	52	0	0	1,800	2,073	52	0	1,811
New Jersey	Gilbert	01	69	2	0	0	60	69	2	0	60
New Jersey	Gilbert	02	43	2	0	0	37	43	2	0	37
New Jersey	Gilbert	03	799	20	0	0	694	799	20	0	698
New Jersey	Gilbert	04	685	17	0	0	595	685	17	0	599
New Jersey	Gilbert	05	681	17	0	0	592	681	17	0	595
New Jersey	Gilbert	06	677	17	0	0	588	677	17	0	591
New Jersey	Gilbert	07	692	18	0	0	600	692	17	0	605
New Jersey	Hudson	1	1,368	35	0	0	1,187	1,368	35	0	1,194
New Jersey	Hudson	2	17,350	439	0	788	15,643	17,350	438	0	15,155
New Jersey	Kearny	7	166	4	0	0	144	166	4	0	145
New Jersey	Kearny	8	175	4	0	0	152	175	4	0	153
New Jersey	Linden	2	736	19	0	0	638	736	19	0	642
New Jersey	Linden	4	482	12	0	0	419	482	12	0	421
New Jersey	Linden	11	1,106	28	0	0	960	1,106	28	0	966
New Jersey	Linden	12	759	19	0	0	659	759	19	0	663
New Jersey	Linden	13	1,002	25	0	0	870	1,002	25	0	876
New Jersey	Mercer	1	8,888	220	0	80	7,819	8,888	219	0	7,589
New Jersey	Mercer	2	7,992	202	0	445	7,361	7,992	202	0	6,981
New Jersey	Na 3 -- 7141	**1	0	0	0	0	0	0	0	0	0

TABLE 2. -- PHASE II ALLOWANCE ALLOCATIONS

State	Plant Name	Boiler [1]	Allowances for years 2000–2009					Allowances for years 2010 and thereafter			
			(A) [2] Unadjusted basic	(B) Special allowance reserve deduction	(C) Additional basic (§405(a)(3))	(D) Total Bonus	(E) [3] Total annual phase II	(F) [2] Unadjusted basic	(G) Special allowance reserve deduction	(H) Additional basic (§ 405(a)(3))	(I) [4] Total annual phase II
New Jersey	Na 3 -- 7141	**2	0	0	0	0	0	0	0	0	0
New Jersey	Na 4 -- 7142	**1	0	0	0	0	0	0	0	0	0
New Jersey	Na 5 -- 7217	**1	0	0	0	0	0	0	0	0	0
New Jersey	Na 5 -- 7217	**2	0	0	0	0	0	0	0	0	0
New Jersey	Na 6 -- 7218	**1	0	0	0	0	0	0	0	0	0
New Jersey	Na 6 -- 7218	**2	0	0	0	0	0	0	0	0	0
New Jersey	Sayreville	02	2	0	0	0	2	2	0	0	2
New Jersey	Sayreville	03	2	0	0	0	2	2	0	0	2
New Jersey	Sayreville	05	46	0	0	0	41	46	0	0	41
New Jersey	Sayreville	06	42	0	0	0	39	42	0	0	37
New Jersey	Sayreville	07	875	22	0	0	759	875	22	0	764
New Jersey	Sayreville	08	1,019	26	0	0	884	1,019	26	0	890
New Jersey	Sewaren	1	133	3	0	0	116	133	3	0	117
New Jersey	Sewaren	2	389	10	0	0	338	389	10	0	340
New Jersey	Sewaren	3	290	7	0	0	252	290	7	0	254
New Jersey	Sewaren	4	656	17	0	0	569	656	17	0	573
New Jersey	Sewaren	5	0	0	0	0	0	0	0	0	0
New Jersey	Werner	04	223	6	0	0	193	223	6	0	194
New Mexico	Cunningham	121B	2	0	0	40	42	50	1	0	44
New Mexico	Cunningham	122B	4	0	0	265	269	232	6	0	203
New Mexico	Escalante	1	1,672	42	0	410	1,862	1,672	42	0	1,461
New Mexico	Escalante	**2	0	0	0	0	0	0	0	0	0
New Mexico	Four Corners	1	3,790	96	0	277	3,585	3,790	96	0	3,310
New Mexico	Four Corners	2	3,791	96	0	272	3,561	3,791	96	0	3,311
New Mexico	Four Corners	3	4,747	120	0	323	4,443	4,747	120	0	4,146
New Mexico	Four Corners	4	13,552	343	0	647	12,406	13,552	342	0	11,837
New Mexico	Four Corners	5	14,037	355	0	990	13,170	14,037	354	0	12,261
New Mexico	Maddox	**3	97	2	0	0	85	97	2	0	85
New Mexico	Maddox	051B	2	0	0	168	170	140	4	0	122
New Mexico	North Lovington	S2	0	0	0	0	0	0	0	0	0
New Mexico	Person	3	0	0	0	0	0	0	0	0	0
New Mexico	Person	4	0	0	0	0	0	0	0	0	0
New Mexico	Reeves	1	0	0	0	4	4	7	0	0	6
New Mexico	Reeves	2	0	0	0	7	7	5	0	0	4
New Mexico	Reeves	3	104	3	0	13	103	115	3	0	100
New Mexico	Rio Grande	6	0	0	0	3	3	5	0	0	4
New Mexico	Rio Grande	7	0	0	0	1	1	1	0	0	1
New Mexico	Rio Grande	8	1	0	0	79	80	71	2	0	62
New Mexico	San Juan	1	8,423	213	0	570	7,878	8,423	213	0	7,357
New Mexico	San Juan	2	6,171	156	0	522	5,877	6,171	156	0	5,390
New Mexico	San Juan	3	14,832	375	0	897	13,768	14,832	374	0	12,956
New Mexico	San Juan	4	13,917	352	0	867	12,844	13,917	351	0	12,156
New York	Albany	1	2,057	52	0	0	1,786	2,057	52	0	1,797
New York	Albany	2	1,777	45	0	0	1,542	1,777	45	0	1,552
New York	Albany	3	1,821	46	0	0	1,580	1,821	46	0	1,591
New York	Albany	4	1,926	49	0	0	1,672	1,926	49	0	1,684
w York	Arthur Kill	20	1,689	43	0	0	1,465	1,689	43	0	1,475

TABLE 2. -- PHASE II ALLOWANCE ALLOCATIONS

State	Plant Name	Boiler [1]	Allowances for years 2000–2009					Allowances for years 2010 and thereafter			
			(A) [2] Unadjusted basic	(B) Special allowance reserve deduction	(C) Additional basic (§405(a)(3))	(D) Total Bonus	(E) [3] Total annual phase II	(F) [2] Unadjusted basic	(G) Special allowance reserve deduction	(H) Additional basic (§ 405(a)(3))	(I) [4] Total annual phase II
New York	Arthur Kill	30	2,705	68	0	0	2,348	2,705	68	0	2,363
New York	Astoria	10	1,369	35	0	0	1,206	1,369	35	0	1,213
New York	Astoria	20	1,775	45	0	0	1,541	1,775	45	0	1,550
New York	Astoria	30	3,458	87	0	0	3,000	3,458	87	0	3,019
New York	Astoria	40	2,715	69	0	0	2,356	2,715	69	0	2,371
New York	Astoria	50	3,085	78	0	0	2,677	3,085	78	0	2,695
New York	Bowline Point	1	4,845	123	0	0	4,203	4,845	122	0	4,232
New York	Bowline Point	2	4,846	123	0	0	4,204	4,846	122	0	4,233
New York	C R Huntley	63	2,812	71	0	196	2,636	2,812	71	0	2,456
New York	C R Huntley	64	2,993	76	0	45	2,642	2,993	76	0	2,614
New York	C R Huntley	65	3,077	78	0	0	2,670	3,077	78	0	2,687
New York	C R Huntley	66	3,118	79	0	0	2,706	3,118	79	0	2,723
New York	C R Huntley	67	6,599	167	0	0	5,727	6,599	167	0	5,764
New York	C R Huntley	68	6,149	156	0	0	5,335	6,149	155	0	5,371
New York	Charles Poletti	001	7,357	186	0	0	6,385	7,357	186	0	6,426
New York	Danskammer	1	1,083	27	0	0	941	1,083	27	0	946
New York	Danskammer	2	1,051	27	0	0	912	1,051	27	0	918
New York	Danskammer	3	3,576	91	0	0	3,102	3,576	90	0	3,124
New York	Danskammer	4	6,891	174	0	0	5,980	6,891	174	0	6,019
New York	Dunkirk	1	3,248	82	0	0	2,819	3,248	82	0	2,837
New York	Dunkirk	2	3,690	93	0	0	3,202	3,690	93	0	3,223
New York	Dunkirk	3	6,046	153	0	0	5,246	6,046	153	0	5,281
New York	Dunkirk	4	6,749	171	0	0	5,856	6,749	170	0	5,895
New York	E F Barrett	10	2,710	69	0	0	2,351	2,710	68	0	2,368
New York	E F Barrett	20	2,671	68	0	0	2,317	2,671	67	0	2,333
New York	East River	50	1,598	40	0	0	1,385	1,598	40	0	1,394
New York	East River	60	1,633	41	0	0	1,418	1,633	41	0	1,427
New York	East River	70	1,181	30	0	0	1,024	1,181	30	0	1,031
New York	Far Rockaway	40	537	14	0	0	465	537	14	0	469
New York	Glenwood	40	1,072	27	0	0	931	1,072	27	0	936
New York	Glenwood	50	1,032	26	0	0	896	1,032	26	0	901
New York	Goudey	11	905	23	0	0	785	905	23	0	790
New York	Goudey	12	892	23	0	0	773	892	23	0	779
New York	Goudey	13	3,756	95	0	0	3,260	3,756	95	0	3,281
New York	Greenidge	4	1,121	28	0	0	973	1,121	28	0	979
New York	Greenidge	5	1,119	28	0	0	971	1,119	28	0	978
New York	Greenidge	6	3,839	92	0	0	3,156	3,839	92	0	3,178
New York	Hickling	1	808	20	0	16	720	808	20	0	706
New York	Hickling	2	808	20	0	16	720	808	20	0	706
New York	Hickling	3	969	25	0	47	887	969	24	0	847
New York	Hickling	4	1,010	26	0	49	925	1,010	26	0	882
New York	Jennison	1	684	17	0	51	645	684	17	0	598
New York	Jennison	2	712	18	0	53	671	712	18	0	622
New York	Jennison	3	714	18	0	99	718	714	18	0	624
New York	Jennison	4	714	18	0	99	718	714	18	0	624
New York	Lovett	3	258	7	0	0	223	258	7	0	225
New York	Lovett	4	5,222	132	0	0	4,532	5,222	132	0	4,561

TABLE 2. -- PHASE II ALLOWANCE ALLOCATIONS

State	Plant Name	Boiler [1]	Allowances for years 2000–2009					Allowances for years 2010 and thereafter			
			(A) [2] Unadjusted basic	(B) Special allowance reserve deduction	(C) Additional basic (§405(a)(3))	(D) Total Bonus	(E) [3] Total annual phase II	(F) [2] Unadjusted basic	(G) Special allowance reserve deduction	(H) Additional basic (§ 405(a)(3))	(I) [4] Total annual phase II
New York	Lovett	5	5,700	144	0	0	4,946	5,700	144	0	4,979
New York	Milliken	1	5,631	143	0	0	4,885	5,631	142	0	4,919
New York	Milliken	2	5,959	151	0	0	5,171	5,959	150	0	5,205
New York	Northport	1	9,510	241	0	0	8,252	9,510	240	0	8,307
New York	Northport	2	11,575	293	0	0	10,044	11,575	292	0	10,111
New York	Northport	3	12,710	322	0	0	11,028	12,710	321	0	11,102
New York	Northport	4	6,620	168	0	0	5,743	6,620	167	0	5,782
New York	Oswego	1	0	0	0	0	0	0	0	0	0
New York	Oswego	2	0	0	0	0	0	0	0	0	0
New York	Oswego	3	103	3	0	0	89	103	3	0	90
New York	Oswego	4	455	12	0	0	395	455	11	0	398
New York	Oswego	5	9,499	240	0	8,929	17,172	9,499	240	0	8,297
New York	Oswego	6	5,494	139	0	0	4,767	5,494	139	0	4,799
New York	Port Jefferson	1	543	14	0	0	470	543	14	0	474
New York	Port Jefferson	2	569	14	0	0	494	569	14	0	497
New York	Port Jefferson	3	5,025	127	0	0	4,361	5,025	127	0	4,389
New York	Port Jefferson	4	5,920	150	0	0	5,137	5,920	149	0	5,171
New York	Ravenswood	10	3,617	92	0	0	3,138	3,617	91	0	3,160
New York	Ravenswood	20	3,060	77	0	0	2,656	3,060	77	0	2,673
New York	Ravenswood	30	5,704	144	0	0	4,950	5,704	144	0	4,982
New York	Rochester 3	1	0	0	0	0	0	0	0	0	0
New York	Rochester 3	2	0	0	0	0	0	0	0	0	0
New York	Rochester 3	3	2	0	0	0	2	2	0	0	2
New York	Rochester 3	4	0	0	0	0	0	0	0	0	0
New York	Rochester 3	7	71	2	0	139	201	71	2	0	62
New York	Rochester 3	8	0	0	0	0	0	0	0	0	0
New York	Rochester 3	12	2,593	66	0	0	2,250	2,593	65	0	2,265
New York	Rochester 7	1	1,249	32	0	0	1,084	1,249	32	0	1,090
New York	Rochester 7	2	1,858	47	0	0	1,612	1,858	47	0	1,623
New York	Rochester 7	3	1,813	46	0	0	1,573	1,813	46	0	1,583
New York	Rochester 7	4	2,529	64	0	0	2,194	2,529	64	0	2,209
New York	Roseton	1	16,577	420	0	1,077	15,461	16,577	418	0	14,480
New York	Roseton	2	14,786	374	0	1,972	14,802	14,786	373	0	12,915
New York	S A Carlson	9	759	19	0	0	659	759	19	0	663
New York	S A Carlson	10	768	19	0	0	667	768	19	0	671
New York	S A Carlson	11	486	13	0	0	421	486	12	0	425
New York	S A Carlson	12	1,457	36	0	0	1,266	1,457	36	0	1,273
New York	Somerset	1	15,871	402	0	0	13,772	15,871	401	0	13,862
New York	Waterside	41	288	7	0	0	251	288	7	0	252
New York	Waterside	42	283	7	0	0	246	283	7	0	247
New York	Waterside	51	476	13	0	0	413	476	13	0	415
New York	Waterside	52	476	12	0	0	414	476	12	0	415
New York	Waterside	61	492	12	0	0	428	492	12	0	430
New York	Waterside	62	578	14	0	0	503	578	14	0	505
New York	Waterside	80	1,288	33	0	0	1,118	1,288	33	0	1,125
New York	Waterside	90	1,409	35	0	0	1,223	1,409	35	0	1,231
New York	59Th Street	110	73	2	0	0	64	73	2	0	64

TABLE 2. -- PHASE II ALLOWANCE ALLOCATIONS

State	Plant Name	Boiler [1]	Allowances for years 2000–2009					Allowances for years 2010 and thereafter			
			(A) [2] Unadjusted basic	(B) Special allowance reserve deduction	(C) Additional basic (§405(a)(3))	(D) Total Bonus	(E) [3] Total annual phase II	(F) [2] Unadjusted basic	(G) Special allowance reserve deduction	(H) Additional basic (§ 405(a)(3))	(I) [4] Total annual phase II
New York	74Th Street	120	511	13	0	0	443	511	13	0	447
New York	74Th Street	121	513	13	0	0	445	513	13	0	448
New York	74Th Street	122	511	13	0	0	443	511	13	0	447
North Carolina	Asheville	1	7,567	199	0	0	6,569	7,567	191	0	6,810
North Carolina	Asheville	2	6,013	158	0	0	5,218	6,013	152	0	5,291
North Carolina	Belews Creek	1	35,325	895	0	0	30,648	35,325	893	0	30,855
North Carolina	Belews Creek	2	37,208	943	0	0	32,282	37,208	940	0	32,500
North Carolina	Buck	5	2	0	0	1,029	1,031	2	0	0	2
North Carolina	Buck	6	1	0	0	588	589	1	0	0	1
North Carolina	Buck	7	399	10	0	714	1,053	396	10	0	343
North Carolina	Buck	8	686	17	0	1,721	2,317	686	17	0	600
North Carolina	Buck	9	2,074	53	0	1,056	2,855	2,074	52	0	1,812
North Carolina	Cape Fear	3	0	0	0	599	599	0	0	0	0
North Carolina	Cape Fear	4	0	0	0	599	599	0	0	0	0
North Carolina	Cape Fear	5	3,303	84	0	492	3,357	3,303	83	0	2,885
North Carolina	Cape Fear	6	3,378	86	0	957	3,886	3,378	85	0	2,951
North Carolina	Cliffside	1	1	0	0	897	898	1	0	0	1
North Carolina	Cliffside	2	1	0	0	671	672	1	0	0	1
North Carolina	Cliffside	3	24	1	0	1,270	1,291	24	1	0	21
North Carolina	Cliffside	4	20	1	0	1,286	1,305	20	1	0	17
North Carolina	Cliffside	5	13,530	342	0	2,199	13,940	13,530	342	0	11,616
North Carolina	Dan River	1	415	11	0	1,546	1,906	415	10	0	363
North Carolina	Dan River	2	381	10	0	2,446	2,776	381	10	0	332
North Carolina	Dan River	3	681	17	0	2,196	2,768	681	17	0	595
North Carolina	G G Allen	1	35	1	0	2,396	2,427	35	1	0	30
North Carolina	G G Allen	2	39	1	0	2,779	2,813	39	1	0	34
North Carolina	G G Allen	3	5,123	130	0	1,636	6,082	5,123	129	0	4,475
North Carolina	G G Allen	4	3,659	93	0	2,542	5,718	3,659	92	0	3,196
North Carolina	G G Allen	5	4,432	112	0	2,093	5,940	4,432	112	0	3,871
North Carolina	L V Sutton	1	824	21	0	1,330	2,045	824	21	0	720
North Carolina	L V Sutton	2	1,360	34	0	1,080	2,261	1,360	34	0	1,188
North Carolina	L V Sutton	3	5,831	148	0	3,195	8,253	5,831	147	0	5,093
North Carolina	Lee	1	741	19	0	987	1,830	741	19	0	647
North Carolina	Lee	2	948	24	0	855	1,877	948	24	0	828
North Carolina	Lee	3	5,538	140	0	918	5,723	5,538	140	0	4,837
North Carolina	Marshall	1	8,225	208	0	1,567	8,704	8,225	208	0	7,184
North Carolina	Marshall	2	9,292	235	0	1,133	9,190	9,292	235	0	8,116
North Carolina	Marshall	3	17,013	431	0	976	15,738	17,013	429	0	14,861
North Carolina	Marshall	4	15,255	386	0	1,785	15,023	15,255	385	0	13,325
North Carolina	Mayo	1A	14,609	370	0	0	12,677	14,609	369	0	12,760
North Carolina	Mayo	1B	14,609	370	0	0	12,677	14,609	369	0	12,760
North Carolina	Riverbend	7	1,539	39	0	605	2,140	1,539	39	0	1,344
North Carolina	Riverbend	8	1,420	36	0	870	2,103	1,420	36	0	1,240
North Carolina	Riverbend	9	406	10	0	1,911	2,264	406	10	0	355
North Carolina	Riverbend	10	1,339	34	0	1,454	2,616	1,339	34	0	1,169
North Carolina	Roxboro	1	12,671	321	0	0	10,995	12,671	320	0	11,068
North Carolina	Roxboro	2	22,445	569	0	0	19,476	22,445	567	0	19,605

TABLE 2. -- PHASE II ALLOWANCE ALLOCATIONS

State	Plant Name	Boiler [1]	Allowances for years 2000–2009					Allowances for years 2010 and thereafter			
			(A) [2] Unadjusted basic	(B) Special allowance reserve deduction	(C) Additional basic (§405(a)(3))	(D) Total Bonus	(E) [3] Total annual phase II	(F) [2] Unadjusted basic	(G) Special allowance reserve deduction	(H) Additional basic (§ 405(a)(3))	(I) [4] Total annual phase II
North Carolina	Roxboro	3A	10,154	257	0	210	9,021	10,154	256	0	8,870
North Carolina	Roxboro	3B	10,154	257	0	210	9,021	10,154	256	0	8,870
North Carolina	Roxboro	4A	11,892	301	0	0	10,319	11,892	300	0	10,387
North Carolina	Roxboro	4B	11,892	301	0	0	10,319	11,892	300	0	10,387
North Carolina	W H Weatherspoon	1	533	13	0	656	1,116	533	13	0	486
North Carolina	W H Weatherspoon	2	540	14	0	653	1,121	540	14	0	471
North Carolina	W H Weatherspoon	3	1,069	27	0	690	1,618	1,069	27	0	934
North Dakota	Antelope Valley	B1	13,652	346	0	0	11,846	13,652	345	0	11,924
North Dakota	Antelope Valley	B2	12,720	322	0	0	11,037	12,720	321	0	11,111
North Dakota	Coal Creek	1	26,637	674	0	0	23,111	26,637	672	0	23,267
North Dakota	Coal Creek	2	24,212	613	0	0	21,007	24,212	611	0	21,149
North Dakota	Coyote	B1	18,490	468	0	0	16,044	18,490	467	0	16,150
North Dakota	Dakotas	**1	0	0	0	0	0	0	0	0	0
North Dakota	Leland Olds	1	10,404	263	0	0	9,027	10,404	263	0	9,087
North Dakota	Leland Olds	2	30,171	765	0	0	26,175	30,171	763	0	26,352
North Dakota	Milton R Young	B1	14,799	375	0	0	12,841	14,799	374	0	12,926
North Dakota	Milton R Young	B2	18,152	459	0	0	15,751	18,152	458	0	15,855
North Dakota	R M Heskett	B2	3,659	93	0	0	3,174	3,659	92	0	3,196
North Dakota	Stanton	1	8,510	215	0	0	7,385	8,510	215	0	7,433
North Dakota	Stanton	10	1,525	39	0	0	1,322	1,525	39	0	1,332
Ohio	Acme	9	1	0	0	0	1	1	0	0	1
Ohio	Acme	11	7	0	0	0	7	7	0	0	7
Ohio	Acme	13	10	0	0	1,837	1,846	10	0	0	9
Ohio	Acme	14	15	0	0	2,505	2,519	15	0	0	14
Ohio	Acme	15	21	0	0	3,346	3,365	21	0	0	19
Ohio	Acme	16	2,316	59	0	394	2,403	2,316	58	0	2,023
Ohio	Acme	91	888	22	0	1,236	2,007	888	22	0	776
Ohio	Acme	92	794	20	0	1,105	1,794	794	20	0	694
Ohio	Ashtabula	7	8,036	203	187	0	7,160	8,036	203	187	7,206
Ohio	Ashtabula	8	2,669	67	0	0	2,317	2,669	66	0	2,332
Ohio	Ashtabula	9	2,276	58	0	0	1,974	2,276	58	0	1,987
Ohio	Ashtabula	10	2,054	52	0	0	1,779	2,054	52	0	1,794
Ohio	Ashtabula	11	2,160	54	0	0	1,873	2,160	54	0	1,886
Ohio	Avon Lake	9	2,933	74	0	0	2,545	2,933	74	0	2,562
Ohio	Avon Lake	10	2,575	65	0	0	2,234	2,575	65	0	2,249
Ohio	Avon Lake	11	5,594	142	130	0	4,984	5,594	141	130	5,016
Ohio	Avon Lake	12	16,918	428	394	0	15,074	16,918	427	394	15,171
Ohio	Bay Shore	1	5,392	136	0	0	4,680	5,392	136	0	4,710
Ohio	Bay Shore	2	5,136	130	0	0	4,456	5,136	130	0	4,486
Ohio	Bay Shore	3	4,887	124	0	0	4,240	4,887	123	0	4,269
Ohio	Bay Shore	4	8,042	204	0	0	6,976	8,042	203	0	7,024
Ohio	Cardinal	1	16,449	416	383	0	14,657	16,449	415	383	14,751
Ohio	Cardinal	2	18,395	466	428	0	16,389	18,395	464	428	16,496
Ohio	Cardinal	3	19,104	484	0	583	17,159	19,104	482	0	16,687
Ohio	Conesville	1	2,019	51	47	0	1,799	2,019	51	47	1,811
Ohio	Conesville	2	2,349	59	55	0	2,094	2,349	59	55	2,107
Ohio	Conesville	3	2,638	67	61	0	2,350	2,638	67	61	2,365

TABLE 2. -- PHASE II ALLOWANCE ALLOCATIONS

State	Plant Name	Boiler [1]	Allowances for years 2000–2009					Allowances for years 2010 and thereafter			
			(A) [2] Unadjusted basic	(B) Special allowance reserve deduction	(C) Additional basic (§405(a)(3))	(D) Total Bonus	(E) [3] Total annual phase II	(F) [2] Unadjusted basic	(G) Special allowance reserve deduction	(H) Additional basic (§ 405(a)(3))	(I) [4] Total annual phase II
Ohio	Conesville	4	23,410	593	545	0	20,856	23,410	591	545	20,993
Ohio	Conesville	5	8,190	207	0	1,858	8,965	8,190	207	0	7,153
Ohio	Conesville	6	9,070	230	0	1,457	9,326	9,070	229	0	7,922
Ohio	Dover	**6	175	4	0	0	152	175	4	0	153
Ohio	Eastlake	1	3,746	95	87	0	3,338	3,746	95	87	3,359
Ohio	Eastlake	2	4,146	105	97	0	3,694	4,146	105	97	3,718
Ohio	Eastlake	3	4,806	122	112	0	4,284	4,806	121	112	4,312
Ohio	Eastlake	4	6,966	176	162	0	6,207	6,966	176	162	6,246
Ohio	Eastlake	5	18,483	468	430	0	16,468	18,483	467	430	16,574
Ohio	Edgewater	11	1,003	25	0	0	871	481	12	0	420
Ohio	Edgewater	12	1,081	27	0	0	939	519	13	0	453
Ohio	Edgewater	13	2,426	61	56	0	2,162	2,426	61	56	2,175
Ohio	Gen J M Gavin	1	37,957	962	885	0	33,817	37,957	959	885	34,039
Ohio	Gen J M Gavin	2	38,668	980	901	0	34,450	38,668	977	901	34,676
Ohio	Gorge	25	1,711	43	0	0	1,485	821	21	0	717
Ohio	Gorge	26	1,917	49	0	0	1,662	920	23	0	804
Ohio	Hamilton	9	1,326	34	0	505	1,655	1,326	33	0	1,159
Ohio	J M Stuart	1	22,433	568	0	0	19,465	22,433	566	0	19,595
Ohio	J M Stuart	2	21,267	538	0	0	18,453	21,267	537	0	18,576
Ohio	J M Stuart	3	21,067	534	0	0	18,297	21,067	532	0	18,419
Ohio	J M Stuart	4	22,267	564	0	0	19,338	22,267	563	0	19,467
Ohio	Killen Station	2	19,344	490	0	0	16,784	19,344	488	0	16,897
Ohio	Kyger Creek	1	9,256	234	0	0	8,032	9,256	234	0	8,084
Ohio	Kyger Creek	2	8,909	226	0	0	7,730	8,909	225	0	7,782
Ohio	Kyger Creek	3	8,597	218	0	0	7,459	8,597	217	0	7,509
Ohio	Kyger Creek	4	8,981	227	0	0	7,794	8,981	227	0	7,844
Ohio	Kyger Creek	5	8,997	228	0	0	7,808	8,997	227	0	7,859
Ohio	Lake Road	6	0	0	0	1,340	1,340	0	0	0	0
Ohio	Lake Shore	16	5,720	145	0	1,027	5,990	5,720	144	0	4,997
Ohio	Lake Shore	91	53	1	0	0	47	53	1	0	47
Ohio	Lake Shore	92	95	2	0	0	84	95	2	0	83
Ohio	Lake Shore	93	74	2	0	0	65	74	2	0	65
Ohio	Lake Shore	94	122	3	0	0	106	122	3	0	107
Ohio	Miami Fort	6	5,464	138	127	0	4,868	5,464	138	127	4,900
Ohio	Miami Fort	7	18,485	468	430	0	16,469	18,485	467	430	16,576
Ohio	Miami Fort	8	20,834	527	0	0	18,079	20,834	526	0	18,198
Ohio	Miami Fort	5–1	159	4	4	0	142	159	4	4	143
Ohio	Miami Fort	5–2	159	4	4	0	142	159	4	4	143
Ohio	Muskingum River	1	7,140	181	166	0	6,361	7,140	180	166	6,403
Ohio	Muskingum River	2	6,800	172	158	0	6,059	6,800	172	158	6,097
Ohio	Muskingum River	3	6,698	170	156	0	5,968	6,698	169	156	6,007
Ohio	Muskingum River	4	5,653	143	132	0	5,037	5,653	143	132	5,069
Ohio	Muskingum River	5	19,423	492	452	0	17,306	19,423	490	452	17,418
Ohio	Niles	1	3,333	84	78	0	2,970	3,333	84	78	2,989
Ohio	Niles	2	4,367	111	102	0	3,891	4,367	110	102	3,917
Ohio	O H Hutchings	H–1	453	11	0	1,339	1,733	453	11	0	396
Ohio	O H Hutchings	H–2	353	9	0	1,362	1,666	353	9	0	306

TABLE 2. -- PHASE II ALLOWANCE ALLOCATIONS

State	Plant Name	Boiler [1]	Allowances for years 2000–2009					Allowances for years 2010 and thereafter			
			(A) [2] Unadjusted basic	(B) Special allowance reserve deduction	(C) Additional basic (§405(a)(3))	(D) Total Bonus	(E) [3] Total annual phase II	(F) [2] Unadjusted basic	(G) Special allowance reserve deduction	(H) Additional basic (§ 405(a)(3))	(I) [4] Total annual phase II
Ohio	O H Hutchings	H-3	667	17	0	1,019	1,596	667	17	0	562
Ohio	O H Hutchings	H-4	732	19	0	963	1,616	732	18	0	640
Ohio	O H Hutchings	H-5	586	15	0	1,118	1,626	586	15	0	512
Ohio	O H Hutchings	H-6	424	11	0	1,289	1,657	424	11	0	370
Ohio	Picway	9	2,368	60	55	0	2,110	2,368	60	55	2,123
Ohio	Poston	1	900	23	0	0	780	900	23	0	786
Ohio	Poston	2	836	21	0	0	725	836	21	0	730
Ohio	Poston	3	1,093	28	0	0	948	1,093	28	0	954
Ohio	R E Burger	1	1,409	36	0	0	1,223	676	17	0	591
Ohio	R E Burger	2	1,378	35	0	0	1,196	661	17	0	577
Ohio	R E Burger	3	1,423	36	0	0	1,235	683	17	0	597
Ohio	R E Burger	4	1,457	37	0	0	1,265	700	18	0	611
Ohio	R E Burger	5	1,479	37	34	0	1,319	1,479	37	34	1,326
Ohio	R E Burger	6	1,474	37	34	0	1,314	1,474	37	34	1,322
Ohio	R E Burger	7	5,174	131	120	0	4,609	5,174	131	120	4,639
Ohio	R E Burger	8	5,967	151	139	0	5,317	5,967	151	139	5,351
Ohio	Refuse & Coal	001	486	12	0	0	423	486	12	0	426
Ohio	Refuse & Coal	002	435	12	0	0	378	435	12	0	376
Ohio	Refuse & Coal	003	459	12	0	0	399	459	12	0	402
Ohio	Refuse & Coal	004	501	12	0	0	432	501	12	0	436
Ohio	Refuse & Coal	005	429	12	0	0	372	429	12	0	375
Ohio	Refuse & Coal	006	417	12	0	0	360	417	12	0	363
Ohio	Richard Gorsuch	1	7,030	176	0	0	6,096	7,030	176	0	6,140
Ohio	Richard Gorsuch	2	5,786	146	0	0	5,020	5,786	146	0	5,054
Ohio	Richard Gorsuch	3	7,862	198	0	0	6,822	7,862	196	0	6,866
Ohio	Richard Gorsuch	4	1,602	40	0	0	1,392	1,602	40	0	1,400
Ohio	Tidd	**1	816	21	0	0	708	818	21	0	712
Ohio	Toronto	9	2,140	54	0	0	1,859	1,027	26	0	897
Ohio	Toronto	10	3,820	97	0	0	3,314	1,834	47	0	1,602
Ohio	Toronto	11	4,126	105	0	0	3,581	1,982	49	0	1,732
Ohio	W H Sammis	1	7,130	180	0	0	6,187	7,130	180	0	6,226
Ohio	W H Sammis	2	6,253	158	0	0	5,426	6,253	158	0	5,462
Ohio	W H Sammis	3	7,129	180	0	0	6,186	7,129	180	0	6,227
Ohio	W H Sammis	4	6,317	160	0	0	5,481	6,317	159	0	5,516
Ohio	W H Sammis	5	11,600	294	270	0	10,335	11,600	293	270	10,402
Ohio	W H Sammis	6	22,210	562	517	0	19,790	22,210	561	517	19,916
Ohio	W H Sammis	7	20,747	525	483	0	18,486	20,747	524	483	18,605
Ohio	W H Zimmer	1	18,458	467	0	0	16,017	18,458	466	0	16,122
Ohio	Walter C Beckjord	1	539	14	0	1,363	1,830	539	14	0	470
Ohio	Walter C Beckjord	2	812	21	0	1,148	1,853	812	21	0	709
Ohio	Walter C Beckjord	3	1,226	31	0	1,455	2,521	1,226	31	0	1,073
Ohio	Walter C Beckjord	4	2,442	62	0	1,125	3,245	2,442	62	0	2,133
Ohio	Walter C Beckjord	5	4,294	109	100	0	3,825	4,294	108	100	3,851
Ohio	Walter C Beckjord	6	11,046	280	257	0	9,843	11,046	279	257	9,907
Ohio	Woodsdale	**GT1	337	9	0	0	292	337	9	0	294
Ohio	Woodsdale	**GT2	337	9	0	0	292	337	9	0	294
Ohio	Woodsdale	**GT3	337	9	0	0	292	337	9	0	294

TABLE 2. -- PHASE II ALLOWANCE ALLOCATIONS

State	Plant Name	Boiler [1]	Allowances for years 2000-2009					Allowances for years 2010 and thereafter			
			(A) [2] Unadjusted basic	(B) Special allowance reserve deduction	(C) Additional basic (§405(a)(3))	(D) Total Bonus	(E) [3] Total annual phase II	(F) [2] Unadjusted basic	(G) Special allowance reserve deduction	(H) Additional basic (§ 405(a)(3))	(I) [4] Total annual phase II
Ohio	Woodsdale	**GT4	337	9	0	0	292	337	9	0	294
Ohio	Woodsdale	**GT5	337	9	0	0	292	337	9	0	294
Ohio	Woodsdale	**GT8	0	0	0	0	0	0	0	0	0
Ohio	Woodsdale	**GT9	0	0	0	0	0	0	0	0	0
Ohio	Woodsdale	**GT10	0	0	0	0	0	0	0	0	0
Ohio	Woodsdale	**GT11	0	0	0	0	0	0	0	0	0
Ohio	Woodsdale	**GT12	0	0	0	0	0	0	0	0	0
Oklahoma	Anadarko	3	0	0	0	0	0	1	0	0	1
Oklahoma	Arbuckle	ARB	1	0	0	44	45	56	1	0	49
Oklahoma	Comanche	7251	2	0	0	330	332	164	4	0	143
Oklahoma	Comanche	7252	2	0	0	0	2	164	4	0	143
Oklahoma	Conoco	**1	253	6	0	0	220	253	6	0	221
Oklahoma	Conoco	**2	253	6	0	0	220	253	6	0	221
Oklahoma	Grda	1	15,639	403	0	694	14,525	15,939	402	0	13,923
Oklahoma	Grda	2	9,550	242	0	38	8,325	9,550	241	0	8,342
Oklahoma	Horseshoe Lake	6	4	0	0	169	173	183	5	0	159
Oklahoma	Horseshoe Lake	7	5	0	0	226	231	236	6	0	206
Oklahoma	Horseshoe Lake	8	8	0	0	306	313	406	10	0	357
Oklahoma	Hugo	1	13,090	331	0	421	11,780	13,090	330	0	11,434
Oklahoma	Inola	**1	0	0	0	0	0	0	0	0	0
Oklahoma	Mooreland	1	0	0	0	0	0	1	0	0	1
Oklahoma	Mooreland	2	1	0	0	43	44	65	2	0	56
Oklahoma	Mooreland	3	0	0	0	6	6	19	0	0	17
Oklahoma	Muskogee	3	3	0	0	138	141	156	4	0	136
Oklahoma	Muskogee	4	10,130	256	0	446	9,236	10,130	256	0	8,848
Oklahoma	Muskogee	5	8,937	226	0	456	8,211	8,937	226	0	7,806
Oklahoma	Muskogee	6	15,692	402	0	516	14,307	15,692	401	0	13,681
Oklahoma	Mustang	1	1	0	0	31	32	30	1	0	26
Oklahoma	Mustang	2	1	0	0	25	26	29	1	0	25
Oklahoma	Mustang	3	1	0	0	0	1	92	2	0	81
Oklahoma	Mustang	4	5	0	0	158	163	216	6	0	190
Oklahoma	Na 1 -- 5030	**1	0	0	0	0	0	0	0	0	0
Oklahoma	Na 1 -- 5030	**2	0	0	0	0	0	0	0	0	0
Oklahoma	Na 1 -- 5030	**3	0	0	0	0	0	0	0	0	0
Oklahoma	Northeastern	3301	1,878	48	0	99	1,727	1,876	47	0	1,841
Oklahoma	Northeastern	3302	6,363	161	0	366	5,868	6,363	161	0	5,558
Oklahoma	Northeastern	3313	15,113	383	0	608	13,721	15,113	382	0	13,200
Oklahoma	Northeastern	3314	16,354	414	0	572	14,762	16,354	413	0	14,285
Oklahoma	Ponca	2	0	0	0	0	0	0	0	0	0
Oklahoma	Riverside	1501	6	0	0	514	519	476	12	0	416
Oklahoma	Riverside	1502	5	0	0	280	285	382	10	0	333
Oklahoma	Seminole	1	14	0	0	399	412	437	11	0	382
Oklahoma	Seminole	2	6	0	0	447	452	492	12	0	430
Oklahoma	Seminole	3	44	1	0	455	494	577	15	0	504
Oklahoma	Sooner	1	11,336	287	0	550	10,387	11,336	286	0	9,902
Oklahoma	Sooner	2	10,781	273	0	545	9,899	10,781	272	0	9,417
Oklahoma	Southwestern	8002	0	0	0	15	15	20	1	0	17

TABLE 2. -- PHASE II ALLOWANCE ALLOCATIONS

State	Plant Name	Boiler [1]	Allowances for years 2000-2009					Allowances for years 2010 and thereafter			
			(A) [2] Unadjusted basic	(B) Special allowance reserve deduction	(C) Additional basic (§405(a)(3))	(D) Total Bonus	(E) [3] Total annual phase II	(F) [2] Unadjusted basic	(G) Special allowance reserve deduction	(H) Additional basic (§ 405(a)(3))	(I) [4] Total annual phase II
Oklahoma	Southwestern	6003	3	0	0	161	164	188	5	0	164
Oklahoma	Southwestern	601N	0	0	0	3	3	5	0	0	4
Oklahoma	Southwestern	601S	0	0	0	0	0	3	0	0	3
Oklahoma	Tulsa	1402	0	0	0	98	98	51	1	0	45
Oklahoma	Tulsa	1403	0	0	0	4	4	3	0	0	3
Oklahoma	Tulsa	1404	1	0	0	57	58	73	2	0	64
Oregon	Boardman	1SG	15,286	387	0	0	13,265	15,286	386	0	13,352
Pennsylvania	Armstrong	1	6,918	175	161	0	6,164	6,918	175	161	6,203
Pennsylvania	Armstrong	2	7,407	188	172	0	6,596	7,407	187	172	6,642
Pennsylvania	Bruce Mansfield	1	14,532	368	0	0	12,609	14,532	367	0	12,693
Pennsylvania	Bruce Mansfield	2	16,077	407	0	0	13,950	16,077	406	0	14,043
Pennsylvania	Bruce Mansfield	3	16,538	419	0	0	14,350	16,538	418	0	14,445
Pennsylvania	Brunner Island	1	13,326	337	310	0	11,874	13,326	336	310	11,950
Pennsylvania	Brunner Island	2	14,930	378	348	0	13,303	14,930	377	348	13,389
Pennsylvania	Brunner Island	3	25,836	654	601	0	23,018	25,836	652	601	23,168
Pennsylvania	Cheswick	1	18,800	476	438	0	16,751	18,800	475	438	16,859
Pennsylvania	Conemaugh	1	28,874	732	672	0	25,723	28,874	730	672	25,891
Pennsylvania	Conemaugh	2	32,005	811	745	0	28,513	32,005	809	745	28,700
Pennsylvania	Cromby	1	2,518	64	0	0	2,164	2,518	64	0	2,199
Pennsylvania	Cromby	2	2,411	61	0	0	2,093	2,411	61	0	2,106
Pennsylvania	Delaware	71	850	22	0	0	737	850	21	0	743
Pennsylvania	Delaware	81	614	16	0	0	532	614	16	0	536
Pennsylvania	Eddystone	1	2,920	74	0	290	2,823	2,920	74	0	2,550
Pennsylvania	Eddystone	2	2,856	72	0	506	2,985	2,856	72	0	2,495
Pennsylvania	Eddystone	3	2,166	55	0	0	1,879	2,166	55	0	1,892
Pennsylvania	Eddystone	4	2,298	58	0	0	1,994	2,298	58	0	2,007
Pennsylvania	Elrama	1	812	21	0	939	1,644	812	21	0	709
Pennsylvania	Elrama	2	755	19	0	955	1,610	755	19	0	660
Pennsylvania	Elrama	3	1,743	44	0	42	1,556	1,743	44	0	1,522
Pennsylvania	Elrama	4	2,948	75	0	0	2,558	2,948	74	0	2,575
Pennsylvania	F R Phillips	1	164	3	0	516	662	164	3	0	144
Pennsylvania	F R Phillips	2	125	3	0	394	504	125	3	0	109
Pennsylvania	F R Phillips	3	290	8	0	911	1,162	290	8	0	252
Pennsylvania	F R Phillips	4	276	7	0	870	1,111	276	7	0	242
Pennsylvania	F R Phillips	5	281	7	0	864	1,130	281	7	0	245
Pennsylvania	F R Phillips	6	1,265	32	0	915	2,013	1,265	32	0	1,105
Pennsylvania	Front Street	7	337	9	0	0	292	337	9	0	294
Pennsylvania	Front Street	8	337	9	0	0	292	337	9	0	294
Pennsylvania	Front Street	9	1,344	36	0	0	1,164	1,344	32	0	1,176
Pennsylvania	Front Street	10	1,344	36	0	0	1,164	1,344	32	0	1,176
Pennsylvania	Hatfield'S Ferry	1	18,157	480	423	0	16,178	18,157	456	423	16,283
Pennsylvania	Hatfield'S Ferry	2	17,915	453	417	0	15,963	17,915	452	417	16,065
Pennsylvania	Hatfield'S Ferry	3	19,329	489	450	0	17,222	19,329	486	450	17,333
Pennsylvania	Holtwood	17	4,081	103	0	0	3,542	4,081	103	0	3,565
Pennsylvania	Homer City	1	20,293	514	0	0	17,608	20,293	512	0	17,726
Pennsylvania	Homer City	2	17,613	446	0	901	16,164	17,613	445	0	15,384
Pennsylvania	Homer City	3	31,573	800	0	0	27,392	31,573	798	0	27,578

TABLE 2. -- PHASE II ALLOWANCE ALLOCATIONS

State	Plant Name	Boiler [1]	Allowances for years 2000–2009					Allowances for years 2010 and thereafter			
			(A) [2] Unadjusted basic	(B) Special allowance reserve deduction	(C) Additional basic (§405(a)(3))	(D) Total Bonus	(E) [3] Total annual phase II	(F) [2] Unadjusted basic	(G) Special allowance reserve deduction	(H) Additional basic (§ 405(a)(3))	(I) [4] Total annual phase II
Pennsylvania	Hunlock Power	6	2,579	65	0	0	2,238	2,579	65	0	2,253
Pennsylvania	Keystone	1	32,247	817	0	0	27,976	32,247	815	0	28,187
Pennsylvania	Keystone	2	34,335	870	0	0	29,789	34,335	868	0	29,990
Pennsylvania	Marcus Hook Refinery	1	0	0	0	0	0	0	0	0	0
Pennsylvania	Martins Creek	1	6,075	154	141	0	5,412	6,075	153	141	5,448
Pennsylvania	Martins Creek	2	6,154	156	143	0	5,483	6,154	155	143	5,519
Pennsylvania	Martins Creek	3	15,084	381	0	0	13,072	15,084	380	0	13,158
Pennsylvania	Martins Creek	4	13,857	351	0	0	12,024	13,857	350	0	12,103
Pennsylvania	Mitchell	1	0	0	0	0	0	0	0	0	0
Pennsylvania	Mitchell	2	1	0	0	0	1	1	0	0	1
Pennsylvania	Mitchell	3	0	0	0	0	0	0	0	0	0
Pennsylvania	Mitchell	33	3,540	90	0	431	3,502	3,540	89	0	3,092
Pennsylvania	Montour	1	27,398	693	0	215	23,867	27,398	692	0	23,931
Pennsylvania	Montour	2	28,204	714	0	0	24,470	28,204	712	0	24,535
Pennsylvania	New Castle	1	1,476	37	0	0	1,282	709	18	0	618
Pennsylvania	New Castle	2	1,643	41	0	0	1,426	789	20	0	689
Pennsylvania	New Castle	3	3,248	82	0	0	2,819	3,248	82	0	2,837
Pennsylvania	New Castle	4	2,973	75	0	215	2,795	2,973	75	0	2,597
Pennsylvania	New Castle	5	5,159	131	0	0	4,478	5,159	130	0	4,508
Pennsylvania	Portland	1	2,850	72	66	0	2,539	2,850	72	66	2,556
Pennsylvania	Portland	2	4,913	124	114	0	4,377	4,913	124	114	4,405
Pennsylvania	Richmond	63	0	0	0	0	0	0	0	0	0
Pennsylvania	Richmond	64	0	0	0	0	0	0	0	0	0
Pennsylvania	Schuylkill	1	654	17	0	0	567	654	17	0	571
Pennsylvania	Seward	12	1,253	32	0	0	1,087	1,253	32	0	1,094
Pennsylvania	Seward	14	1,253	32	0	0	1,087	1,253	32	0	1,094
Pennsylvania	Seward	15	5,715	145	0	0	4,959	5,715	144	0	4,992
Pennsylvania	Shawville	1	4,930	125	115	0	4,393	4,930	124	115	4,422
Pennsylvania	Shawville	2	4,960	126	115	0	4,418	4,960	125	115	4,448
Pennsylvania	Shawville	3	6,803	172	158	0	6,061	6,803	172	158	6,100
Pennsylvania	Shawville	4	6,757	171	157	0	6,020	6,757	171	157	6,059
Pennsylvania	Southwark	11	0	0	0	0	0	0	0	0	0
Pennsylvania	Southwark	12	0	0	0	0	0	0	0	0	0
Pennsylvania	Southwark	21	0	0	0	0	0	0	0	0	0
Pennsylvania	Southwark	22	0	0	0	0	0	0	0	0	0
Pennsylvania	Springdale	77	0	0	0	0	0	0	0	0	0
Pennsylvania	Springdale	88	0	0	0	0	0	0	0	0	0
Pennsylvania	Sunbury	3	4,554	115	43	0	3,995	4,554	115	43	4,020
Pennsylvania	Sunbury	4	5,844	148	136	0	5,208	5,844	148	136	5,240
Pennsylvania	Sunbury	1A	2,077	52	0	0	1,802	2,077	52	0	1,815
Pennsylvania	Sunbury	1B	2,076	52	0	0	1,801	2,076	52	0	1,814
Pennsylvania	Sunbury	2A	2,077	52	0	0	1,802	2,077	52	0	1,815
Pennsylvania	Sunbury	2B	2,077	52	0	0	1,802	2,077	52	0	1,815
Pennsylvania	Titus	1	2,169	55	0	252	2,134	2,169	55	0	1,894
Pennsylvania	Titus	2	2,466	63	0	97	2,253	2,466	63	0	2,171
Pennsylvania	Titus	3	2,275	58	0	204	2,177	2,275	57	0	1,968
Pennsylvania	Warren	1	823	21	0	0	714	823	21	0	719

TABLE 2. -- PHASE II ALLOWANCE ALLOCATIONS

State	Plant Name	Boiler [1]	Allowances for years 2000–2009					Allowances for years 2010 and thereafter			
			(A) [2] Unadjusted basic	(B) Special allowance reserve deduction	(C) Additional basic (§405(a)(3))	(D) Total Bonus	(E) [3] Total annual phase II	(F) [2] Unadjusted basic	(G) Special allowance reserve deduction	(H) Additional basic (§ 405(a)(3))	(I) [4] Total annual phase II
Pennsylvania	Warren	2	823	21	0	0	714	823	21	0	719
Pennsylvania	Warren	3	845	21	0	0	733	845	21	0	738
Pennsylvania	Warren	4	845	21	0	0	733	845	21	0	738
Pennsylvania	Williamsburg	11	1,068	27	0	0	927	1,068	27	0	933
Rhode Island	Manchester Street	6	749	19	0	37	687	749	19	0	654
Rhode Island	Manchester Street	7	497	13	0	24	454	497	13	0	434
Rhode Island	Manchester Street	12	553	14	0	28	507	553	14	0	483
Rhode Island	South Street	121	1,195	30	0	41	1,080	1,195	30	0	1,044
Rhode Island	South Street	122	1,083	28	0	0	939	1,083	28	0	946
South Carolina	Canadys Steam	CAN1	3,350	85	0	316	3,223	3,350	85	0	2,926
South Carolina	Canadys Steam	CAN2	2,634	67	0	674	2,960	2,634	66	0	2,301
South Carolina	Canadys Steam	CAN3	3,542	90	0	1,124	4,197	3,542	89	0	3,094
South Carolina	Cross	1	6,401	162	0	0	5,555	6,401	162	0	5,591
South Carolina	Cross	2	10,216	259	0	0	8,864	10,216	258	0	8,923
South Carolina	Dolphus M Grainger	1	3,558	90	0	0	3,087	3,558	90	0	3,106
South Carolina	Dolphus M Grainger	2	316	8	0	0	274	316	8	0	276
South Carolina	H B Robinson	1	3,317	84	0	912	3,790	3,317	84	0	2,897
South Carolina	Hagood	**4	1,084	27	0	0	942	1,084	27	0	947
South Carolina	Hagood	HAG1	3	0	0	0	3	3	0	0	3
South Carolina	Hagood	HAG2	2	0	0	449	451	2	0	0	2
South Carolina	Hagood	HAG3	7	0	0	781	787	7	0	0	6
South Carolina	Jefferies	1	0	0	0	0	0	0	0	0	0
South Carolina	Jefferies	2	1	0	0	0	1	1	0	0	1
South Carolina	Jefferies	3	3,854	98	0	514	3,857	3,854	97	0	3,367
South Carolina	Jefferies	4	3,599	91	0	593	3,716	3,599	91	0	3,143
South Carolina	Mcmeekin	MCM1	4,662	118	0	0	4,045	4,662	116	0	4,072
South Carolina	Mcmeekin	MCM2	4,614	117	0	0	4,004	4,614	116	0	4,031
South Carolina	Ns 4 -- 7210	**ST1	0	0	0	0	0	0	0	0	0
South Carolina	Urquhart	URQ1	2,509	64	0	0	2,176	2,509	63	0	2,192
South Carolina	Urquhart	URQ2	1,922	49	0	245	1,912	1,922	49	0	1,678
South Carolina	Urquhart	URQ3	3,329	84	0	0	2,889	3,329	84	0	2,906
South Carolina	W S Lee	1	1,027	26	0	1,234	2,125	1,027	26	0	897
South Carolina	W S Lee	2	1,292	33	0	1,147	2,267	1,292	33	0	1,128
South Carolina	W S Lee	3	2,022	51	0	1,674	3,429	2,022	51	0	1,786
South Carolina	Wateree	WAT1	11,104	281	0	0	9,835	11,104	280	0	9,699
South Carolina	Wateree	WAT2	10,292	261	0	263	9,193	10,292	260	0	8,990
South Carolina	Williams	WIL1	18,079	458	0	0	15,887	18,079	456	0	15,792
South Carolina	Winyah	1	8,655	219	0	0	7,510	8,655	218	0	7,560
South Carolina	Winyah	2	5,849	148	0	1,115	6,190	5,849	148	0	5,109
South Carolina	Winyah	3	2,862	72	0	1,106	3,590	2,862	72	0	2,500
South Carolina	Winyah	4	3,916	99	0	0	3,396	3,916	99	0	3,420
South Dakota	Big Stone	1	14,799	375	0	764	13,605	14,799	374	0	12,926
South Dakota	Huron	**2A	91	2	0	0	80	91	2	0	80
South Dakota	Huron	**2B	117	3	0	0	101	117	3	0	102
South Dakota	Mobile	**2	20	1	0	0	17	20	1	0	17
South Dakota	Pathfinder	11	12	0	0	0	11	12	0	0	11
South Dakota	Pathfinder	12	2	0	0	0	2	2	0	0	2

TABLE 2. -- PHASE II ALLOWANCE ALLOCATIONS

State	Plant Name	Boiler [1]	Allowances for years 2000–2009					Allowances for years 2010 and thereafter			
			(A) [2] Unadjusted basic	(B) Special allowance reserve deduction	(C) Additional basic (§405(a)(3))	(D) Total Bonus	(E) [3] Total annual phase II	(F) [2] Unadjusted basic	(G) Special allowance reserve deduction	(H) Additional basic (§ 405(a)(3))	(I) [4] Total annual phase II
South Dakota	Pathfinder	13	2	0	0	0	2	2	0	0	2
Tennessee	Allen	1	7,355	186	171	0	6,554	7,355	186	171	6,595
Tennessee	Allen	2	8,049	204	187	0	7,171	8,049	203	187	7,218
Tennessee	Allen	3	7,520	190	175	0	6,701	7,520	190	175	6,743
Tennessee	Bull Run	1	28,623	725	0	0	24,834	28,623	724	0	25,000
Tennessee	Cumberland	1	41,616	1,054	970	0	37,077	41,616	1,052	970	37,320
Tennessee	Cumberland	2	45,523	1,153	1,061	0	40,559	45,523	1,150	1,061	40,824
Tennessee	Gallatin	1	8,465	214	197	0	7,542	8,465	214	197	7,591
Tennessee	Gallatin	2	8,306	210	193	0	7,403	8,306	210	193	7,450
Tennessee	Gallatin	3	9,611	243	224	0	8,564	9,611	243	224	8,619
Tennessee	Gallatin	4	10,204	258	238	0	9,092	10,204	258	238	9,150
Tennessee	John Sevier	1	7,268	184	0	0	6,306	7,268	183	0	6,349
Tennessee	John Sevier	2	7,265	184	0	0	6,304	7,265	183	0	6,346
Tennessee	John Sevier	3	7,450	189	0	0	6,463	7,450	188	0	6,507
Tennessee	John Sevier	4	7,620	193	0	0	6,612	7,620	192	0	6,656
Tennessee	Johnsonville	1	3,738	95	87	0	3,330	3,738	94	87	3,352
Tennessee	Johnsonville	2	3,857	98	90	0	3,436	3,857	97	90	3,459
Tennessee	Johnsonville	3	4,037	102	94	0	3,598	4,037	102	94	3,620
Tennessee	Johnsonville	4	3,833	97	89	0	3,415	3,833	97	89	3,437
Tennessee	Johnsonville	5	3,954	100	92	0	3,523	3,954	100	92	3,546
Tennessee	Johnsonville	6	3,769	96	88	0	3,375	3,769	96	88	3,397
Tennessee	Johnsonville	7	4,309	109	100	0	3,839	4,309	109	100	3,864
Tennessee	Johnsonville	8	4,178	106	97	0	3,722	4,178	105	97	3,747
Tennessee	Johnsonville	9	3,397	86	79	0	3,027	3,397	86	79	3,046
Tennessee	Johnsonville	10	3,625	92	84	0	3,230	3,625	92	84	3,250
Tennessee	Kingston	1	4,743	120	0	0	4,116	4,743	120	0	4,143
Tennessee	Kingston	2	4,524	115	0	33	3,958	4,524	114	0	3,952
Tennessee	Kingston	3	5,430	137	0	0	4,713	5,430	137	0	4,743
Tennessee	Kingston	4	5,761	146	0	0	4,999	5,761	145	0	5,032
Tennessee	Kingston	5	7,079	179	0	0	6,142	7,079	179	0	6,163
Tennessee	Kingston	6	7,253	184	0	0	6,293	7,253	183	0	6,335
Tennessee	Kingston	7	7,072	179	0	0	6,137	7,072	179	0	6,177
Tennessee	Kingston	8	6,609	167	0	0	5,736	6,609	167	0	5,773
Tennessee	Kingston	9	7,319	185	0	0	6,351	7,319	185	0	6,393
Tennessee	Watts Bar	A	0	0	0	0	0	0	0	0	0
Tennessee	Watts Bar	B	0	0	0	0	0	0	0	0	0
Tennessee	Watts Bar	C	0	0	0	0	0	0	0	0	0
Tennessee	Watts Bar	D	0	0	0	0	0	0	0	0	0
Texas	Barney M Davis	1	29	1	0	470	495	470	12	0	410
Texas	Barney M Davis	2	26	1	0	376	398	438	11	0	383
Texas	Big Brown	1	22,998	582	0	858	20,813	22,998	581	0	20,068
Texas	Big Brown	2	21,999	557	0	625	19,714	21,999	555	0	19,216
Texas	Bryan	6	14	0	0	6	19	26	1	0	22
Texas	C E Newman	BW5	0	0	0	3	3	4	0	0	4
Texas	Cedar Bayou	CBY1	16	0	0	799	813	801	20	0	700
Texas	Cedar Bayou	CBY2	6	0	0	916	921	978	25	0	854
Texas	Cedar Bayou	CBY3	17	0	0	710	725	806	20	0	704

TABLE 2. -- PHASE II ALLOWANCE ALLOCATIONS

State	Plant Name	Boiler [1]	Allowances for years 2000–2009					Allowances for years 2010 and thereafter			
			(A) [2] Unadjusted basic	(B) Special allowance reserve deduction	(C) Additional basic (§405(a)(3))	(D) Total Bonus	(E) [3] Total annual phase II	(F) [2] Unadjusted basic	(G) Special allowance reserve deduction	(H) Additional basic (§ 405(a)(3))	(I) [4] Total annual phase II
Texas	Coleto Creek	1	15,750	399	0	938	14,804	15,750	398	0	13,757
Texas	Coleto Creek	**2	0	0	0	0	0	0	0	0	0
Texas	Collin	1	54	1	0	44	92	107	3	0	93
Texas	Concho	2	0	0	0	4	4	0	0	0	0
Texas	Concho	4	0	0	0	0	0	0	0	0	0
Texas	Concho	5	0	0	0	0	0	0	0	0	0
Texas	Concho	6	0	0	0	0	0	0	0	0	0
Texas	Concho	7	8	0	0	0	7	14	0	0	13
Texas	Dallas	3	7	0	0	21	27	27	1	0	23
Texas	Dallas	9	8	0	0	19	26	29	1	0	25
Texas	Dansby	1	34	1	0	64	94	121	3	0	106
Texas	Decker Creek	1	2	0	0	126	126	171	4	0	150
Texas	Decker Creek	2	2	0	0	193	195	206	5	0	180
Texas	Decordova	1	29	1	0	992	1,017	1,004	25	0	877
Texas	Deepwater	DWP1	0	0	0	0	0	0	0	0	0
Texas	Deepwater	DWP2	0	0	0	0	0	0	0	0	0
Texas	Deepwater	DWP3	0	0	0	0	0	0	0	0	0
Texas	Deepwater	DWP4	0	0	0	0	0	0	0	0	0
Texas	Deepwater	DWP5	0	0	0	0	0	0	0	0	0
Texas	Deepwater	DWP6	0	0	0	0	0	0	0	0	0
Texas	Deepwater	DWP9	1	0	0	27	28	42	1	0	37
Texas	E S Joslin	1	2	0	0	257	259	239	6	0	209
Texas	Eagle Mountain	1	7	0	0	46	52	49	1	0	43
Texas	Eagle Mountain	2	24	1	0	119	140	132	3	0	116
Texas	Eagle Mountain	3	2	0	0	97	99	124	3	0	106
Texas	Forest Grove	**1	0	0	0	0	0	0	0	0	0
Texas	Fort Phantom	1	8	0	0	119	126	147	4	0	126
Texas	Fort Phantom	2	37	1	0	155	187	220	6	0	192
Texas	Generic Stat	**1	0	0	0	0	0	0	0	0	0
Texas	Generic Stat	**2	0	0	0	0	0	0	0	0	0
Texas	Gibbons Creek	1	15,861	401	0	534	14,298	15,861	400	0	13,854
Texas	Graham	1	4	0	0	231	235	222	6	0	194
Texas	Graham	2	44	1	0	457	496	463	12	0	404
Texas	Greens Bayou	GBY1	0	0	0	1	1	3	0	0	3
Texas	Greens Bayou	GBY2	0	0	0	2	2	3	0	0	3
Texas	Greens Bayou	GBY3	0	0	0	15	15	7	0	0	6
Texas	Greens Bayou	GBY4	0	0	0	19	19	9	0	0	8
Texas	Greens Bayou	GBY5	31	1	0	324	351	352	9	0	307
Texas	Gt 98	**1	0	0	0	0	0	0	0	0	0
Texas	Gt 98	**2	0	0	0	0	0	0	0	0	0
Texas	Gt 99	**1	0	0	0	0	0	0	0	0	0
Texas	Gt 99	**2	0	0	0	0	0	0	0	0	0
Texas	Gt 99	**3	0	0	0	0	0	0	0	0	0
Texas	Handley	2	0	0	0	21	21	17	0	0	15
Texas	Handley	3	21	1	0	404	422	448	11	0	392
Texas	Handley	4	16	0	0	104	118	128	3	0	112
Texas	Handley	5	22	1	0	117	138	145	4	0	126

TABLE 2. -- PHASE II ALLOWANCE ALLOCATIONS

State	Plant Name	Boiler [1]	Allowances for years 2000–2009					Allowances for years 2010 and thereafter			
			(A) [2] Unadjusted basic	(B) Special allowance reserve deduction	(C) Additional basic (§405(a)(3))	(D) Total Bonus	(E) [3] Total annual phase II	(F) [2] Unadjusted basic	(G) Special allowance reserve deduction	(H) Additional basic (§ 405(a)(3))	(I) [4] Total annual phase II
Texas	Handley	1A	0	0	0	7	7	3	0	0	3
Texas	Handley	1B	0	0	0	0	0	3	0	0	3
Texas	Harrington Station	061B	8,798	223	0	536	8,167	8,798	222	0	7,683
Texas	Harrington Station	062B	9,350	237	0	537	8,651	9,350	236	0	8,167
Texas	Harrington Station	063B	9,871	252	0	542	9,195	9,971	252	0	8,709
Texas	Hiram Clarke	HOC1	0	0	0	0	0	0	0	0	0
Texas	Hiram Clarke	HOC2	0	0	0	0	0	0	0	0	0
Texas	Hiram Clarke	HOC3	0	0	0	3	3	2	0	0	2
Texas	Hiram Clarke	HOC4	0	0	0	2	2	1	0	0	1
Texas	Holly Ave	1	1	0	0	58	59	81	2	0	71
Texas	Holly Ave	2	1	0	0	70	71	87	2	0	76
Texas	Holly Street	1	0	0	0	49	49	19	0	0	17
Texas	Holly Street	2	0	0	0	31	31	21	1	0	18
Texas	Holly Street	3	1	0	0	67	68	75	2	0	65
Texas	Holly Street	4	2	0	0	41	43	93	2	0	82
Texas	J K Spruce	**1	7,847	194	0	0	8,635	7,847	193	0	6,679
Texas	J K Spruce	**2	0	0	0	0	0	0	0	0	0
Texas	J L Bates	1	1	0	0	47	48	52	1	0	46
Texas	J L Bates	2	2	0	0	122	124	115	3	0	100
Texas	J T Deely	1	14,339	383	0	588	13,029	14,339	382	0	12,525
Texas	J T Deely	2	14,958	379	0	615	13,594	14,958	378	0	13,065
Texas	Jones Station	151B	2	0	0	123	125	84	2	0	73
Texas	Jones Station	152B	4	0	0	89	93	77	2	0	67
Texas	Knox Lee	2	0	0	0	0	0	0	0	0	0
Texas	Knox Lee	3	0	0	0	5	5	2	0	0	2
Texas	Knox Lee	4	0	0	0	29	29	14	0	0	13
Texas	Knox Lee	5	2	0	0	249	251	170	4	0	149
Texas	La Palma	7	2	0	0	176	178	174	4	0	152
Texas	Lake Creek	1	1	0	0	38	39	33	1	0	29
Texas	Lake Creek	2	4	0	0	187	191	161	4	0	141
Texas	Lake Hubbard	1	25	1	0	148	170	229	6	0	200
Texas	Lake Hubbard	2	93	2	0	521	603	660	17	0	576
Texas	Laredo	1	0	0	0	15	15	18	0	0	16
Texas	Laredo	2	0	0	0	14	14	16	0	0	14
Texas	Laredo	3	6	0	0	60	65	132	3	0	116
Texas	Leon Creek	3	0	0	0	2	2	2	0	0	2
Texas	Leon Creek	4	0	0	0	10	10	9	0	0	8
Texas	Lewis Creek	1	4	0	0	313	317	301	8	0	263
Texas	Lewis Creek	2	4	0	0	267	271	293	7	0	256
Texas	Limestone	LIM1	27,065	685	0	102	23,565	27,065	683	0	23,641
Texas	Limestone	LIM2	16,178	409	0	0	14,038	16,178	406	0	14,131
Texas	Lon C Hill	1	0	0	0	9	9	8	0	0	7
Texas	Lon C Hill	2	0	0	0	10	10	8	0	0	7
Texas	Lon C Hill	3	2	0	0	177	179	104	3	0	90
Texas	Lon C Hill	4	4	0	0	193	197	272	7	0	237
Texas	Lone Star	1	0	0	0	0	0	11	0	0	10
Texas	Malakoff	**1	1,759	45	0	0	1,526	1,759	44	0	1,537

TABLE 2. -- PHASE II ALLOWANCE ALLOCATIONS

State	Plant Name	Boiler [1]	Allowances for years 2000–2009					Allowances for years 2010 and thereafter			
			(A) [2] Unadjusted basic	(B) Special allowance reserve deduction	(C) Additional basic (§405(a)(3))	(D) Total Bonus	(E) [3] Total annual phase II	(F) [2] Unadjusted basic	(G) Special allowance reserve deduction	(H) Additional basic (§ 405(a)(3))	(I) [4] Total annual phase II
Texas	Malakoff	**2	0	0	0	0	0	0	0	0	0
Texas	Martin Lake	1	36,736	931	0	1,084	32,656	36,736	928	0	32,088
Texas	Martin Lake	2	35,617	903	0	1,096	32,000	35,617	900	0	31,110
Texas	Martin Lake	3	36,994	937	0	1,084	33,161	36,994	935	0	32,313
Texas	Mission Road	3	0	0	0	3	3	9	0	0	8
Texas	Monticello	1	25,964	657	0	919	23,447	25,964	655	0	22,679
Texas	Monticello	2	25,188	637	0	915	22,751	25,188	635	0	21,982
Texas	Monticello	3	38,636	984	0	1,249	34,943	38,636	981	0	33,922
Texas	Morgan Creek	3	0	0	0	8	8	7	0	0	6
Texas	Morgan Creek	4	13	0	0	60	72	64	2	0	56
Texas	Morgan Creek	5	17	0	0	139	154	167	5	0	163
Texas	Morgan Creek	6	218	8	0	648	834	888	22	0	774
Texas	Mountain Creek	2	1	0	0	3	4	3	0	0	3
Texas	Mountain Creek	6	22	1	0	44	63	84	2	0	73
Texas	Mountain Creek	7	4	0	0	58	62	67	2	0	58
Texas	Mountain Creek	8	59	1	0	475	527	610	15	0	533
Texas	Mountain Creek	3A	2	0	0	9	11	5	0	0	4
Texas	Mountain Creek	3B	2	0	0	0	2	5	0	0	4
Texas	Na 1 -- 7216	**1	0	0	0	0	0	0	0	0	0
Texas	Na 1 -- 7216	**2	0	0	0	0	0	0	0	0	0
Texas	Na 1 -- 7219	**1	0	0	0	0	0	0	0	0	0
Texas	Na 1 -- 7219	**2	0	0	0	0	0	0	0	0	0
Texas	Na 2 -- 4274	**NA1	0	0	0	0	0	0	0	0	0
Texas	Neches	11	0	0	0	0	0	0	0	0	0
Texas	Neches	13	0	0	0	0	0	0	0	0	0
Texas	Neches	15	0	0	0	0	0	0	0	0	0
Texas	Neches	18	0	0	0	0	0	0	0	0	0
Texas	Newman	1	0	0	0	14	14	21	1	0	18
Texas	Newman	2	1	0	0	28	29	47	1	0	41
Texas	Newman	3	1	0	0	87	88	107	3	0	93
Texas	Newman	**4	2	0	0	97	99	157	4	0	137
Texas	Nichols Station	141B	1	0	0	76	77	93	2	0	82
Texas	Nichols Station	142B	1	0	0	85	86	87	2	0	76
Texas	Nichols Station	143B	0	0	0	50	50	38	1	0	31
Texas	North Lake	1	45	1	0	91	131	148	4	0	129
Texas	North Lake	2	43	1	0	112	150	161	4	0	141
Texas	North Lake	3	64	2	0	236	294	291	7	0	255
Texas	North Main	4	9	0	0	34	42	40	1	0	35
Texas	North Texas	3	0	0	0	13	13	9	0	0	8
Texas	Nueces Bay	5	0	0	0	1	1	1	0	0	1
Texas	Nueces Bay	6	2	0	0	138	140	130	3	0	114
Texas	Nueces Bay	7	7	0	0	489	495	491	12	0	429
Texas	O W Sommers	1	83	2	0	405	478	544	14	0	475
Texas	O W Sommers	2	4	0	0	184	188	367	9	0	321
Texas	Oak Creek	1	16	0	0	92	108	122	3	0	107
Texas	Oklaunion	1	8,980	227	0	0	7,793	9,980	227	0	7,843
Texas	P H Robinson	PHR1	6	0	0	639	644	497	13	0	434

TABLE 2. -- PHASE II ALLOWANCE ALLOCATIONS

State	Plant Name	Boiler [1]	Allowances for years 2000–2009					Allowances for years 2010 and thereafter			
			(A) [2] Unadjusted basic	(B) Special allowance reserve deduction	(C) Additional basic (§405(a)(3))	(D) Total Bonus	(E) [3] Total annual phase II	(F) [2] Unadjusted basic	(G) Special allowance reserve deduction	(H) Additional basic (§ 405(a)(3))	(I) [4] Total annual phase II
Texas	P H Robinson	PHR2	7	0	0	487	493	560	14	0	488
Texas	P H Robinson	PHR3	7	0	0	679	685	578	15	0	504
Texas	P H Robinson	PHR4	19	0	0	779	798	707	18	0	617
Texas	Paint Creek	1	3	0	0	8	11	11	0	0	10
Texas	Paint Creek	2	3	0	0	8	11	12	0	0	11
Texas	Paint Creek	3	21	1	0	10	28	61	2	0	53
Texas	Paint Creek	4	1	0	0	104	105	118	3	0	103
Texas	Parkdale	1	11	0	0	24	34	41	1	0	36
Texas	Parkdale	2	16	0	0	48	62	75	2	0	65
Texas	Parkdale	3	21	1	0	43	61	67	2	0	76
Texas	Permian Basin	5	2	0	0	101	103	120	3	0	105
Texas	Permian Basin	6	318	8	0	526	800	945	24	0	825
Texas	Pirkey	1	22,597	572	0	757	20,364	22,597	570	0	19,738
Texas	Plant X	111B	0	0	0	0	0	0	0	0	0
Texas	Plant X	112B	0	0	0	2	2	1	0	0	1
Texas	Plant X	113B	0	0	0	89	89	34	1	0	30
Texas	Plant X	114B	0	0	0	0	0	3	0	0	3
Texas	Powerlane Plant	2	522	13	0	2	454	533	13	0	466
Texas	Powerlane Plant	3	39	1	0	3	37	43	1	0	38
Texas	R W Miller	1	2	0	0	53	55	62	2	0	54
Texas	R W Miller	2	0	0	0	98	98	112	3	0	98
Texas	R W Miller	3	1	0	0	217	218	208	5	0	180
Texas	Ray Olinger	BW2	5	0	0	55	60	60	2	0	52
Texas	Ray Olinger	BW3	9	0	0	71	79	98	2	0	86
Texas	Ray Olinger	CE1	9	0	0	34	42	38	1	0	33
Texas	Rio Pecos	5	1	0	0	63	64	79	2	0	69
Texas	Rio Pecos	6	2	0	0	177	179	196	5	0	171
Texas	River Crest	1	32	1	0	33	61	80	2	0	70
Texas	Sabine	1	3	0	0	149	152	233	6	0	203
Texas	Sabine	2	2	0	0	162	164	225	6	0	196
Texas	Sabine	3	7	0	0	569	575	574	14	0	502
Texas	Sabine	4	8	0	0	496	503	714	18	0	624
Texas	Sabine	5	4	0	0	318	322	447	11	0	391
Texas	Sam Bertron	SRB1	0	0	0	57	57	55	1	0	48
Texas	Sam Bertron	SRB2	0	0	0	18	18	38	1	0	33
Texas	Sam Bertron	SRB3	7	0	0	114	120	103	3	0	90
Texas	Sam Bertron	SRB4	3	0	0	76	79	90	2	0	79
Texas	Sam Seymour	1	17,210	436	0	849	15,782	17,210	434	0	15,033
Texas	Sam Seymour	2	18,748	475	0	988	17,255	18,748	473	0	16,376
Texas	Sam Seymour	3	11,992	304	0	0	10,405	11,992	303	0	10,474
Texas	San Angelo	2	2	0	0	159	161	187	5	0	163
Texas	San Miguel	**2	0	0	0	0	0	0	0	0	0
Texas	San Miguel	SM-1	18,994	481	0	594	17,075	18,994	479	0	16,591
Texas	Sandow	4	26,423	719	0	826	25,488	26,423	718	0	24,826
Texas	Seaholm	9	1	0	0	3	4	3	0	0	3
Texas	Sim Gideon	1	1	0	0	46	47	58	1	0	51
Texas	Sim Gideon	2	1	0	0	55	56	66	2	0	57

TABLE 2. -- PHASE II ALLOWANCE ALLOCATIONS

State	Plant Name	Boiler [1]	Allowances for years 2000–2009					Allowances for years 2010 and thereafter			
			(A) [2] Unadjusted basic	(B) Special allowance reserve deduction	(C) Additional basic (§405(a)(3))	(D) Total Bonus	(E) [3] Total annual phase II	(F) [2] Unadjusted basic	(G) Special allowance reserve deduction	(H) Additional basic (§ 405(a)(3))	(I) [4] Total annual phase II
Texas	Sim Gideon	3	7	0	0	271	277	366	9	0	320
Texas	Spencer	4	8	0	0	12	19	20	1	0	17
Texas	Spencer	5	11	0	0	13	23	26	1	0	22
Texas	Stryker Creek	1	19	0	0	153	170	157	4	0	137
Texas	Stryker Creek	2	25	1	0	503	525	642	16	0	561
Texas	T C Ferguson	1	3	0	0	250	253	289	7	0	253
Texas	T H Wharton	THW1	0	0	0	7	7	6	0	0	5
Texas	T H Wharton	THW2	5	0	0	92	97	93	2	0	82
Texas	Tnp One	U1	2,426	61	0	0	2,106	2,426	61	0	2,119
Texas	Tnp One	U2	4,000	101	0	0	3,472	4,000	101	0	3,494
Texas	Tnp One	**3	0	0	0	0	0	0	0	0	0
Texas	Tnp One	**4	0	0	0	0	0	0	0	0	0
Texas	Tolk Station	171B	16,035	406	0	748	14,662	16,035	405	0	14,006
Texas	Tolk Station	172B	15,884	402	0	542	14,326	15,884	401	0	13,874
Texas	Tradinghouse	1	19	0	0	575	592	589	15	0	514
Texas	Tradinghouse	2	45	1	0	954	994	1,030	26	0	900
Texas	Trinidad	7	1	0	0	5	6	4	0	0	4
Texas	Trinidad	8	1	0	0	0	1	3	0	0	3
Texas	Trinidad	9	2	0	0	133	135	131	3	0	115
Texas	Twin Oak	1	9,156	232	0	0	7,947	9,156	231	0	7,999
Texas	Twin Oak	2	6,457	163	0	0	5,603	6,457	163	0	5,640
Texas	V H Braunig	1	2	0	0	75	77	140	4	0	122
Texas	V H Braunig	2	3	0	0	118	121	160	4	0	140
Texas	V H Braunig	3	5	0	0	411	416	447	11	0	391
Texas	Valley	1	7	0	0	71	77	111	3	0	97
Texas	Valley	2	46	1	0	476	518	616	16	0	536
Texas	Valley	3	2	0	0	122	124	148	4	0	129
Texas	Victoria	5	7	0	0	0	6	7	0	0	6
Texas	Victoria	6	0	0	0	6	6	4	0	0	4
Texas	Victoria	7	1	0	0	109	110	116	3	0	101
Texas	Victoria	8	3	0	0	235	238	255	6	0	223
Texas	W A Parish	WAP1	1	0	0	56	57	58	1	0	51
Texas	W A Parish	WAP2	1	0	0	55	56	51	1	0	45
Texas	W A Parish	WAP3	0	0	0	245	245	181	5	0	156
Texas	W A Parish	WAP4	7	0	0	551	557	583	15	0	509
Texas	W A Parish	WAP5	24,960	632	0	1,036	22,693	24,960	630	0	21,892
Texas	W A Parish	WAP6	22,589	572	0	992	20,593	22,589	570	0	19,731
Texas	W A Parish	WAP7	16,386	415	0	802	15,020	16,386	414	0	14,312
Texas	W A Parish	WAP8	7,325	185	0	878	7,233	7,325	185	0	6,396
Texas	W B Tuttle	1	0	0	0	2	2	3	0	0	3
Texas	W B Tuttle	2	0	0	0	19	19	20	1	0	17
Texas	W B Tuttle	3	0	0	0	11	11	15	0	0	13
Texas	W B Tuttle	4	1	0	0	47	48	60	2	0	52
Texas	Webster	WEB1	0	0	0	14	14	6	0	0	5
Texas	Webster	WEB2	0	0	0	17	17	8	0	0	7
Texas	Webster	WEB3	4	0	0	339	343	365	9	0	319
Texas	Welsh	1	14,569	369	0	579	13,221	14,569	368	0	12,725

TABLE 2. -- PHASE II ALLOWANCE ALLOCATIONS

State	Plant Name	Boiler [1]	Allowances for years 2000–2009					Allowances for years 2010 and thereafter			
			(A) [2] Unadjusted basic	(B) Special allowance reserve deduction	(C) Additional basic (§405(a)(3))	(D) Total Bonus	(E) [3] Total annual phase II	(F) [2] Unadjusted basic	(G) Special allowance reserve deduction	(H) Additional basic (§ 405(a)(3))	(I) [4] Total annual phase II
Texas	Welsh	2	14,069	358	0	533	12,741	14,069	355	0	12,289
Texas	Welsh	3	16,560	419	0	727	15,097	16,560	418	0	14,465
Texas	Wilkes	1	8	0	0	23	30	68	2	0	57
Texas	Wilkes	2	1	0	0	117	118	108	3	0	92
Texas	Wilkes	3	1	0	0	128	129	84	2	0	73
Utah	Bonanza	1–1	10,059	255	0	1,962	10,709	10,059	254	0	8,788
Utah	Carbon	1	2,186	55	0	0	1,897	2,186	55	0	1,910
Utah	Carbon	2	2,855	72	0	0	2,478	2,855	72	0	2,494
Utah	Gadsby	1	28	1	0	0	24	28	1	0	24
Utah	Gadsby	2	466	12	0	1,262	1,667	466	12	0	407
Utah	Gadsby	3	1,734	44	0	747	2,252	1,734	44	0	1,514
Utah	Hale	1	1	0	0	0	1	1	0	0	1
Utah	Hunter (Emery)	1	8,517	216	0	0	7,390	8,517	215	0	7,439
Utah	Hunter (Emery)	2	9,096	230	0	0	7,893	9,096	230	0	7,945
Utah	Hunter (Emery)	3	12,859	326	0	0	11,158	12,859	325	0	11,232
Utah	Huntington	1	9,057	229	0	0	7,859	9,057	229	0	7,911
Utah	Huntington	2	11,145	282	0	0	9,671	11,145	281	0	9,735
Utah	Intermountain	1SGA	3,285	83	0	0	2,850	3,285	83	0	2,869
Utah	Intermountain	2SGA	3,308	84	0	0	2,870	3,308	84	0	2,889
Vermont	J C Mcnell	1	43	1	0	66	104	43	1	0	38
Virginia	Bremo Bluff	3	2,017	51	0	264	2,015	2,017	51	0	1,762
Virginia	Bremo Bluff	4	5,897	149	0	0	5,117	5,897	149	0	5,151
Virginia	Chesapeake	1	871	22	0	1,355	2,111	871	22	0	761
Virginia	Chesapeake	2	1,141	29	0	1,211	2,201	1,141	29	0	996
Virginia	Chesapeake	3	5,210	132	0	0	4,521	5,210	132	0	4,550
Virginia	Chesapeake	4	6,685	169	0	22	5,823	6,685	169	0	5,839
Virginia	Chesterfield	3	2,118	54	0	707	2,545	2,118	53	0	1,850
Virginia	Chesterfield	4	5,336	135	0	0	4,830	5,336	135	0	4,661
Virginia	Chesterfield	5	10,474	265	0	0	9,068	10,474	264	0	9,149
Virginia	Chesterfield	6	18,788	476	0	697	16,999	18,788	474	0	16,411
Virginia	Chesterfield	**8A	1,585	40	0	0	1,375	1,585	40	0	1,384
Virginia	Chesterfield	**8B	471	12	0	0	409	471	12	0	411
Virginia	Clinch River	1	6,048	153	0	65	5,303	6,048	153	0	5,262
Virginia	Clinch River	2	6,985	177	0	0	6,061	6,985	176	0	6,102
Virginia	Clinch River	3	6,458	163	0	0	5,604	6,458	163	0	5,641
Virginia	Clover	1	3,357	85	0	0	2,913	3,357	85	0	2,932
Virginia	Clover	2	3,357	85	0	0	2,913	3,357	85	0	2,932
Virginia	Glen Lyn	6	5,990	152	0	293	5,491	5,990	151	0	5,232
Virginia	Glen Lyn	51	930	24	0	339	1,145	930	23	0	813
Virginia	Glen Lyn	52	898	23	0	328	1,108	898	23	0	784
Virginia	Possum Point	1	0	0	0	0	0	0	0	0	0
Virginia	Possum Point	2	0	0	0	0	0	0	0	0	0
Virginia	Possum Point	3	2,570	65	0	396	2,828	2,570	65	0	2,245
Virginia	Possum Point	4	7,684	194	0	0	6,668	7,684	194	0	6,712
Virginia	Possum Point	5	4,955	125	0	0	4,300	4,955	125	0	4,328
Virginia	Potomac River	1	1,883	48	0	687	2,320	1,883	48	0	1,844
Virginia	Potomac River	2	1,912	48	0	636	2,295	1,912	48	0	1,870

TABLE 2. -- PHASE II ALLOWANCE ALLOCATIONS

State	Plant Name	Boiler [1]	Allowances for years 2000–2009					Allowances for years 2010 and thereafter			
			(A) [2] Unadjusted basic	(B) Special allowance reserve deduction	(C) Additional basic (§405(a)(3))	(D) Total Bonus	(E) [3] Total annual phase II	(F) [2] Unadjusted basic	(G) Special allowance reserve deduction	(H) Additional basic (§ 405(a)(3))	(I) [4] Total annual phase II
Virginia	Potomac River	3	3,150	60	0	0	2,733	3,150	60	0	2,751
Virginia	Potomac River	4	3,471	68	0	0	3,011	3,471	68	0	3,031
Virginia	Potomac River	5	3,326	64	0	0	2,868	3,326	64	0	2,907
Virginia	Yorktown	1	5,337	135	0	0	4,631	5,337	135	0	4,661
Virginia	Yorktown	2	5,137	130	0	176	4,635	5,137	130	0	4,487
Virginia	Yorktown	3	7,205	182	0	0	6,253	7,205	182	0	6,293
Washington	Centralia	BW21	21,797	552	0	0	18,914	21,797	550	0	19,039
Washington	Centralia	BW22	23,240	588	0	0	20,164	23,240	587	0	20,299
Washington	Kettle Falls	1	1	0	0	95	96	96	2	0	84
Washington	Shuffleton	1	0	0	0	0	0	0	0	0	0
Washington	Shuffleton	2	0	0	0	0	0	0	0	0	0
Washington	Shuffleton	3	0	0	0	0	0	0	0	0	0
West Virginia	Albright	1	2,256	57	0	0	1,958	2,256	57	0	1,970
West Virginia	Albright	2	2,347	59	0	0	2,037	2,347	59	0	2,050
West Virginia	Albright	3	5,119	130	119	0	4,560	5,118	129	119	4,591
West Virginia	Fort Martin	1	19,963	505	465	0	17,787	19,963	504	465	17,902
West Virginia	Fort Martin	2	19,776	501	460	0	17,620	19,776	499	460	17,734
West Virginia	Harrison	1	23,337	591	543	0	20,792	23,337	589	543	20,927
West Virginia	Harrison	2	22,152	561	516	0	19,738	22,152	559	516	19,865
West Virginia	Harrison	3	19,922	504	464	0	17,750	19,922	503	464	17,865
West Virginia	John E Amos	1	25,814	653	0	0	22,396	25,814	652	0	22,547
West Virginia	John E Amos	2	29,597	750	0	0	25,676	29,597	748	0	25,851
West Virginia	John E Amos	3	47,438	1,202	0	0	41,159	47,438	1,199	0	41,435
West Virginia	Kammer	1	8,996	228	209	0	8,015	8,996	227	209	8,067
West Virginia	Kammer	2	9,339	236	217	0	8,322	9,339	236	217	8,374
West Virginia	Kammer	3	8,347	211	194	0	7,438	8,347	211	194	7,485
West Virginia	Kanawha River	1	4,541	115	0	488	4,428	4,541	115	0	3,966
West Virginia	Kanawha River	2	4,043	102	0	753	4,262	4,043	102	0	3,531
West Virginia	Mitchell	1	21,108	534	491	0	18,807	21,108	533	491	18,928
West Virginia	Mitchell	2	21,842	553	508	0	19,460	21,842	551	508	19,587
West Virginia	Mountaineer (1301)	1	40,253	1,020	0	0	34,924	40,253	1,017	0	35,160
West Virginia	Mt Storm	1	20,987	531	489	0	18,700	20,987	530	489	18,820
West Virginia	Mt Storm	2	19,689	498	458	0	17,542	19,689	497	458	17,656
West Virginia	Mt Storm	3	20,365	516	474	0	18,145	20,365	514	474	18,262
West Virginia	Phil Sporn	11	2,776	70	0	700	3,110	2,776	70	0	2,425
West Virginia	Phil Sporn	21	2,336	59	0	920	2,947	2,336	59	0	2,040
West Virginia	Phil Sporn	31	3,345	85	0	386	3,268	3,345	84	0	2,922
West Virginia	Phil Sporn	41	2,626	66	0	755	3,034	2,626	66	0	2,294
West Virginia	Phil Sporn	51	11,999	304	0	117	10,529	11,999	303	0	10,461
West Virginia	Pleasants	1	20,115	509	0	0	17,454	20,115	508	0	17,570
West Virginia	Pleasants	2	23,076	584	0	0	20,022	23,076	583	0	20,156
West Virginia	Rivesville	7	794	20	0	542	1,231	794	20	0	694
West Virginia	Rivesville	8	2,379	60	0	446	2,511	2,379	60	0	2,078
West Virginia	Willow Island	1	1,097	28	0	536	1,488	1,097	28	0	958
West Virginia	Willow Island	2	4,595	116	0	663	4,651	4,595	116	0	4,014
Wisconsin	Alma	B4	1,363	34	0	0	1,183	1,363	34	0	1,191
Wisconsin	Alma	B5	2,178	55	0	0	1,890	2,178	55	0	1,902

TABLE 2. -- PHASE II ALLOWANCE ALLOCATIONS

State	Plant Name	Boiler [1]	Allowances for years 2000–2009					Allowances for years 2010 and thereafter			
			(A) [2] Unadjusted basic	(B) Special allowance reserve deduction	(C) Additional basic (§405(a)(3))	(D) Total Bonus	(E) [3] Total annual phase II	(F) [2] Unadjusted basic	(G) Special allowance reserve deduction	(H) Additional basic (§ 405(a)(3))	(I) [4] Total annual phase II
Wisconsin	Bay Front	1	583	14	0	537	1,043	583	14	0	509
Wisconsin	Bay Front	2	606	16	0	0	524	606	16	0	529
Wisconsin	Bay Front	3	0	0	0	0	0	0	0	0	0
Wisconsin	Bay Front	4	17	0	0	17	33	17	0	0	14
Wisconsin	Bay Front	5	155	4	0	144	279	155	4	0	135
Wisconsin	Blount Street	3	6	0	0	0	6	6	0	0	6
Wisconsin	Blount Street	5	7	0	0	0	7	7	0	0	6
Wisconsin	Blount Street	6	7	0	0	0	7	7	0	0	7
Wisconsin	Blount Street	7	132	4	0	0	115	132	4	0	114
Wisconsin	Blount Street	8	812	21	0	0	705	812	21	0	709
Wisconsin	Blount Street	9	1,042	26	0	0	905	1,042	26	0	910
Wisconsin	Blount Street	11	1	0	0	0	1	1	0	0	1
Wisconsin	Columbia	1	17,694	448	0	0	15,353	17,694	447	0	15,455
Wisconsin	Columbia	2	10,007	253	0	0	8,684	10,007	253	0	8,740
Wisconsin	Combustion Turbine	**2	0	0	0	0	0	0	0	0	0
Wisconsin	Commerce	25	2	0	0	2	4	4	0	0	4
Wisconsin	Edgewater	3	1,413	36	0	0	1,226	1,413	36	0	1,234
Wisconsin	Edgewater	4	11,880	301	0	0	10,308	11,880	300	0	10,377
Wisconsin	Edgewater	5	13,094	331	0	0	11,362	13,094	331	0	11,437
Wisconsin	Genoa	1	9,164	232	0	0	7,952	9,164	231	0	8,005
Wisconsin	J P Madgett	81	8,235	208	0	229	7,375	8,235	206	0	7,193
Wisconsin	Manitowoc	6	766	18	0	0	666	766	18	0	669
Wisconsin	Manitowoc	7	929	24	0	0	805	929	23	0	812
Wisconsin	Manitowoc	8	27	0	0	0	24	27	0	0	24
Wisconsin	Manitowoc	9	0	0	0	0	0	0	0	0	0
Wisconsin	Na -- 7222	**1	0	0	0	0	0	0	0	0	0
Wisconsin	Na 1 -- 7203	**CT3	0	0	0	0	0	0	0	0	0
Wisconsin	Na 1 -- 7203	**CT4	0	0	0	0	0	0	0	0	0
Wisconsin	Na 1 -- 7205	**1	0	0	0	0	0	0	0	0	0
Wisconsin	Na 1 -- 7205	**2	0	0	0	0	0	0	0	0	0
Wisconsin	Na 1 -- 7205	**3	0	0	0	0	0	0	0	0	0
Wisconsin	Na3	**1	0	0	0	0	0	0	0	0	0
Wisconsin	Na4	**1	0	0	0	0	0	0	0	0	0
Wisconsin	Nelson Dewey	1	2,884	73	0	0	2,502	2,884	73	0	2,519
Wisconsin	Nelson Dewey	2	3,206	81	0	0	2,784	3,206	81	0	2,802
Wisconsin	North Oak Creek	1	2,420	61	0	0	2,101	2,420	61	0	2,114
Wisconsin	North Oak Creek	2	2,377	60	0	0	2,063	2,377	60	0	2,076
Wisconsin	North Oak Creek	3	2,434	62	0	0	2,112	2,434	61	0	2,126
Wisconsin	North Oak Creek	4	2,837	72	0	0	2,462	2,837	72	0	2,478
Wisconsin	Pleasant Prairie	1	13,466	341	0	0	11,703	13,466	340	0	11,766
Wisconsin	Pleasant Prairie	2	19,060	482	0	0	16,540	19,060	481	0	16,648
Wisconsin	Port Washington	1	604	15	0	0	524	604	15	0	528
Wisconsin	Port Washington	2	1,179	30	0	0	1,022	1,179	30	0	1,030
Wisconsin	Port Washington	3	981	25	0	0	851	981	25	0	857
Wisconsin	Port Washington	4	919	23	0	0	797	919	23	0	803
Wisconsin	Port Washington	5	1,213	31	0	0	1,052	1,213	31	0	1,059
Wisconsin	Pulliam	3	159	4	0	0	136	159	4	0	139

TABLE 2. -- PHASE II ALLOWANCE ALLOCATIONS

State	Plant Name	Boiler [1]	Allowances for years 2000–2009					Allowances for years 2010 and thereafter			
			(A) [2] Unadjusted basic	(B) Special allowance reserve deduction	(C) Additional basic (§405(a)(3))	(D) Total Bonus	(E) [3] Total annual phase II	(F) [2] Unadjusted basic	(G) Special allowance reserve deduction	(H) Additional basic (§ 405(a)(3))	(I) [4] Total annual phase II
Wisconsin	Pulliam	4	238	6	0	0	206	238	6	0	208
Wisconsin	Pulliam	5	694	18	0	0	601	694	18	0	606
Wisconsin	Pulliam	6	904	23	0	0	784	904	23	0	789
Wisconsin	Pulliam	7	2,326	59	0	0	2,018	2,326	59	0	2,031
Wisconsin	Pulliam	8	3,603	91	0	0	3,127	3,603	91	0	3,147
Wisconsin	Rock River	1	1,782	45	0	0	1,547	1,782	45	0	1,557
Wisconsin	Rock River	2	1,693	43	0	0	1,469	1,693	43	0	1,479
Wisconsin	South Oak Creek	5	4,440	112	0	0	3,854	4,440	112	0	3,878
Wisconsin	South Oak Creek	6	5,555	141	0	0	4,820	5,555	140	0	4,852
Wisconsin	South Oak Creek	7	7,433	188	0	0	6,449	7,433	188	0	6,492
Wisconsin	South Oak Creek	8	7,303	185	0	0	6,337	7,303	184	0	6,379
Wisconsin	Stoneman	B1	202	6	0	0	175	202	6	0	176
Wisconsin	Stoneman	B2	255	6	0	0	222	255	6	0	223
Wisconsin	Valley	1	1,790	45	0	238	1,792	1,790	45	0	1,564
Wisconsin	Valley	2	1,809	46	0	241	1,811	1,809	46	0	1,580
Wisconsin	Valley	3	1,658	42	0	503	1,942	1,658	42	0	1,448
Wisconsin	Valley	4	1,613	41	0	489	1,889	1,613	41	0	1,409
Wisconsin	West Marinette	**33	0	0	0	0	0	0	0	0	0
Wisconsin	Weston	1	871	22	0	0	756	871	22	0	761
Wisconsin	Weston	2	2,068	52	0	0	1,796	2,068	52	0	1,807
Wisconsin	Weston	3	11,089	281	0	0	9,622	11,089	280	0	9,686
Wyoming	Dave Johnston	BW41	5,155	130	0	195	4,668	5,155	130	0	4,503
Wyoming	Dave Johnston	BW42	5,015	127	0	183	4,535	5,015	127	0	4,380
Wyoming	Dave Johnston	BW43	9,711	246	0	332	8,759	9,711	245	0	8,482
Wyoming	Dave Johnston	BW44	7,278	184	0	435	6,750	7,278	184	0	6,357
Wyoming	Jim Bridger	BW71	22,967	581	0	814	20,742	22,967	580	0	20,061
Wyoming	Jim Bridger	BW72	22,486	569	0	791	20,303	22,486	568	0	19,640
Wyoming	Jim Bridger	BW73	21,533	545	0	746	19,431	21,533	544	0	18,808
Wyoming	Jim Bridger	BW74	3,797	96	0	741	4,036	3,797	96	0	3,318
Wyoming	Laramie River	1	4,823	122	0	891	5,076	4,823	122	0	4,212
Wyoming	Laramie River	2	4,095	104	0	719	4,272	4,095	103	0	3,577
Wyoming	Laramie River	3	3,660	93	0	620	3,795	3,660	92	0	3,197
Wyoming	Naughton	1	5,672	144	0	239	5,160	5,672	143	0	4,854
Wyoming	Naughton	2	7,301	185	0	352	6,687	7,301	184	0	6,377
Wyoming	Naughton	3	5,566	141	0	345	5,175	5,566	141	0	4,861
Wyoming	Wyodak	BW91	20,226	512	0	616	18,167	20,226	511	0	17,666

Notes:

[1] ** in the boiler identifier denotes a planned unit or a unit for which the boiler number is unavailable.

[2] The unadjusted allowances shown in columns (A) and (F) for the Twin Oak unit 2 in Texas and Clover units 1 and 2 in Virginia assume that these units fully qualify for §405(g)(4). If they do not, then Twin Oak 2 will receive 1,760 unadjusted basic allowances, Clover 1 will receive 2,796 unadjusted basic allowances, and Clover 2 will receive 2,796 unadjusted basic allowances pursuant to §405(g)(2).

[3] Column (E) is calculated as follows:
Column (E) = Adjusted Basic Allowances for 2000 (*not shown*) – Column (B) – Conservation/Renewable reserve deduction (*not shown*) – Repowering deduction (*not shown*) + Column (C) + Column (D). The adjusted basic allowances can be estimated as: Column (A) * 0.9011. The total deduction for both the

Conservation/Renewable reserve and for Repowering can be estimated as: Column (B) * 0.3185. The results may not agree exactly with those presented in this table due to rounding.

Note: 0.9011 = factor used to pro rate the allowances in Column (A) to produce the U.S. total of 8.9 million adjusted basic allowances.
(8,900,000 ÷ U.S. total unadjusted basic allowances for 2000–2009 = 0.9011).
0.3185 = factor used to subtract the allowances withheld for the conservation/renewable energy and repowering reserves not shown in this table (30,000 and 50,000 allowances annually, respectively).
((30,000 + 50,000) ÷ 250,000 = 0.3185)

[4] Column (I) is calculated as follows:

Column (I) = Adjusted basic allowances for 2010 (*not shown*) – Column (G) + Column (H). The adjusted basic allowances for 2010 can be estimated as: Column (F) * 0.8987. The results may not agree exactly with those presented in this table due to rounding.

Note: 0.8987 = factor used to pro rate the allowances in Column (F) to produce the U.S. total of 8.9 million adjusted basic allowances.
(8,900,000 ÷ U.S. total unadjusted basic allowances for 2010 and thereafter = 0.8987).

BILLING CODE 6560–50–C

(c) *Allowance allocation for units under § 73.18.* Upon adequate submittal of information under § 73.18(b) and confirmation of unit eligibility under § 73.18(c), the Administrator will allocate allowances to the unit account:

(1) In the amount specified in Table 3 Column E to be held in the future year subaccounts representing calendar years 2000 through 2009; and

(2) In the amount specified in the Table 3 Column I to be held in the future year subaccounts representing calendar years 2010 and each year thereafter.

BILLING CODE 6560-50-M

TABLE 3. -- PHASE II ALLOWANCE ALLOCATIONS FOR §405(g)(4) ELIGIBLE UNITS

State	Plant Name	Boiler [1]	Allowances for years 2000-2009					Allowances for years 2010 and thereafter			
			(A) [2] Unadjusted basic	(B) Special allowance reserve deduction	(C) Additional basic (§405(a)(3))	(D) Total Bonus	(E) [3] Total annual phase II	(F) [2] Unadjusted basic	(G) Special allowance reserve deduction	(H) Additional basic (§ 405(a)(3))	(I) [4] Total annual phase II
Alabama	Mcwilliams	**4	973	25	0	0	844	973	25	0	849
Arizona	Springerville	3	2,234	57	0	0	1,838	2,234	56	0	1,952
California	Harbor Gen Station	**10	451	11	0	0	392	451	11	0	394
California	Harbor Gen Station	**10A	798	20	0	0	693	798	20	0	697
California	Harbor Gen Station	**10B	798	20	0	0	693	798	20	0	697
Florida	G W Ivey	**22	63	2	0	0	55	63	2	0	55
Florida	Indian River	**D	730	18	0	0	634	730	18	0	638
Florida	Intercession City	**7	805	20	0	0	699	805	20	0	703
Florida	Intercession City	**8	805	20	0	0	699	805	20	0	703
Florida	Intercession City	**9	805	20	0	0	699	805	20	0	703
Florida	Intercession City	**10	805	20	0	0	699	805	20	0	703
Florida	Lauderdale	**4GT1	1,083	27	0	0	941	1,083	27	0	948
Florida	Lauderdale	**4GT2	1,083	27	0	0	941	1,083	27	0	948
Florida	Lauderdale	**5GT1	1,083	27	0	0	941	1,083	27	0	948
Florida	Lauderdale	**5GT2	1,083	27	0	0	941	1,083	27	0	948
Florida	Martin	**3ST	960	24	0	0	833	960	24	0	839
Florida	Martin	**4ST	960	24	0	0	833	960	24	0	839
Florida	Martin	**3GT1	1,457	37	0	0	1,265	1,457	37	0	1,272
Florida	Martin	**3GT2	1,457	37	0	0	1,265	1,457	37	0	1,272
Florida	Martin	**4GT1	1,457	37	0	0	1,265	1,457	37	0	1,272
Florida	Martin	**4GT2	1,457	37	0	0	1,265	1,457	37	0	1,272
Illinois	Lakeside	GT1	350	9	0	0	303	350	9	0	306
Indiana	Na 1 -- 7228	**1	1,265	32	0	0	1,096	1,265	32	0	1,105
Indiana	Na 1 -- 7228	**2	1,265	32	0	0	1,096	1,265	32	0	1,105
Indiana	Na 1 -- 7228	**3	1,265	32	0	0	1,096	1,265	32	0	1,105
Iowa	Na 1 -- 7230	**1	487	12	0	0	424	487	12	0	426
Kansas	Wamego	**NA1	19	0	0	0	17	19	0	0	17
Maryland	Coal Gas Cc 1	**CT2	1,236	31	0	0	1,073	1,236	31	0	1,080
Maryland	Easton 2	**25	73	2	0	0	64	73	2	0	64
Maryland	Perryman	**51	1,304	33	0	0	1,131	1,304	33	0	1,139
Minnesota	Na 1 -- 7237	**1	973	25	0	0	844	973	25	0	849
Mississippi	Moselle	**4	779	20	0	0	676	779	20	0	680
Mississippi	Moselle	**5	237	6	0	0	206	237	6	0	207
Missouri	Combustion Turbine 1	**1	1,022	26	0	0	887	1,022	26	0	892
Missouri	Combustion Turbine 2	**2	1,022	26	0	0	887	1,022	26	0	892
Missouri	Empire Energy Center	**3	641	16	0	0	557	641	16	0	560
Missouri	Lake Road	**6	730	18	0	0	634	730	18	0	638
Nebraska	Na 1 -- 7019	**NA1	779	20	0.	0	676	779	20	0	680
Nevada	Clark	**9	534	14	0	0	462	534	13	0	467
Nevada	Clark	**10	534	14	0	0	462	534	13	0	467
Nevada	Harry Allen	**GT1	681	17	0	0	592	681	17	0	595
Nevada	Harry Allen	**GT2	681	17	0	0	592	681	17	0	595
New Jersey	Butler	**1	341	9	0	0	295	341	9	0	297
New Jersey	Butler	**3	114	3	0	0	99	114	3	0	99
New Jersey	Na 1 -- 7139	**1	973	25	0	0	844	973	25	0	849
New Jersey	Na 2 -- 7140	**1	2,920	74	0	0	2,533	2,920	74	0	2,550
Ohio	Dover	**7	171	4	0	0	148	171	4	0	150
Ohio	Woodsdale	**GT6	337	9	0	0	292	337	9	0	294
Ohio	Woodsdale	**GT7	337	9	0	0	292	337	9	0	294
Pennsylvania	Trenton Cogen Proj	**1	1,386	35	0	0	1,203	1,386	35	0	1,211
South Carolina	Na 1 -- 7106	**GT1	905	23	0	0	785	905	23	0	790

TABLE 3. -- PHASE II ALLOWANCE ALLOCATIONS FOR §405(g)(4) ELIGIBLE UNITS

State	Plant Name	Boiler [1]	Allowances for years 2000–2009					Allowances for years 2010 and thereafter			
			(A) [2] Unadjusted basic	(B) Special allowance reserve deduction	(C) Additional basic (§405(a)(3))	(D) Total Bonus	(E) [3] Total annual phase II	(F) [2] Unadjusted basic	(G) Special allowance reserve deduction	(H) Additional basic (§ 405(a)(3))	(I) [4] Total annual phase II
South Carolina	Na 2 -- 7107	**GT2	905	23	0	0	785	905	23	0	790
South Carolina	Na 3 -- 7106	**GT3	905	23	0	0	785	905	23	0	790
South Dakota	Ct	**5	389	10	0	0	338	389	10	0	340
Texas	R W Miller	**4	973	25	0	0	844	973	25	0	849
Texas	R W Miller	**5	973	25	0	0	844	973	25	0	849
Texas	Twin Oak	2	6,457	163	0	0	5,603	6,457	163	0	5,640
Utah	Bonanza	**2	3,416	86	0	0	2,965	3,416	86	0	2,964
Virginia	Clover	1	3,357	85	0	0	2,913	3,357	85	0	2,932
Virginia	Clover	2	3,357	85	0	0	2,913	3,357	85	0	2,932
Virginia	East Chandler	**2	19	0	0	0	17	19	0	0	17
Wisconsin	Combustion Turbine	**1	701	18	0	0	608	701	18	0	612
Wisconsin	Concord	**1	144	4	0	0	125	144	4	0	125
Wisconsin	Concord	**2	144	4	0	0	125	144	4	0	125
Wisconsin	Concord	**3	144	4	0	0	125	144	4	0	125
Wisconsin	Concord	**4	144	4	0	0	125	144	4	0	125
Wisconsin	Na 1 -- 7203	**CT1	730	18	0	0	634	730	18	0	638
Wisconsin	Na 1 -- 7203	**CT2	44	1	0	0	39	44	1	0	39
Wisconsin	Na2	**1	874	22	0	0	759	874	22	0	763
Wisconsin	Paris	**1	142	4	0	0	123	142	4	0	124
Wisconsin	Paris	**2	142	4	0	0	123	142	4	0	124
Wisconsin	Paris	**3	142	4	0	0	123	142	4	0	124
Wisconsin	Paris	**4	142	4	0	0	123	142	4	0	124

Notes:

[1] ** in the boiler identifier denotes a planned unit or a unit for which the boiler number is unavailable.

[2] The unadjusted allowances shown in columns (A) and (F) for the Twin Oak unit 2 in Texas and Clover units 1 and 2 in Virginia assume that these units fully qualify for §405(g)(4). If they do not, then Twin Oak 2 will receive 1,760 unadjusted basic allowances, Clover 1 will receive 2,796 unadjusted basic allowances, and Clover 2 will receive 2,796 unadjusted basic allowances pursuant to §405(g)(2).

[3] Column (E) is calculated as follows:

Column (E) = Adjusted Basic Allowances for 2000 (*not shown*) – Column (B) – Conservation/Renewable reserve deduction (*not shown*) – Repowering deduction (*not shown*) + Column (C) + Column (D). The adjusted basic allowances can be estimated as: Column (A) * 0.9011. The total deduction for both the Conservation/Renewable reserve and for Repowering can be estimated as: Column (B) * 0.3165. The results may not agree exactly with those presented in this table due to rounding.

Note: 0.9011 = factor used to pro rate the allowances in Column (A) to produce the U.S. total of 8.9 million adjusted basic allowances.
(8,900,000 ÷ U.S. total unadjusted basic allowances for 2000–2009 = 0.9011).
0.3165 = factor used to subtract the allowances withheld for the conservation/renewable energy and repowering reserves not shown in this table (30,000 and 50,000 allowances annually, respectively).
((30,000 + 50,000) ÷ 250,000 = 0.3165)

[4] Column (I) is calculated as follows:

Column (I) = Adjusted basic allowances for 2010 (*not shown*) – Column (G) + Column (H). The adjusted basic allowances for 2010 can be estimated as: Column (F) * 0.6987. The results may not agree exactly with those presented in this table due to rounding.

Note: 0.6987 = factor used to pro rate the allowances in Column (F) to produce the U.S. total of 8.9 million adjusted basic allowances.
(8,900,000 ÷ U.S. total unadjusted basic allowances for 2010 and thereafter = 0.6987).

BILLING CODE 6560-50-C

(d) *Allowance allocation for units under § 73.19.* (1) Upon submittal of adequate information under § 73.19(b) and confirmation of unit eligibility under § 73.19, the Administrator will allocate allowances to the unit account:

(i) In the amount specified in Table 2 Column E to be held in the future year subaccounts representing calendar years 2000 through 2009; and

(ii) In the amount specified in the Table 2 Column I to be held in the future year subaccounts representing calendar years 2010 and each year thereafter.

(2) Units listed in Table 4 which do not submit adequate information under § 73.19(b) or which are not eligible under § 73.19 will be allocated allowances as calculated under § 73.11.

BILLING CODE 6560-50-M

TABLE 4. -- PHASE II ALLOWANCE ALLOCATIONS FOR §405(i)(2) ELIGIBLE UNITS [1]

State	Plant Name	Boiler	Allowances for years 2000–2009			Allowances for years 2010 and thereafter		
			(A) [2]	(B)	(C) [3]	(D) [4]	(E)	(F) [5]
			Unadjusted basic	Increment for §405(i)(2)	Unadjusted basic, less §405(i)(2) increment	Unadjusted basic	Increment for §405(i)(2)	Unadjusted basic, less §405(i)(2) increment
Florida	Anclote	1	11,742	1,403	10,339	11,739	1,403	10,336
Florida	Anclote	2	12,422	1,529	10,893	12,420	1,529	10,891
Michigan	Monroe	1	27,243	198	27,045	27,243	198	27,045
Michigan	Monroe	2	28,273	495	27,778	28,273	495	27,778
Michigan	Monroe	3	26,466	445	26,021	26,466	445	26,021
Michigan	Monroe	4	29,065	930	28,135	29,065	930	28,135

Notes:

[1] The unadjusted allowances shown in columns (A) and (D) for the units in this table and in columns (A) and (F) of Table 2 assume that these units fully qualify for §405(i)(2). If they do not, then they will receive the unadjusted basic allowances shown in columns (C) and (F) of this table. Please note that the unadjusted basic allowances shown will be adjusted to reach the 8.9 million ton overall cap on allowances, and furthermore that deductions for the Conservation and Renewable Energy Reserve, the Repowering Reserve, and the Special Allowance Reserve will also be deducted from the allowances shown herein.

[2] Equal to the Unadjusted basic allowances shown in column (A) of Table 2.

[3] Equal to column (A) minus column (B).

[4] Equal to the Unadjusted basic allowances shown in column (F) of Table 2.

[5] Equal to column (D) minus column (E).

BILLING CODE 6560-50-C

§ 73.11 Revision of allocations.

No later than June 1, 1998, the Administrator will allocate allowances to the unit accounts for each unit listed in Tables 2 or 3 of § 73.10, instead of the number of allowances specified in Tables 2, 3, and 4, as follows:

(a) The Administrator will allocate allowances to be held in the future year subaccounts representing calendar years 2000 through 2009 as follows:

(1) Units eligible for allowances under § 73.19(a) and that documentation according to § 73.19(b) will have unadjusted basic allowances as listed in Table 2 Column A.

(2) The Administrator will calculate unadjusted basic allowances (Year 2000) for existing units with approved repowering extension plans under § 72.44 of this chapter according to the following equation, instead of unadjusted basic allowances listed in Table 2 Column A:

$$\text{Unit's Unadjusted Basic Allowances (Year 2000)} = \text{Baseline} \times 1.2 / 2000$$

(3) Adjustment of basic allowances. The Administrator will adjust each unit's unadjusted basic allowances as listed in Table 2 Column A, Table 3 Column A and Table 4 Column C, and as stated in paragraphs (a) (1) and (2) of this section, as follows:

$$\text{Unit's Adjusted Basic Allowances (Year 2000)} = \text{Unit's Unadjusted Basic Allowances (Year 2000)} \times \frac{8{,}900{,}000}{\text{Sum of All Unit's Unadjusted Basic Allowances (Year 2000)}}$$

(4) Repowering adjustment. The Administrator will calculate a repowering deduction according to the following equation:

$$\text{Repowering Deduction} = \text{Annual Set Aside} \times \frac{\text{Unit's Adjusted Basic Allowances (Year 2000)}}{8{,}900{,}000}$$

where:

Set Aside=Sum of all repowering allowances for the year 2000 under 40 CFR 73.21

Annual Set Aside=Set Aside/10

(5) Special allowance reserve deduction. The Administrator will calculate a Special Allowance Deduction according to the following equation:

$$\text{Special Allowance Deduction} = 250{,}000 \times \frac{\text{Unit's Adjusted Basic Allowances (Year 2000)}}{8{,}900{,}000}$$

(6) Conservation and renewable energy reserve. The Administrator will calculate the Conservation Deduction according to the following equation:

$$\text{Conservation Deduction} = 30{,}000 \times \frac{\text{Unit's Adjusted Basic Allowances (Year 2000)}}{8{,}900{,}000}$$

(7) Final allowance allocations. (i) (A) According to paragraphs (a) (1) through (6) of this section, the Administrator will revise the allowances allocated to each unit listed in Table 2 of § 73.10 and will allocate to each unit's subaccount representing calendar years 2000 through 2009 Final Revised Phase II Allowances according to the following equation:

$$\text{Unit's Final Revised Phase II Allowances (Year 2000)} = \text{Unit's Adjusted Basic Allowances (Year 2000)} + \text{Number for Unit in Table 2 Column C} - \text{Repowering Deduction} - \text{Conservation Deduction} - \text{Special Allowance Deduction} + \text{Number for Unit in Table 2 Column D}$$

(B) According to paragraphs (a) (1) through (6) of this section, the Administrator will revise the allowances allocated to each unit listed in Table 3 of § 73.10 and will allocate to each unit's subaccount representing calendar years 2000 through 2009 Final Revised Phase II Allowances according to the following equation:

$$\text{Unit's Final Revised Phase II Allowances (Year 2000)} = \text{Unit's Adjusted Basic Allowances (Year 2000)} + \text{Number for Unit in Table 3 Column C} - \text{Repowering Deduction} - \text{Conservation Deduction} - \text{Special Allowance Deduction} + \text{Number for Unit in Table 3 Column D}$$

(C) According to paragraphs (a) (1) through (6) of this section, the Administrator will revise the allowances allocated to each unit listed in Table 4 of § 73.10 (and not eligible for allocations under Table 2) and will allocate to each unit's subaccount representing calendar years 2000 through 2009 Final Revised Phase II Allowances according to the following equation:

$$\text{Unit's Final Revised Phase II Allowances (Year 2000)} = \text{Unit's Adjusted Basic Allowances (Year 2000)} + \text{Number for Unit in Table 4 Column C} - \text{Repowering Deduction} - \text{Conservation Deduction} - \text{Special Allowance Deduction} + \text{Number for Unit in Table 4 Column D}$$

(ii) (A) If, as of January 1, 1998, both the auction and sales under subpart E of this part are terminated as provided for in subpart E, instead of allowances under paragraph (a)(7)(i) of this section, the Administrator will revise the allowances allocated to each unit listed in Table 2 of § 73.10 and will allocate to each unit's subaccount representing calendar years 2000 through 2009 Final Revised Phase II Allowances according to the following equation:

$$\text{Unit's Final Revised Phase II Allowances (Year 2000)} = \text{Unit's Adjusted Basic Allowances (Year 2000)} + \text{Number for Unit in Table 2 Column C} - \text{Repowering Deduction} - \text{Conservation Deduction} + \text{Number for Unit in Table 2 Column D}$$

(B) If, as of January 1, 1998, both the auction and sales under subpart E of this part are terminated as provided for in subpart E, instead of allowances under paragraph (a)(7)(i) of this section, the Administrator will revise the allowances allocated to each unit listed in Table 3 of § 73.10 and will allocate to each unit's subaccount representing calendar years 2000 through 2009 Final Revised Phase II Allowances according to the following equation:

$$\text{Unit's Final Revised Phase II Allowances (Year 2000)} = \text{Unit's Adjusted Basic Allowances (Year 2000)} + \text{Number for Unit in Table 3 Column C} - \text{Repowering Deduction} - \text{Conservation Deduction} + \text{Number for Unit in Table 3 Column D}$$

(b) The Administrator will allocate allowances to be held in the future year subaccounts representing calendar years 2010 and each year thereafter as follows:

(1) Units eligible for allowances under § 73.19(a) and that documentation according to § 73.19(b) will have unadjusted basic allowances as listed in Table 2 Column A.

(2) The Administrator will calculate unadjusted basic allowances (Year 2010) for units with approved repowering extension plans under § 72.44 of this chapter according to the following equation, instead of unadjusted basic allowances listed in Table 2 Column F:

$$\text{Unit's Unadjusted Basic Allowances} = \text{Baseline} \times 1.2 / 2000 \ (\text{Year } 2010)$$

(3) *Adjustment of basic allowances.* The Administrator will adjust each unit's unadjusted basic allowances as listed in Table 2 Column F, Table 3 Column F, and Table 4 Column F, and as stated in paragraphs (a) and (b) of this section, as follows:

$$\text{Unit's Adjusted Basic Allowances (Year 2010)} = \text{Unit's Unadjusted Basic Allowances (Year 2010)} \times \frac{8{,}900{,}000}{\text{Sum of All Unit's Unadjusted Basic Allowances (Year 2010)}}$$

(4) *Repowering adjustment.* The Administrator will calculate a repowering deduction according to the following equation:

$$\text{Repowering Deduction} = \text{Annual Set Aside} \times \frac{\text{Unit's Adjusted Basic Allowances (Year 2010)}}{8{,}900{,}000}$$

where:

Set Aside=Sum of all repowering allowances for the year 2000 under 40 CFR § 73.21

Annual Set Aside=Set Aside/10

(5) *Special allowance reserve deduction.* The Administrator will calculate a Special Allowance Deduction according to the following equation:

$$\text{Special Allowance Deduction} = 250{,}000 \times \frac{\text{Unit's Adjusted Basic Allowances (Year 2010)}}{8{,}900{,}000}$$

(6) *Conservation and renewable energy reserve.* The Administrator will calculate the Conservation Deduction according to the following equation:

$$\text{Conservation Deduction} = 30{,}000 \times \frac{\text{Unit's Adjusted Basic Allowances (Year 2010)}}{8{,}900{,}000}$$

(7) *Final allowance allocations.* (i) (A) According to paragraphs (b) (1) through (6) of this section, the Administrator will revise the allowances allocated to each unit listed in Table 2 of § 73.10 and will allocate to each unit's subaccount representing calendar years 2010 and each year thereafter according to the following equation:

$$\text{Unit's Final Revised Phase II Allowances (Year 2010)} = \text{Unit's Adjusted Basic Allowances (Year 2010)} + \text{Number for Unit in Table 2 Column C} - \text{Special Allowance Deduction}$$

(B) According to paragraphs (b) (1) through (6) of this section, the Administrator will revise the allowances allocated to each unit listed in Table 3 of § 73.10 and will allocate to each unit's subaccount representing calendar years 2010 and each year thereafter according to the following equation:

$$\text{Unit's Final Revised Phase II Allowances (Year 2010)} = \text{Unit's Adjusted Basic Allowances (Year 2010)} + \text{Number for Unit in Table 3 Column C} - \text{Special Allowance Deduction}$$

(ii)(A) If, as of January 1, 1998, both the auction and sales under subpart E of this part are terminated as provided for in subpart E, instead of allowances under paragraph (b)(7)(i) of this section, the Administrator will revise the allowances allocated to each unit listed in Table 2 of § 73.10 and will allocate to unit's subaccount representing calendar years 2010 and each year thereafter according to the following equation:

$$\text{Unit's Final Revised Phase II Allowances (Year 2010)} = \text{Unit's Adjusted Basic Allowances (Year 2010)} + \text{Number for Unit in Table 2 Column C}$$

(B) If, as of January 1, 1998, both the auction and sales under subpart E of this part are terminated as provided for in subpart E, instead of allowances under paragraph (b)(7)(i) of this section, the Administrator will revise the allowances allocated to each unit listed in Table 3 of § 73.10 and will allocate to each unit's subaccount representing calendar years 2010 and each year thereafter according to the following equation:

$$\text{Unit's Final Revised Phase II Allowances (Year 2010)} = \text{Unit's Adjusted Basic Allowances (Year 2010)} + \text{Number for Unit in Table 3 Column C}$$

(C) If, as of January 1, 1998, both the auction and sales under subpart E of this part are terminated as provided for in subpart E, instead of allowances under paragraph (a)(7)(i) of this section, the Administrator will revise the allowances allocated to each unit listed in Table 4 of § 73.10 (and not eligible for allocations under Table 2) and will allocate to each unit's subaccount representing calendar years 2010 and thereafter according the following equation:

$$\text{Unit's Final Revised Phase II Allowances (Year 2010)} = \text{Unit's Adjusted Basic Allowances (Year 2010)} + \text{Number for Unit in Table 4 Column C}$$

§ 73.12 Rounding procedures.

(a) *Calculation rounding.* All allowances under this part and part 72 of this chapter shall be allocated as whole allowances. All calculations for such allowances shall be rounded down for decimals less than 0.500 and up for decimals of 0.500 or greater.

(b) *Achieving exact allowance reserves and allowance totals.* (1) If the sum of adjusted basic allowances exceeds 8,900,000; the sum of the deductions for the repowering annual set aside is less than the annual set aside; the sum of the deductions for the Energy Conservation and Renewable Energy Reserve is less than 30,000 allowances per year; or the sum of the deductions for the special allowance reserve is less than 250,000, then the Administrator will withdraw one allowance from each unit, beginning with the unit receiving the largest number of allowances, in descending order, until the allocated allowances balance with the number of allowances available.

(2) If the sum of adjusted basic allowances is less than 8,900,000; the sum of the deductions for the repowering annual set aside exceeds the annual set aside; the sum of the deductions for the Energy Conservation and Renewable Energy Reserve exceeds 30,000 allowances per year; or the sum of the deductions for the special allowance reserve exceeds 250,000, then the Administrator will distribute one allowance for each unit, beginning with the unit receiving the largest number of allowances, in descending order, until the allocated allowances balance with the number of allowances required.

§ 73.13 Procedures for submittals.

(a) *Address for submittal.* All submittals under this subpart shall be made by the designated representative to the Director, Acid Rain Division, (6204J), 401 M Street, SW., Washington, DC 20460 and shall meet the requirements specified in 40 CFR 72.21.

(b) *Appeals procedures.* The designated representative may appeal the decision as to eligibility or allocation of allowances under §§ 73.16, 73.18, 73.19, and 73.20, using the appeals procedures of part 78 of this chapter.

§ 73.16 Phase I early reduction credits.

(a) *Unit eligibility.* Units listed in Table 1 of § 73.10 are eligible to receive allowance allocations under this section if:

(1) The unit is authorized by the Governor of the State in which the unit is located to make reductions in emissions of sulfur dioxide prior to calendar year 1995; and

(2) The unit is part of a utility system (which, for the purposes of this section only, includes all electrical generators operated by a utility, including those that are not fossil fuel-fired) that has decreased its total coal-fired generation, as a percentage of total system generation, by more than twenty percent between January 1, 1980 and December 31, 1985; and

(3) The unit is part of a utility system that during calendar years 1985 through 1987 had a weighted capacity factor for all coal-fired units in the system of less than fifty percent. The weighted capacity factor is equal to:

$$\text{Weighted Capacity Factor} = \frac{\text{Sum of actual generation of all coal-fired units in the utility system}}{\text{Sum of all coal generators' nameplate capacity} \times 8760}$$

(b) *Emissions reductions eligibility.* Sulfur dioxide emissions reductions eligible for allowance allocations shall:

(1) Be made no earlier than calendar year 1991 and no later than calendar year 1994; and

(2) Be due to physical changes to the plant or be a result of a change in the method of operating the plant including but not limited to changing the type or quality of fuel being burned.

(c) *Initial certification of eligibility.* The designated representative for a unit listed in Table 1 of § 73.10 that seeks allowances under this section shall apply for certification of unit eligibility prior to or accompanying a request for allowances under paragraph (d) of this section. A completed application for this certification shall be submitted according to the requirements of § 73.13 of this part and shall include the following:

(1) A letter from the Governor of the State in which the unit is located authorizing the unit to make reductions in emissions of sulfur dioxide prior to calendar year 1995;

(2) A report listing all units in the utility system, each fossil fuel-fired unit's fuel consumption and fuel heat content for calendar year 1980, and each generator's total electrical generation for calendar years 1980 and 1985 (including all generators whether fossil fuel-fired, nuclear, hydroelectric, or other.)

(d) *Request for allowances.* (1) The designated representative for the requesting unit shall submit the request for allowances according to the procedures in § 73.13 and shall include the following information:

(i) The calendar year for which credits for reductions are requested and the actual SO_2 emissions and fuel consumption in that year. For units that have not installed and received certification of their SO_2 continuous emission monitoring system prior to the calendar year(s) for which credits for reductions are requested, the designated representative shall submit photocopies of the units' Form EIA-767 for the calendar year of the requested reductions in emissions; and

(ii) A letter signed by the designated representative: (A) Stating and documenting the specific physical changes to the plant or changes in the method of operating the plant (including but not limited to changing the type or quality of fuel being burned) which resulted in the reduction of emissions; and

(B) Certifying that all photocopies are exact duplicates.

(2) The designated representative shall submit any request for allowances for years prior to 1993 no later than May 1, 1993. The designated representative shall submit any request for allowances for 1993 no later than May 1, 1994. For 1994 and after, the designated representative shall submit any request for allowances no later than March 1 of the calendar year following the year in which the reductions were made.

(e) *Allowance allocation.* The Administrator will allocate allowances to the eligible unit upon satisfactory submittal of information under paragraphs (c) and (d) of this section in the amount calculated by the following equations. Such allowances will be allocated to the eligible unit's 1995 future year subaccount. The following provisions shall apply to the allocation:

(1) "Prior year" means a single calendar year selected by the eligible unit from 1991 to 1994 inclusive.

(2) One "credit" equals one ton of eligible SO_2 emissions reductions.

(3) "ERC units" are units eligible for early reduction credits, and "non-ERC units" are fossil fuel-fired units that are part of the same utility system but are not eligible for early reduction credits.

(4) Calendar year 1990 data will be used as the basis against which early reduction credits are determined.

(5) Early reduction credits will be calculated at the unit level, subject to

the restrictions in paragraph (e)(6) of this section.

(6) The number of credits for eligible Phase I units will be calculated as follows:

(i) *Comparison of the prior year utilization of ERC units to the 1990 utilization, as a percentage of system utilization.* If, as calculated below, system-wide prior year utilization of ERC units exceeds systems-wide 1990 utilization of ERC units on a percentage basis, then paragraphs (e)(6)(ii) and (iii) of this section apply. If not, the ERC units are eligible to receive early reduction credits as calculated in paragraph (e)(6)(v)(A) of this section.

$$\text{Prior year utilization} = \frac{\sum_{\text{ERC units}} \text{Heat input}_{\text{prior year}} \ (\text{in mmBtu})}{\sum_{\text{all system units}} \text{Heat input}_{\text{prior year}} \ (\text{in mmBtu})}$$

$$\textbf{1990}\ \text{utilization} = \frac{\sum_{\text{ERC units}} \text{Heat input}_{1990} \ (\text{in mmBtu})}{\sum_{\text{all system units}} \text{Heat input}_{1990} \ (\text{in mmBtu})}$$

(ii) *Comparison of the prior year average emission rate of all ERC units to the prior year average emission rate of all non-ERC units.* If, as calculated below, the system-wide average SO_2 emission rate of ERC units exceeds that of non-ERC units, then a unit's prior year utilization will be restricted in accordance with paragraph (e)(6)(iv) of this section. If not, then paragraph (e)(6)(iii) of this section applies.

$$\text{ERC unit prior year emissions rate} = \frac{\sum_{\text{ERC units}} SO_2\ \text{emissions}_{\text{prior year}} \ (\text{in pounds})}{\sum_{\text{ERC units}} \text{Heat input}_{\text{prior year}} \ (\text{in mmBtu})}$$

$$\text{Non-ERC unit prior year emissions rate} = \frac{\sum_{\text{non-ERC units}} SO_2\ \text{emissions}_{\text{prior year}} \ (\text{in pounds})}{\sum_{\text{non-ERC units}} \text{Heat input}_{\text{prior year}} \ (\text{in mmBtu})}$$

(iii) *Comparison of the emission rate of the non-ERC units in the prior year to the emission rate of the non-ERC units in 1990.* If, as calculated in paragraph (ii) of this section, the prior year system average non-ERC SO_2 emission rate increases above the 1990 system average non-ERC SO_2 emission rate, as calculated below, then a unit's prior year utilization will be restricted in accordance with paragraph (e)(6)(iv) of this section. If not, the ERC units are eligible to receive early reduction credits as calculated in paragraph (e)(6)(v)(A) of this section.

$$\text{Non-ERC unit 1990 emission rate} = \frac{\sum_{\text{non-ERC units}} SO_2\ \text{emissions}_{1990} \ (\text{in pounds})}{\sum_{\text{non-ERC units}} \text{Heat input}_{1990} \ (\text{in mmBtu})}$$

(iv) *Calculation of the utilization limit for restricted units.* The limit on utilization for each unit eligible for early reduction credits subject to paragraphs (e)(6) (ii) and (iii) of this section will be calculated as follows:

$$\text{ERC unit's Heat input}_{\text{prior year}} \ (\text{in mmBtu}) \times \frac{\left(\dfrac{\sum_{\text{ERC units}} \text{Heat input}_{1990} \ (\text{in mmBtu})}{\sum_{\text{all units}} \text{Heat input}_{1990} \ (\text{in mmBtu})}\right)}{\left(\dfrac{\sum_{\text{ERC units}} \text{Heat input}_{\text{prior year}} \ (\text{in mmBtu})}{\sum_{\text{all units}} \text{Heat input}_{\text{prior year}} \ (\text{in mmBtu})}\right)}$$

This result, expressed in million Btus, is the restricted utilization of the ERC unit to be used in the calculation of early reduction credits in paragraph (e)(6)(v)(B) of this section.

(v)(A) *Calculation of the unit's early reduction credits where the unit's prior year utilization is not restricted.*

$$\frac{\left(\begin{array}{c}\text{ERC unit's} \\ SO_2 \text{ emission rate}_{1990} \\ (\text{in lb/mmBtu})\end{array} - \begin{array}{c}\text{ERC unit's} \\ SO_2 \text{ emission rate}_{\text{prior year}} \\ (\text{in lb/mmBtu})\end{array}\right) \times \begin{array}{c}\text{heat input}_{\text{prior year}} \\ (\text{in mmBtu})\end{array}}{2000}$$

(B) *Calculation of the unit's early reduction credits where the unit's prior year utilization is restricted.*

$$\frac{\left(\begin{array}{c}\text{ERC unit's} \\ SO_2 \text{ emission rate}_{1990} \\ (\text{in lb/mmBtu})\end{array} - \begin{array}{c}\text{ERC unit's} \\ SO_2 \text{ emission rate}_{\text{prior year}} \\ (\text{in lb/mmBtu})\end{array}\right) \times \begin{array}{c}\text{restricted heat input from (iv)} \\ (\text{in mmBtu})\end{array}}{2000}$$

(vi) The Administrator will allocate to the ERC unit allowances equal to the lesser of the calculated number of credits in paragraphs (e)(6)(v)(A) or (v)(B) of this section and the following limitation:

$$\frac{\left(\begin{array}{c}\text{ERC unit's actual} \\ SO_2 \text{ emission rate}_{1985} \\ (\text{in lb/mmBtu})\end{array} \times \text{baseline (in mmBtu)}\right)}{2000} - \begin{array}{c}\text{Allowances} \\ \text{from Table A of the Act} \\ (\text{in tons})\end{array}$$

§ 73.18 Submittal procedures for units commencing commercial operation during the period from January 1, 1993 through December 31, 1995.

(a) *Eligibility.* To be eligible for allowances under this section, a unit shall commence commercial operation between January 1, 1993 and December 31, 1995 and have commenced construction before December 31, 1990.

(b) *Application for allowances.* No later than December 31, 1995, the designated representative for a unit expected to be eligible under this provision must submit a photocopy of a signed contract for the construction of the unit.

(c) *Commencement of commercial operation.* The Administrator will use EIA information submitted by the utility for the boiler on-line date as commencement of commercial operation.

§ 73.19 Certain units with declining SO_2 rates.

(a) *Eligibility.* A unit is eligible for allowance allocations under this section if it meets the following requirements:

(1) It is an existing unit that is a utility unit;

(2) It serves a generator with nameplate capacity equal to or greater than 75 MWe;

(3) Its 1985 actual SO_2 emissions rate was equal to or greater than 1.2 lb/mmBtu;

(4) Its 1990 actual SO_2 emissions rate is at least 50 percent less than the lesser of its 1980 actual or allowable SO_2 emissions rate;

(5) Its 1997 actual SO_2 emission rate is less than 1.2 lb/mmBtu;

(6) It commenced commercial operation after January 1, 1970;

(7) It is part of a utility system whose combined commercial and industrial kilowatt-hour sales increased more than 20 percent between calendar years 1980 and 1990; and

(8) It is part of a utility system whose company-wide fossil-fuel SO_2 emissions rate declined 40 percent or more from 1980 to 1988.

(b) *Submittal Procedures.* Not later than March 1, 1998, in order to be

eligible for allowance allocations under this section, the designated representative for the unit must submit a photocopy of the unit's 1997 Form EIA-767 and a letter certifying that the photocopy is a true copy.

§ 73.20 Phase II early reduction credits.

(a) *Unit eligibility.* Units listed in Tables 2 or 3 of § 73.10 are eligible for allowances under this section if:

(1) The unit is not a unit subject to emissions limitation requirements of Phase I and is not a substitution unit (under 40 CFR 72.41) or a compensating unit (under 40 CFR 72.43);

(2) The unit is authorized by the Governor of the State in which the unit is located;

(3) The unit is part of a utility system (which, for the purposes of this section only, includes all generators operated by a single utility, including generators that are not fossil fuel-fired) that has decreased its total coal-fired generation, as a percentage of total system generation, by more than twenty percent between January 1, 1980 and December 31, 1985; and

(4) The unit is part of a utility system that during calendar years 1985 through 1987 had a weighted capacity factor for all coal-fired units in the system of less than fifty percent. The weighted capacity factor is equal to:

$$\text{Weighted Capacity Factor} = \frac{\text{Sum of actual generation of all coal-fired units in the utility system}}{\text{Sum of all coal generators' nameplate capacity} \times 8760}$$

(b) *Emissions reductions eligibility.* Sulfur dioxide emissions reductions eligible for allowance credits at units eligible under paragraph (a) of this section must meet the following requirements:

(1) Be made no earlier than calendar year 1995 and no later than calendar year 1999; and

(2) Be due to physical changes to the plant or are a result of a change in the method of operating the plant including but not limited to changing the type or quality of fuel being burned.

(c) *Initial certification of eligibility.* The designated representative of a unit that seeks allowances under this section shall apply for certification of unit eligibility prior to or accompanying a request for allowances under paragraph (d) of this section. A completed application for this certification shall be submitted according to § 73.13 and shall include the following:

(1) A letter from the Governor of the State in which the unit is located authorizing the unit to make reductions in sulfur dioxide emissions; and

(2) A report listing all units in the utility system, each fossil fuel-fired unit's fuel consumption and fuel heat content for calendar year 1980, and each generator's total electrical generation for calendar years 1980 and 1985 (including all generators, whether fossil fuel-fired, nuclear, hydroelectric or other).

(d) *Request for allowances.* (1) The designated representative of the requesting unit shall submit the request for allowances according to the procedures of § 73.13 and shall include the following information:

(i) The calendar year for which credits for reductions are requested and the actual SO_2 emissions and fuel consumption in that year;

(ii) A letter signed by the designated representative stating and documenting the specific physical changes to the plant or changes in the method of operating the plant (including but not limited to changing the type or quality of fuel being burned) which resulted in the reduction of emissions; and

(iii) A letter signed by the designated representative certifying that all photocopies are exact copies.

(2) The designated representative shall submit each request for allowances no later than March 1 of the calendar year following the year in which the reductions were made.

(e) *Allowance allocation.* The Administrator will allocate allowances to the eligible unit upon satisfactory submittal of information under paragraphs (c) and (d) of this section in the amount calculated by the following equations. Such allowances will be allocated to the unit's 2000 future year subaccount.

(1) "Prior year" means a single calendar year selected by the eligible unit from 1995 to 1999 inclusive.

(2) One "credit" equals one ton of eligible SO_2 emissions reductions.

(3) "ERC units" are units eligible for early reduction credits, and "non-ERC units" are fossil fuel-fired units that are part of the same operating system but are not eligible for early reduction credits.

(4) Calendar year 1990 data will be used as the basis against which early reduction credits are determined.

(5) Early reduction credits will be calculated at the unit level, subject to the restrictions in paragraph (e)(6) of this section.

(6) The number of credits for eligible Phase II units will be calculated as follows:

(i) *Comparison of the prior year utilization of ERC units to the 1990 utilization, as a percentage of system utilization.* If, as calculated below, system-wide prior year utilization of ERC units exceeds systems-wide 1990 utilization of ERC units on a percentage basis, then paragraphs (e)(6)(ii) and (iii) of this section apply. If not, the ERC units are eligible to receive early reduction credits as calculated in paragraph (e)(6)(v)(A) of this section.

$$\text{Prior year utilization} = \frac{\sum_{\text{ERC units}} \text{Heat input}_{\text{prior year}} \ (\text{in mmBtu})}{\sum_{\text{all system units}} \text{Heat input}_{\text{prior year}} \ (\text{in mmBtu})}$$

$$1990\ utilization = \frac{\sum_{ERC\ units} Heat\ input_{1990}\ (in\ mmBtu)}{\sum_{all\ system\ units} Heat\ input_{1990}\ (in\ mmBtu)}$$

(ii) *Comparison of the prior year average emission rate of all ERC units to the prior year average emission rate of all non-ERC units.* If, as calculated below, the system-wide average SO_2 emission rate of ERC units exceeds that of non-ERC units, then a unit's prior year utilization will be restricted in accordance with paragraph (e)(6)(iv) of this section. If not, then paragraph (iii) of this section applies.

$$\begin{matrix} ERC\ unit\ prior\ year \\ emissions\ rate \end{matrix} = \frac{\sum_{ERC\ units} SO_2\ emissions_{prior\ year}\ (in\ pounds)}{\sum_{ERC\ units} Heat\ input_{prior\ year}\ (in\ mmBtu)}$$

$$\begin{matrix} Non\text{-}ERC\ unit\ prior\ year \\ emissions\ rate \end{matrix} = \frac{\sum_{non\text{-}ERC\ units} SO_2\ emissions_{prior\ year}\ (in\ pounds)}{\sum_{non\text{-}ERC\ units} Heat\ input_{prior\ year}\ (in\ mmBtu)}$$

(iii) *Comparison of the emission rate of the non-ERC units in the prior year to the emission rate of the non-ERC units in 1990.* If, as calculated in paragraph (ii) of this section, the prior year system average non-ERC SO_2 emission rate increases above the 1990 system average non-ERC SO_2 emission rate, as calculated below, then a unit's prior year utilization will be restricted in accordance with paragraph (e)(6)(iv) of this section. If not, the ERC units are eligible to receive early reduction credits as calculated in paragraph (e)(6)(v)(A) of this section.

$$\begin{matrix} Non\text{-}ERC\ unit\ 1990 \\ emission\ rate \end{matrix} = \frac{\sum_{non\text{-}ERC\ units} SO_2\ emissions_{1990}\ (in\ pounds)}{\sum_{non\text{-}ERC\ units} Heat\ input_{1990}\ (in\ mmBtu)}$$

(iv) *Calculation of the utilization limit for restricted units.* The limit on utilization for each unit eligible for early reduction credits subject to paragraphs (e)(6) (ii) and (iii) of this section will be calculated as follows:

$$ERC\ unit's\ Heat\ input_{prior\ year}\ (in\ mmBtu)\ x \left(\frac{\left(\frac{\sum_{ERC\ units} Heat\ input_{1990}\ (in\ mmBtu)}{\sum_{all\ units} Heat\ input_{1990}\ (in\ mmBtu)} \right)}{\left(\frac{\sum_{ERC\ units} Heat\ input_{prior\ year}\ (in\ mmBtu)}{\sum_{all\ units} Heat\ input_{prior\ year}\ (in\ mmBtu)} \right)} \right)$$

This result, expressed in million Btus, is the restricted utilization of the ERC unit to be used in the calculation of early reduction credits in paragraph (e)(6)(v)(B) of this section.

(v)(A) *Calculation of the unit's early reduction credits where the unit's prior year utilization is not restricted.*

$$\frac{\left(\begin{array}{c}\text{ERC unit's}\\ SO_2\text{ emission rate}_{1990}\\ \text{(in lb/mmBtu)}\end{array} - \begin{array}{c}\text{ERC unit's}\\ SO_2\text{ emission rate}_{prior\ year}\\ \text{(in lb/mmBtu)}\end{array}\right) \times \begin{array}{c}\text{heat input}_{prior\ year}\\ \text{(in mmBtu)}\end{array}}{2000}$$

(B) *Calculation of the unit's early reduction credits where the unit's prior year utilization is restricted.*

$$\frac{\left(\begin{array}{c}\text{ERC unit's}\\ SO_2\text{ emission rate}_{1990}\\ \text{(in lb/mmBtu)}\end{array} - \begin{array}{c}\text{ERC unit's}\\ SO_2\text{ emission rate}_{prior\ year}\\ \text{(in lb/mmBtu)}\end{array}\right) \times \begin{array}{c}\text{restricted heat input from (iv)}\\ \text{(in mmBtu)}\end{array}}{2000}$$

(vi) The Administrator will allocate to the ERC unit allowances equal to the lesser of the calculated number of credits in paragraphs (e)(6)(v) (A) or (B) of this section and the following limitation:

$$\frac{\text{ERC unit's heat input}_{prior\ year} \times \text{the lesser of} \left[\begin{array}{c}2.5\\ \text{or}\\ \text{the most stringent SIP}\\ \text{emissions limit}\\ \text{(in lb/mmBtu)}\end{array}\right]}{2000} - \begin{array}{c}\text{ERC unit's}\\ SO_2\text{ emissions}_{prior\ year}\\ \text{(in tons)}\end{array}$$

§ 73.21 Phase II repowering allowances.

(a) *Repowering allowances.* In addition to allowances allocated under § 73.11, the Administrator will allocate, to each existing unit (under § 72.44(b)(1) of this chapter) with an approved repowering extension plan, allowances for use during the repowering extension period approved under § 72.44(f)(2)(ii) of this chapter (including a prorated allocation for any fraction of a year) equal to:

$$\begin{array}{c}\text{Unit's Repowering}\\ \text{Allowances}\end{array} = \frac{\text{Unit's Baseline} \times \text{the lesser of} \left[\begin{array}{c}\text{1995 SIP}\\ \text{or}\\ \text{1995 Actual Rate}\end{array}\right]}{2000} - \text{Unit's Adjusted Basic Allowances}$$

Where:

1995 SIP=Most stringent federally enforceable state implementation plan SO_2 emissions limitation for 1995.

1995 Actual Rate=1995 actual SO_2 emissions rate

Unit's Adjusted Basic Allowances=Unit's Year 2000 Adjusted Basic Allowances as calculated at § 73.11(a)(3)

(b) Upon commencement of commercial operation of a new unit (under § 72.44(b)(2) of this chapter) with an approved repowering extension plan, allowances for use during the repowering extension period approved will end and allocations under § 73.11(a) and (b) for the existing unit will be transferred to the subaccounts for the new unit.

(c) (1) If the designated representative for a repowering unit terminates the repowering extension plan in accordance with § 72.44(g)(1) of this chapter, the repowering allowances allocated to that unit by paragraph (a) of this section will be terminated and any necessary allowances from that unit's account forfeited, calculated in the following manner:

$$\begin{array}{c}\text{Forfeited Repowering}\\ \text{Allowances}\end{array} = \text{Forfeiture Period} \times \left[\frac{\text{Unit's Baseline} \times \text{the lesser of} \left[\begin{array}{c}\text{1995 SIP}\\ \text{or}\\ \text{1995 Actual Rate}\end{array}\right]}{2000} - \begin{array}{c}\text{Unit's Adjusted}\\ \text{Basic Allowances}\end{array}\right]$$

Where:

Forfeiture Period=difference (as a portion of a year) between the end of the approved repowering extension and the end of the repowering extension under § 72.44(g)(1)(ii)

1995 SIP=Most stringent federally enforceable state implementation plan SO_2 emissions limitation for 1995.

1995 Actual Rate=1995 actual SO_2 emissions rate

Unit's Adjusted Basic Allowances=Unit's Year 2000 Adjusted Basic Allowances as calculated at § 73.11(a)(3)

(2) The Administrator will reallocate the allowances forfeited in paragraph (b)(1) of this section to all Table 2 and 3 units' years 2000 through 2009 subaccounts in the following manner:

$$Reallocation = \frac{Forfeited\ Repowering\ Allowances}{10} \times \frac{Unit's\ Repowering\ Deduction}{Sum\ of\ All\ Table\ 2\ and\ 3\ Units'\ Repowering\ Deductions}$$

§ 73.26 Conservation and renewable energy reserve.

The Administrator will allocate 300,000 allowances to the Conservation and Renewable Energy Reserve subaccount of the Acid Rain Data System. Allowances from this Reserve will be allocated to units under subpart F of this part. Termination of this Reserve and reallocation of allowances will be made under § 73.80(c).

§ 73.27 Special allowance reserve.

(a) * * *

(2) The Administrator will allocate 200,000 allowances annually for calendar years 2000 and each year thereafter to the Auction Subaccount of the Special Allowance Reserve.

(3) The Administrator will allocate 50,000 allowances annually for calendar years 2000 and each year thereafter to the Direct Sale Subaccount of the Special Allowance Reserve.

(b) * * *

(2) Until June 1, 1998, monetary proceeds from the auctions and sales of allowances from the Special Allowance Reserve (under subpart E of this part) for use in calendar years 2000 through 2009 will be distributed to the designated representative of each unit listed in Table 2 or 3 according to the following equations:

$$Unit\ Proceeds = \left[\frac{Table\ 2\ Column\ B}{250000}\right] \times Total\ Proceeds$$

$$Unit\ Proceeds = \left[\frac{Table\ 3\ Column\ B}{250000}\right] \times Total\ Proceeds$$

(3) On or after June 1, 1998, monetary proceeds from the auctions and sales of allowances from the Special Allowance Reserve (under subpart E of this part) for use in calendar years 2000 through 2009 will be distributed to the designated representative of each unit listed in Table 2 or 3 according to the following equation:

$$Unit\ Proceeds = \left[\frac{Unit's\ Special\ Allowance\ Deduction\ under\ \S 73.11(a)(5)}{250000}\right] \times Total\ Proceeds$$

(4) Until June 1, 1998, monetary proceeds from the auctions and sales of allowances from the Special Allowance Reserve (under subpart E of this part) for use in calendar years 2010 and thereafter will be distributed to the designated representative of each unit listed in Table 2 or 3 according to the following equations:

$$Unit\ Proceeds = \left[\frac{Table\ 2\ Column\ G}{250000}\right] \times Total\ Proceeds$$

$$Unit\ Proceeds = \left[\frac{Table\ 3\ Column\ G}{250000}\right] \times Total\ Proceeds$$

(5) On or after June 1, 1998, monetary proceeds from the auctions and sales of allowances from the Special Allowance Reserve (under subpart E of this part) for use in calendar years 2010 and thereafter will be distributed to the designated representative of each unit listed in Table 2 or 3 according to the following equation:

$$\text{Unit Proceeds} = \left[\frac{\text{Unit's Special Allowance Deduction under §73.11(b)(5)}}{250000}\right] \times \text{Total Proceeds}$$

(c) * * *

(2) Until June 1, 1998, allowances, for use in calendar years 2000 through 2009, remaining in the Special Allowance Reserve at the end of each year, following that year's auction and sale (under subpart E of this part) will be reallocated to the unit's Allowance Tracking System Account according to the following equations:

$$\text{Unit Allowances} = \left[\frac{\text{Table 2 Column B}}{250000}\right] \times \text{Allowances Remaining}$$

$$\text{Unit Allowances} = \left[\frac{\text{Table 3 Column B}}{250000}\right] \times \text{Allowances Remaining}$$

(3) On or after June 1, 1998, allowances, for use in calendar years 2000 through 2009, remaining in the Special Allowance Reserve at the end of each year, following that year's auction and sale (under subpart E of this part) will be reallocated to the unit's Allowance Tracking System Account according to the following equation:

$$\text{Unit Allowances} = \left[\frac{\text{Unit's Special Allowance Deduction under §73.11(a)(5)}}{250000}\right] \times \text{Allowances Remaining}$$

(4) Until June 1, 1998, allowances, for use in calendar years 2010 and thereafter, remaining in the Special Allowance Reserve at the end of each year following that year's auction and sale (under subpart E of this part) will be reallocated to the unit's Allowance Tracking System Account according to the following equations:

$$\text{Unit Allowances} = \left[\frac{\text{Table 2 Column G}}{250000}\right] \times \text{Allowances Remaining}$$

$$\text{Unit Allowances} = \left[\frac{\text{Table 3 Column G}}{250000}\right] \times \text{Allowances Remaining}$$

(5) On or after June 1, 1998, allowances, for use in calendar years 2010 and thereafter, remaining in the Special Allowance Reserve at the end of each year, following that year's auction and sale (under subpart E of this part) will be reallocated to the unit's Allowance Tracking System Account according to the following equation:

$$\text{Unit Allowances} = \left[\frac{\text{Unit's Special Allowance Deduction under §73.11(b)(5)}}{250000}\right] \times \text{Allowances Remaining}$$

* * * * * * *

11. Subpart G of part 73 consisting of § 73.90 is added to read as follows:

Subpart G—Small Diesel Refineries

§ 73.90 Allowance allocations for small diesel refineries.

(a) *Initial certification of eligibility.* The certifying official of a refinery that seeks allowances under this section shall apply for certification of its facility eligibility prior to or accompanying a request for allowances under paragraph (d) of this section. A completed application for certification, submitted to the address in § 72.13 of this chapter, shall include the following:

(1) Photocopies of Form EIA–810 for each month of calendar year 1990 for the refinery;

(2) Photocopies of Form EIA–810 for each month of calendar year 1990 for each refinery that is owned or controlled by the refiner which owns or controls the refinery seeking certification; and

(3) A letter certified by the certifying official that the submitted photocopies are exact duplicates of those forms filed with the Department of Energy for 1990.

(b) *Request for allowances.* (1) In addition to the application for certification, prior to, or accompanying, the request for allowances, the certifying official for the refinery shall submit an Allowance Tracking System New Account/New Authorized Account Representative Form.

(2) The request for allowances shall be submitted to the address in § 72.13 and shall include the following information:

(i) Certification that all motor fuel produced by the refinery for which allowances are claimed meets the requirements of subsection 211(i) of the Clean Air Act;

(ii) For calendar year 1993 desulfurized diesel fuel, photocopies of Form 810 for October, November and December 1993;

(iii) For calendar years 1994 through 1999, inclusive, photocopies of Form 810 for each month in the respective calendar year.

(3) For joint ventures, each eligible refinery shall submit a separate application under paragraph (b)(2) of this section. Each application must include the diesel fuel throughput applicable to the joint agreement and the requested distribution of allowances that would be allocated to the joint agreement. If the applications for refineries involved in the joint agreement are inconsistent as to the throughput of diesel fuel applicable to the joint agreement or as to the distribution of the allowances, all involved applications will be considered void for purposes of the joint agreement.

(4) The certifying official shall submit all requests for allowances by April 1 of the calendar year following the year in which the diesel fuel was desulfurized to the Director, Acid Rain Division, under the procedures set forth in § 73.13 of this part.

(c) *Allowance allocation.* The Administrator will allocate allowances to the eligible refinery upon satisfactory submittal of information under paragraphs (a) and (b) of this section in the amount calculated according to the following equations. Such allowances will be allocated to the refinery's non-unit subaccount for the calendar year in which the application is made.

(1) Allowances allocated under this section to any eligible refinery will be limited to the tons of SO_2 attributable to the desulfurization of diesel fuel at the refinery. (2) The refinery will be allocated allowances for a calendar year and, in the case of 1993, for the period October 1 through December 31, calculated according to the following equation, but not to exceed 1500 for any calendar year:

$$\text{Allowances Requested} = \frac{\begin{bmatrix}(a)\\ \text{Diesel Fuel Production}\end{bmatrix} \times \begin{bmatrix}(b)\\ (302)\end{bmatrix} \times \begin{bmatrix}(c)\\ (0.00224)\end{bmatrix} \times \begin{bmatrix}(d)\\ (2)\end{bmatrix}}{\begin{bmatrix}2000\\ (e)\end{bmatrix}}$$

Where:

a=diesel fuel in barrels for the year (or for October 1 through December 31 for 1993)

b=lbs per barrel of diesel

c=lbs of sulfur per lbs of diesel

d=lbs of SO_2 per lbs of sulfur

e=lbs per short ton

(3) If applications for a given year request, in the aggregate, more than 35,000 allowances, the Administrator will allocate allowances to each refinery in the amount equal to the lesser of 1500 or:

$$\text{Refinery Allowances} = \text{the lesser of} \begin{bmatrix}\text{Allowances Requested} \times \dfrac{\text{Total Allowances Requested}}{35{,}000}\\ \text{or}\\ 1{,}500\end{bmatrix}$$

PART 75—[AMENDED]

12. The authority citation for part 75 is revised to read as follows:

Authority: 42 U.S.C. 7651, *et seq.*

13. Section 75.2 is amended by revising paragraph (b)(2) and (3) to read as follows:

§ 75.2 Applicability.

* * * * *

(b) * * *

(2) Any unit not subject to the requirements of the Acid Rain Program due to operation of any paragraph of § 72.6(b) of this chapter; or

(3) An affected unit for which a written exemption has been issued under § 72.8 of this chapter and an

exception granted under § 75.67 of this part.

* * * * *

14. Section 75.4 is amended by revising paragraph (c) to read as follows:

§ 75.4 Compliance dates.

* * * * *

(c) In accordance with § 75.20, the owner or operator of any unit affected under any paragraph of 40 CFR 72.6(a)(3) (ii) through (vii) shall ensure that all certification tests for the required continuous emission monitoring systems and continuous opacity monitoring systems are completed on or before the later of the following dates:

(1) January 1, 1995; or

(2) Not later than 90 days after the date the unit becomes subject to the requirements of the Acid Rain Program.

* * * * *

[FR Doc. 93-6400 Filed 3-22-93; 8:45 am]

BILLING CODE 6560-50-P

federal register

Tuesday
March 23, 1993

Part IV

Environmental Protection Agency

Notice of Availability of the National Allowance Data Base; Notice

ENVIRONMENTAL PROTECTION AGENCY

[FRL-4604-6]

Notice of Availability of the National Allowance Data Base

AGENCY: Environmental Protection Agency.

ACTION: Notice of availability.

SUMMARY: The U.S. Environmental Protection Agency (EPA) is informing the public and interested parties that EPA is making available a revised version of the final National Allowance Data Base (NADB) and accompanying support documents. The Administrator of EPA is authorized to issue a final data base to support the development of acid rain program under section 402(4)(C) of the Clean Air Act (CAA).

EPA requested comment on three areas noted in the most recent notice: A categorization scheme for outage requests under section 402(4) of the CAA; the Supplemental Data File, which compiles information needed to classify eligible units for allocation purposes and calculate allowances under various provisions under sections 404 and 405, and the Adjunct Data File, which lists many non-traditional utility units that might be affected units under title IV

This notice announces final determinations on the three issues listed above, and makes some limited changes to the data contained in NADB version 2.1. These data changes are being made only in response to comments, verified by EPA, that either changes were made to the data which, based on the data in the possession of EPA at the time, were known to be incorrect or the Agency failed to make a correction requested by a commenter that was true and properly documented at the time.

The NADB, as published today, contains the final data base upon which the Agency is basing the allowance allocations promulgated concurrently with this notice, and contains the data that the Agency will rely on for permitting and other compliance decisions as they relate to the use of data for the Acid Rain Program and the implementing regulations found in 40 CFR parts 72, 73, 75, 77 and 78.

Inclusion in the NADB does not imply that a unit is or is not affected under title IV of the Act, although the data for such units will be used, at least in part, to determine whether a unit is affected.

ADDRESSES: All material supporting this notice is available for viewing and copying under Docket A-92-07 at the EPA Air Docket (LE-131), Environmental Protection Agency, 401 M Street, SW., Washington, DC 20460, room M-1500 on the first floor of Waterside Mall. Hours are 8:30 a.m. to 12 noon and 1:30 to 3:30 p.m., Monday through Friday, excluding legal holidays.

The final NADB, supporting documents, and final allowance allocations rule is available through the EPA's Office of Air Quality Planning and Standard's TTN electronic Bulletin Board free of charge. The bulletin board may be accessed through (919) 541-5742.

Copies of the revised final NADB (on diskette only) and supporting documents (hard copies available of request) may be obtained from the following sources:

U.S. Environmental Protection Agency, Acid Rain Division, 6204J, 401 M Street, SW., Washington, DC 20460, Attn: NADB.

Serving Maine, New Hampshire, Vermont, Massachusetts, Rhode Island, and Connecticut:

U.S. Environmental Protection Agency, Region 1 (APS), J.F. Kennedy Federal Bldg., room 2203, Boston, MA 02203, Attn: Ian Cohen.

Serving New York and New Jersey:

U.S. Environmental Protection Agency, Region 2 (2AWM-AP), Jacob Javitz Federal Bldg., 26 Federal Plaza, New York, NY 10278, Attn: Gerry DeGaetano.

Serving Pennsylvania, Delaware, Maryland, West Virginia, the District of Columbia, and Virginia:

U.S. Environmental Protection Agency, Region 3 (3AT11), 841 Chestnut Bldg., Philadelphia, PA 19107, Attn: James Topsale.

Serving Kentucky, North Carolina, Tennessee, South Carolina, Georgia, Alabama, Mississippi, and Florida:

U.S. Environmental Protection Agency, Region 4, 345 Courtland Street, NE., Atlanta, GA 30365, Attn: Kevin Taylor.

Serving Michigan, Wisconsin, Minnesota, Ohio, Indiana, and Illinois:

U.S. Environmental Protection Agency, Region 5 (5-AE-17J), 77 West Jackson Blvd., Chicago, IL 60604, Attn: David Schulz.

Serving Arkansas, Oklahoma, Louisiana, Texas, and New Mexico:

U.S. Environmental Protection Agency, Region 6 (6T-AN), First Interstate Bank Tower, 1445 Ross Avenue, suite 1200, Dallas, TX 75202-2733, Attn: Joe Winkler.

Serving Iowa, Nebraska, Missouri, and Kansas:

U.S. Environmental Protection Agency, Region 7, 726 Minnesota Avenue, Kansas City, KS 66101, Attn: Jon Knodel.

Serving North Dakota, South Dakota, Montana, Wyoming, Colorado, and Utah:

U.S. Environmental Protection Agency, Region 8, 999 18th Street, suite 500, Denver, CO 80202-2405, Attn: Mark Komp.

Serving Nevada, California, and Arizona:

U.S. Environmental Protection Agency, Region 9 (A-2-3), 75 Hawthorne Street, San Francisco, CA 94105, Attn: Michael Stenburg.

Serving Idaho, Washington, and Oregon:

U.S. Environmental Protection Agency, Region 10 (AT082), 1200 Sixth Avenue, Seattle, WA 98101, Attn: David Bray.

For their members:

American Public Power Association, 2301 M Street, NW., 3rd floor, Washington, DC 20037, Attn: Larry Mansueti.

Edison Electric Institute, 701 Pennsylvania Avenue, NW., 5th floor, Washington, DC 20004, Attn: John Kinsman.

National Coal Association, 1130 17th Street, NW., Washington, DC 20036, Attn: Jerry Karaganis.

National Rural Electric Cooperatives Association, 1800 Massachusetts Avenue, NW., Washington, DC 20036, Attn: Rae Cronmiller, Environmental Counsel.

State and Territorial Air Pollution Program Administrators/Association of Local Air Pollution Control Officials (STAPPA/ALAPCO), 444 North Capitol Street, NW., Washington, DC 20001, Attn: William Becker.

Utility Air Regulatory Group, 2000 Pennsylvania Avenue, NW., suite 9000, Washington, DC 20036, Attn: Lynn Johnson.

FOR FURTHER INFORMATION CONTACT: Craig Hillock, Acid Rain Division (202) 223-9105. The mailing address is U. S. EPA, Acid Rain Division (6204J), 401 M Street, SW., Washington, DC 20460.

SUPPLEMENTARY INFORMATION:

I. General Background

A. The Acid Rain Program

The burning of fossil fuels, particularly coal and oil, releases emissions of sulfur dioxide (SO_2) and nitrogen oxide (NO_x) into the atmosphere. Once in the air, SO_2 and NO_x may undergo various chemical reactions, resulting in transformation of the emissions into sulfates, nitrates, sulfuric acid and nitric acid. These compounds can fall to earth near the emission sources of SO_2 and NO_x or can be transported hundreds of miles. Referred to as acidic deposition or acid rain, these compounds can be in either dry or wet forms. Dry deposition includes gases, aerosols, and particles, and wet deposition is found in precipitation such as rain, fog, or snow. SO_2 and NO_x emissions and their byproducts damage ecosystems and materials, are suspected harming human health at current levels, and can reduce visibility.

Of the approximately 23 million tons of SO_2 and 19 million tons of NO_x emitted annually from all sources in the United States in 1985, about 16 million tons of SO_2 and 7 million tons of NO_x were emitted by electric utilities. Title

IV of the Act requires EPA to establish a national emissions cap of 8.95 million tons per year on electric utility SO_2 emissions and an Acid Rain Program to be implemented in two phases. Phase I (beginning in 1995) requires the 110 highest-emitting utility plants to meet an intermediate SO_2 emissions limitation. By the year 2000 (in which Phase II begins), virtually all other utility units with generator capacity greater than 25 megawatts and most new utility units will be required to meet emissions limitations as well. Total annual SO_2 emissions will be reduced by 10 million tons below 1980 levels beginning in the year 2000, a reduction of total SO_2 emissions of approximately 40%. Title IV also requires that certain coal-fired electric utility boilers reduce their emissions of NO_x through installation of low NO_x burner technologies at the same time as they are required to comply with the SO_2 limitations. However, today's rules do not address the NO_x reduction provisions of the Act and the NADB does not contain information relating to NO_x emissions.

The centerpiece of the Acid Rain Program is a unique trading system in which allowances (each authorizing the emission of up to one ton of SO_2) are bought and sold at prices determined in a free market. Existing utility sources are allocated allowances based on their historic fuel use and the emissions limitations specified in the Act. Utility units are required to limit SO_2 emissions to the number of allowances they hold, but since allowances are fully transferable, utilities may meet their emissions control requirements in the most cost-effective manner possible. For instance, a utility may decide to: (1) Switch to a lower sulfur fuel, (2) install flue gas desulfurization equipment (scrubbers) and bank unused allowances or sell them to other utilities/individuals, (3) forego emissions reductions and buy additional allowances (if necessary) or (4) implement energy efficiency measures at the plant or encourage customers to undertake them. Other options and combinations of options are possible, providing an unusually high degree of flexibility for affected sources to comply with the law.

In order to operate, each affected source must apply for a permit in which the source certifies that it will hold a sufficient number of allowances to cover its SO_2 emissions, and specifies the source's planned method of compliance. In addition, in order to ensure the achievement of the nationally mandated reductions in SO_2 and NO_X emissions, each affected source must install a system to continuously monitor its emissions and to collect, record, and report emissions data.

If an affected unit exceeds its emissions limitation for either SO_2 or NO_X, the Act requires the affected source to pay penalties and, for SO_2, to submit a plan detailing both how and when the excess SO_2 emissions will be offset. These requirements act as a strong incentive for compliance with the mandated emissions reductions of the Acid Rain Program.

B. Purpose and Development of the National Allowance Data Base

For Phase II of the program, the Act provides a number of calculations which must be used to determine an affected unit's initial allowance allocations. Section 402(4)(C) of the CAA authorizes the EPA to supplement data needed in support of the Acid Rain program and to correct factual errors. Certain data necessary for the development of the allowance allocations are also necessary for operation of the Acid Rain program as provided in the implementing regulations in 40 CFR parts 72, 73, 75, 77 and 78 (58 FR 3590).

EPA developed the NADB from a variety of sources, including the National Utility Reference File (NURF), which is a subset of the National Acid Precipitation Assessment Program (NAPAP) Report Version 2, and Energy Information Agency (EIA) forms.

EPA made available NADB version 2.0 through a **Federal Register** notice on July 19, 1991 (56 FR 33278), and requested comment from the public regarding the data contained in the database. Over 200 comment documents were received.

In response, the Agency published NADB version 2.1 on July 7, 1992 (57 FR 30034), which the Agency stated was the final version to be used in the development of Phase II allocations, with three issues left open for public comment. First, the Agency requested comment on the categorization of outage requests for baseline adjustments. The notice also announced the availability for public review of two additional data files to be used in the calculation of Phase II allowances. The first, the Supplemental Data File, contains information needed to classify units for certain allocation formulas and data necessary for certain allowance calculations. The second, the Adjunct Data File, was a listing of non-traditional utility boilers that EPA believed might be affected under title IV, but had not previously identified.

II. Response to Public Comments

A. Comments Received

In response to the July 1992 Notice of Availability, EPA received 67 comments on the National Allowance Data Base. EPA reviewed these comments, and has included responses to the comments in the docket listed under **ADDRESSES** at the front of this notice.

B. Reason for Revised Final NADB

EPA is issuing a revised version of the NADB for two reasons. First, the resolution of the three issues opened for comment in the July 1992 notice required EPA to modify the NADB and the associated data files. Second, EPA received a number of comments from interested parties stating that EPA had failed to correct data errors for which comments had been submitted in the previous comment period on the NADB, or made changes that resulted in errors based on the information previously submitted.

Thus, while it was EPA's intent to have a complete and final NADB at publication last July, EPA believes that the adjustments made today to the NADB, as discussed below, are appropriate. EPA is maintaining the policy outlined in the July notice of not accepting any *new* corrections to the NADB, including outage hour requests.

C. Corrections to NADB

Of the comments received, most included requests for data changes to the NADB version 2.1. The majority of these comments were new data change requests, however several comments pointed out data errors that were introduced during finalization of NADB. EPA determined that it would correct such data errors provided that one of the following criteria was met: (1) No request for a data change was submitted in response to NADB version 2.0, but data in NADB version 2.1 were different (in error) from data contained in NADB version 2.0, (2) a data change was requested in response to NADB version 2.0 but was not addressed by EPA, or (3) a data change was requested in response to NADB version 2.0, reviewed and accepted by EPA, but not correctly implemented in NADB version 2.1.

EPA is also revising the Phase I allowances listed in NADB version 2.1 in order to be consistent with the final Phase I allowances in the Acid Rain core regulations (40 CFR 73.10)(58 FR 3590). NADB versions 2.0 and 2.1 listed allowances for Phase I units from Table A contained in the Act. Today's release of NADB version 2.11 lists the final allowance allocation for Phase I units as promulgated under the core regulations.

EPA is not making data changes in response to the following categories of comments, all of which involve new requests: Revisions to basic methodologies for calculation of various parameters, such as heat input at 60 percent capacity factor and averaging times for emission limits; new requests for EPA to grant discontinuous outages totaling four or more months in duration; new requests for changes to the existing data or inclusion of new units into the database; and reiterations, in whole or in part, of previous requests made to change data that EPA decided in NADB version 2.1. Specific responses to such comments are contained in the docket under ADDRESSES at the front of this notice.

Several commenters requested either changes to data not previously submitted or inclusion of units not contained in NADB version 2.1. EPA is not accepting new data requests received during the NADB version 2.1 comment period in order not to delay even further the finalization of the NADB, which had a statutory deadline of December 31, 1991. EPA believes that adequate public notice and comment was provided for development and finalization of the NADB through the comment period provided on NADB version 2.0, which was equivalent to informal rulemaking and was more than what was required by the Act. However, EPA believes that it is appropriate to correct errors of omission and commission in NADB version 2.1, and a good faith effort should be made to ensure that data change requests submitted during the public comment period for NADB version 2.0 and accepted by EPA are accurately reflected in the final NADB.

Several commenters brought to EPA's attention that the baseline heat input data (NADB data field BASE8587) for units at certain plants decreased from NADB version 2.0 to NADB version 2.1 when no request to change the data had been submitted in response to NADB version 2.0. EPA determined that a computer programming error resulted in a lower total baseline for a small number of plants with a unique configuration where multiple boilers served multiple generators. EPA determined which units were affected by this error and made corrections for both the units that commented and also for the units for which no comment was received. In this case, EPA decided that all units affected by the error must be treated in an equitable and consistent manner and so the correction of the data for all the units was warranted.

Two commenters stated that the allowable emission limits (NADB data field ANNLIM85) for certain units were incorrectly calculated based on their comments on NADB version 2.0. The units in question were all planned to commence commercial operation after the enactment of title IV. The comments addressed EPA's conversion of the site emission limit to a unit-level annualized emission limit based on the total number of planned units at the plant, and, if a unit was permitted to use more than one fuel type, selecting the most stringent emission limit applicable to the fuel with the highest sulfur content. EPA determined that the requested data changes had been incorrectly implemented in NADB version 2.1, and has corrected the emission limits for these units.

EPA finalized the allowances allocated to Phase I units in Table 1 of the recently promulgated Acid Rain Core Regulations (40 CFR 73.10)(58 FR 3590). The initial Phase I allowances were originally published in Table A of title IV and incorporated into NADB version 2.1 (data field PHASE1AL). Subsequently, these initial Phase I allowances were adjusted for certain units that receive additional allowances pursuant to sections 404(a)(3) and 404(h) and then reduced by the amount specified in section 416(b) to produce the total final Phase I allowances. These figures were published in the Acid Rain core regulations. In order to ensure consistency between the final NADB published with this notice and the recently finalized Acid Rain core regulations, EPA decided to replace the initial Phase I allowances in NADB version 2.1 with the final total Phase I allowances.

Other commenters brought minor errors of omission and commission to EPA's attention which met the criteria stated above, and therefore were corrected. The details of these changes are contained in the docket.

D. Supplemental Data File

EPA proposed the Supplemental Data File (SDF) in the July 7, 1992 Notice of Availability. The SDF contains additional information required to determine which units qualify for certain special provisions of title IV and to calculate allowances for those units. EPA requested comment only on the unique data fields contained in the SDF. No revisions would be made to data fields also contained in the final NADB version 2.1. EPA received several comments on data contained in the SDF, some of which are discussed below. The comments are discussed in more detail in the docket under ADDRESSES at the front of this notice.

One commenter requested that a data change be made for the number of utility customers served in 1990 (SDF data field UCUST90). The utility in question generates and sells electricity to several utility wholesalers, who then sell the power to a much larger number of ultimate customers. EPA did not grant this request because the immediate customers of the utility, in this case the utility wholesalers, are counted as the utility customers, not the ultimate customers served by the wholesalers.

EPA received two requests to revise the date of commencement of commercial construction for certain planned units. Data are provided in the SDF to enable EPA to determine whether a planned unit is eligible for allowances under section 405(g)(4) of title IV. To be eligible for this provision, units planning to commence commercial operation on or after January 1, 1993 and no later than December 31, 1995 must have begun a continuous program of construction before December 31, 1990. The SDF data field "CONSTYR" indicates whether or not a planned unit began construction before 1991. In the July 7, 1992 proposed rules for Acid Rain Allowance Allocations and Reserves, 40 CFR part 72 (57 FR 29940) EPA proposed that, for units which are potentially eligible for this provision and have not yet provided documentation regarding construction dates, a certifying official be required to submit documentation before December 31, 1995 that construction was commenced on the unit before December 31, 1990. The documentation must be unit-specific in order for EPA to determine if the unit is eligible for allowances under section 405(g)(4). One commenter submitted adequate unit-specific data to support its requested data change. The other commenter submitted documentation that construction had commenced on the overall generation facility before 1991, but did not provide unit-specific information. Again, EPA encourages units that are potentially eligible for section 405(g)(4) to submit the appropriate information required by 40 CFR 73.18 by the December 31, 1995 deadline.

One commenter agreed that the data contained in the SDF correctly classified units operated by the commenter for the purposes of allowance calculations, but that if EPA were to use the SDF in the future for any purpose other than for allowance calculations, that EPA should re-promulgate the SDF for review and comment. EPA does not plan to use the SDF for any other purpose but is leaving

open the possibility that it may be appropriate to do so in the future.

E. Outage Hours

1. Background

Section 402(4)(A) of the Act provides the Administrator with discretion to adjust baseline calculations for units shutdown for a continuous period of four months or more and for units that experienced accidents which caused prolonged outages. In its development of the proposed rule, EPA considered the importance of consistency in adjusting baselines for all affected units and developed categories to clearly define circumstances in which the Administrator would allow or disallow such adjustments. In a July, 1992 **Federal Register** notice, EPA solicited comments on its handling of outages and its proposed categorization.

In that same **Federal Register** notice, EPA clearly stated that it would not accept new modifications to the NADB version 2.1, having previously provided for a comment period during 1991 for NADB version 2.0. Comments relating to the outage fields in the NADB were considered only if they had been submitted to EPA in the original comment period on NADB version 2.0 and were affected by the Agency's subsequent response to comments on the proposed outage classifications.

Outage adjustments to baseline calculations are made final today and are reflected in the allowance allocations promulgated in today's rule.

2. Accidents Which Caused Prolonged Outages

a. Definition of Accident. In developing clear criteria for adjustments, EPA proposed in the July, 1992 **Federal Register** notice to define accidents which caused prolonged outages. "Accidents" were interpreted to mean acts of God; that is, the occurrence of natural phenomena, such as a tornado, which cause the unit to go off-line. Specifically excluded from this definition of accidents were incidents related to the operation of the unit, such as worker error, since they were covered already by the overall definition of a forced outage.

Commenters requested that EPA reconsider the definition of accident. One commenter maintained that the definition adopted by EPA is inconsistent with the common language usage of the term accident. The alternative definition that was suggested would consider any event that was unexpected, unintentional and undesirable to qualify as an accident Such events would include natural phenomena and mechanical failures as well as worker error.

Response: In its final determinations for outages, EPA retains its definition for accident as the occurrence of a natural phenomenon or an incident unrelated to the operation of the unit that is unpreventable, unforeseeable and not caused by worker error. EPA finds little legislative history relating to the definition of accident and believes that its definition is consistent with general industry practice, which identifies accidents as distinct from other types of forced outages. For example, such a distinction is made within the North American Electric Reliability Council's (NERC) Generating Availability Data System (GADS), the source the Agency is to use, according to the Senate conference report, for assessing the type and duration of outages. The GADS system identifies forced outages caused by external catastrophes as a separate class. Without this distinction, there would be no difference between forced, unplanned outages and accidents.

b. Definition of Prolonged. In order to qualify for an adjustment under this provision, the accident must also result in a "prolonged" outage. EPA proposed in July, 1992 to define "prolonged" to be four months or longer.

Several commenters suggested that EPA's interpretation of prolonged is too rigid, makes the two types of outage adjustments indistinguishable and therefore is inconsistent with Congressional intent. They claim that defining prolonged to be four months or more makes the second clause of section 402(4)(A), allowing adjustments for accidents that caused prolonged outages, unnecessary and redundant. The first basis for adjustment already excludes shutdowns for a continuous period of four calendar months or longer.

Response: In the final regulation, EPA has modified its definition of prolonged. Prolonged is now defined as three months or greater. An examination of the distribution of forced outages at fossil steam units between 1986 and 1990 illustrates that three months is sufficiently greater than the average duration of a forced outage and can be considered prolonged. (In the language of statistics, an outage of three months would be an outlier among points in the distribution of such outages because it lies greater than three units of standard deviation from the mean.)

Although a duration of four months could also be considered extreme, a duration of three months achieves the same purpose and creates a greater distinction with other types of outages. The Agency does not allow any additional requests based on this change in definition.

3. Categorization of Outages.

As mentioned above, EPA proposed the use of six categories to create a framework to evaluate requests for baseline adjustments consistent with Congressional intent and equitable across all affected units. Two categories were not related to outages and are finalized as proposed. The other four categories are discussed below.

Most commenters favored the use of classification categories. Some recommended that the Agency adopt the categories presented in the July, 1992 **Federal Register** notice as proposed, while others offered various modifications. A few commenters believed that Congressional colloquies directed the Agency to consider special circumstances on a case by case basis and not use broadly based categories.

Response: EPA is retaining the categorization approach in making determinations regarding outage adjustments. Contrary to the commenters' assertions, nothing in the legislative history implies that the Administrator must decide on outage hour requests on a case-by-case basis. The use of categories is within the Administrator's discretion as expressed in section 402(4)(A) which states that *"The Administrator, in the Administrator's sole discretion, may exclude periods during which a unit is shutdown for a continuous period for four calendar months or longer * * *."*

EPA believes that categorization provides a rational and factual basis for the Agency's decisions on outage hours and believes such categorization treats similarly situated units in a consistent manner. EPA is choosing to use categories not because they are easy to develop and apply to the particular units, but because it is appropriate to use published criteria that have been subject to open debate and comment.

4. Outage Categories

A number of commenters believed the use of categories to be appropriate, but felt that EPA had not incorporated essential defining characteristics used by Congress during debate. Such characteristics included physical and operating characteristics of the unit (e.g. age, emissions rate), the unit's role in the operating utility's system (e.g single unit systems, only coal-fired unit in utility's system, total fossil capacity of system, type of replacement power, etc.) and the impact on the utility for denying requested outage adjustments.

Response: EPA is adopting, for the NADB version 2.11, a revised classification scheme for outage adjustments for calculated baselines.

The categories have been modified from the July, 1992 **Federal Register** notice in two ways: (1) The Agency has modified former category III (Outages less than 4 months) to reflect the change of definition for "prolonged", when considering accidents resulting in prolonged outages, as discussed above; (2) the Agency has allowed a certain number of adjustments for units with relatively low emissions that would experience a severe allowance impact if their requests were disallowed. This modification is discussed below under the section entitled "Other Outages Four Months or Greater".

Table 1 summarizes the six categories to which EPA now classifies all outage adjustment requests. Tables 2, 3 and 4 list the units with outage requests and the Agency's determination to allow or disallow such requests. Table 2 includes three new requests that qualify as discontinuous but related outages, but because they were not submitted during the comment period for changes to the NADB version 2.0, these requests were disallowed, as discussed in section C of this notice.

TABLE 1.—OUTAGE ADJUSTMENT CLASSIFICATION CATEGORIES

Category	Outage type	Adjustment
I	Forced/planned non-routine maintenance, greater than or equal to 4 months	Allow.
II	Discontinuous but related outages for forced/planned non-routine maintenance, where total duration was 4 months or greater. Discontinuous but related outages for accidents, where total duration was 3 months or greater.	Allow.
III A	Outages 3 months or greater caused by accidents	Allow.
III B	Outages less than 3 months, not caused by an accident, or less than 4 months, not caused by forced/planned non-routine maintenance.	Disallow.
IV A	Outages 4 months or greater, which were not caused by forced/planned non-routine maintenance or accidents, in which the unit's emission rate is less than 1.2 lbs/mmBtu and the allowance impact by not providing allowances to the operating utility is severe.	Allow.
IV B	All other outages 4 months or greater that were economic outages and other outages not classified as forced/planned non-routine maintenance or accidents.	Disallow.

TABLE 2.—SUMMARY OF REQUESTS FOR DISCONTINUOUS BUT RELATED OUTAGES (CATEGORY II)

Operating utility	Plant name(s)	Additional basic allowances	Petition on adjustment before closure of comment period	EPA action
Commonwealth Edison Co	Collins, Joliet 9	366	Yes	Allow.
Taunton, City of	Cleary Flood	255	Yes	Allow.
Jamestown, City of	S A Carlson	121	Yes	Allow.
Cleveland Electric Illum Co	Avon Lake, Bay Shore, Eastlake.	2,369	Yes	Allow.
Pennsylvania Power & Light Co	Holtwood	13	Yes	Allow.
Iowa Public Service Co	George Neal	898	Yes	Allow.
Fort Pierce Utilities	Henry D. King	12	No	Disallow.
Iowa-Illinois Gas and Electric	Riverside	78	No	Disallow.
Springfield, City of	Lakeside	73	No	Disallow.

TABLE 3.—SUMMARY OF REQUESTS FOR OUTAGES LESS THAN FOUR MONTHS (CATEGORIES IIIA AND IIIB)

Operating utility	Plant name(s)	Additional basic allowances	Classification	EPA action
Century Power Corp	Springerville	1,070	III B	Disallow.
Key West, City of	Stock Island	121	III B	Disallow.
Commonwealth Edison Co	Collins	54	III B	Disallow.
Southern Indiana Gas & Electric Co	F B Culley	297	III B	Disallow.
Central Louisiana Elec. Co. Inc	Rodemacher	2,208	III B	Disallow.
Lansing, City of	Eckert Station	331	III B	Disallow.
Texas Municipal Power Agency	Gibbons Creek	871	III B	Disallow.

TABLE 4.—SUMMARY OF REQUESTS FOR OUTAGES FOUR MONTHS OR GREATER THAT DO NOT QUALIFY AS FORCED, NON-ROUTINE MAINTENANCE OR ACCIDENTS (CATEGORIES IV A AND IV B)

Operating utility	Plant name(s)	Additional basic allowances	Classification	EPA action
Central Nebraska Pub P&I Dist	Canaday	533	IV A	Allow.
Portland General Electric Co	Boardman	10,299	IV A	Allow.
Arizona Electric Power Coop Inc	Apache	1,742	IV B	Disallow.
Connecticut Light & Power Co	Devon	946	IV B	Disallow.
Tampa Electric Co	Hookers Point	764	IV B	Disallow.

TABLE 4.—SUMMARY OF REQUESTS FOR OUTAGES FOUR MONTHS OR GREATER THAT DO NOT QUALIFY AS FORCED, NON-ROUTINE MAINTENANCE OR ACCIDENTS (CATEGORIES IV A AND IV B)—Continued

Operating utility	Plant name(s)	Additional basic allowances	Classification	EPA action
Southern Indiana Elec & Gas	F B Culley	297	IV B	Disallow.
Corn Belt Power Coop	Earl F. Wisdom	2,055	IV B	Disallow.
Cedar Falls, City of	Streeter Station	2,642	IV B	Disallow.
Wisconsin Electric Power Co	Presque Isle	547	IV B	Disallow.
Otter Tail Power Co	Hoot Lake	369	IV B	Disallow.
Duke Power Co	Buck, Cliffside, Dan River, G G Allen, Riverbend.	14,348	IV B	Disallow.
PacificCorp	Centralia	2,776	IV B	Disallow.

As noted above, the changed definition of prolonged modifies the categories for adjusting outages, but does not change the status of any unit's request.

5. Other Outages Four Months or Greater.

EPA proposed, in its July, 1992 **Federal Register** notice, not to adjust baselines for outages four months or greater that do not qualify as forced, non-routine maintenance or accidents. Included within this category are outages resulting from loss of load within the utility's system and/or underutilization of a particular unit because cheaper replacement power was available ("economic outages").

Many commenters questioned both the Agency's decision to exclude these types of outages from adjustment and the rationale offered by the Agency in the July, 1992 **Federal Register** notice. Commenters suggested that Congress sought to distinguish the operation of the units under question from peaking units, rather than preclude operations during the baseline period from adjustment.

EPA justified excluding economic outages on the basis that actual operation during the baseline period was considered by the Agency to be "normal" operations, and that utilities should not receive adjustments for units they chose not to operate during the baseline period. Commenters argued that the operation of their particular units was not normal during the baseline period and the Agency's assumption of normalcy is unfounded and misguided. Some commenters contended that their systems experienced an uncharacteristic loss of overall load during the baseline period due to adverse economic conditions. Several commenters requested that the Agency examine historical operating records or even future load expectations to judge what might be considered normal operation over a more representative time horizon than the three years of the baseline period.

The EPA expressed concern, however, in the July, 1992 **Federal Register** notice, regarding adjusting outages for units that were underutilized and at the same time granting allowances to units that supplied the incremental power (that is, giving credit for the same unit of power twice, or double counting). Commenters responded that in many instances such double counting would not in fact occur, because of loss of overall load, replacement with non-sulfur emitting generation or replacement with a unit whose allocation was not based on actual generation but on a fixed capacity factor. Some commenters noted that some cases of Category IV outages result in double counting.

Response: The Agency believes that there must be compelling reasons for it to adjust baselines based on outage requests. In general, EPA maintains that underutilization of units during the baseline period (1985–1987), resulting from either losses in the operating utility's system load or the utility's economic choice to divert generation from one unit to another, are part of a unit's normal operations. Congress, in establishing the baseline, developed a three year period (1985–1987) to standardize what is normal operations for all units and to accommodate fluctuations across multiple years of operation. For circumstances in which Congress felt that the baseline period was not reflective of normal operations, it provided alternative formulations. For example, in section 405(i), phase II units in high growth states are awarded additional basic allowances based on average fuel consumption for any three consecutive calendar years from 1980 to 1989 inclusive. The Agency believes, therefore, that outage adjustments for units experiencing economic or other types of outages are generally unwarranted.

EPA is persuaded, however, that units experiencing a severe allowance impact from a denial of their requested outage adjustment deserve further consideration. In developing the NADB version 2.11, EPA reconsidered the outage requests made in response to NADB version 2.0 and ultimately granted the requests of units that met the following two criteria: (1) Units that had actual 1985 SO_2 emissions rates below 1.2 lbs/mmBtu and (2) units that were operated by a utility that would receive less than half the total number of allowances, if an outage adjustment were denied.

Units with actual 1985 SO_2 emission rates below 1.2 lbs/mmBtu already meet the Phase II limitation imposed by Congress through section 405(b). The allowance trading system encourages units to reduce emissions below that level, but units already below that rate were not generally targeted for reductions. The Agency believes that utilities with these units will need the allocation of allowances primarily to cover their emissions rather than to generate large allowance surpluses through further emission reductions. The Agency does not intend to predict how individual units will meet their acid rain requirements, but believes that utilities with such units that are already operating them with relatively low emissions will be less likely to invest in emission reduction measures and more likely to cover their emissions through their allowance allocation or allowance purchases. Table 5 lists the units requesting outage adjustments and their 1985 SO_2 emissions rates.

TABLE 5.—1985 ACTUAL SO_2 EMISSION RATES FOR UNITS SEEKING OUTAGE ADJUSTMENTS

Plant name; BLR #	Operating utility	1985 actual SO_2 emissions rate (lbs/mmBtu)
Buck 5, 6, 7.	Duke Power Co.	0.00
Cliffside 1, 2.	Duke Power Co.	0.00

TABLE 5.—1985 ACTUAL SO_2 EMISSION RATES FOR UNITS SEEKING OUTAGE ADJUSTMENTS—Continued

Plant name; BLR #	Operating utility	1985 actual SO_2 emissions rate (lbs/mmBtu)
Canaday 1	Central Nebraska Pub P&I Dist.	0.01
Presque Isle 1, 2.	Wisconsin Electric Power Co..	0.21
Apache 2 .	Arizona Electric Power Coop Inc.	0.61
Boardman 1.	Portland General Electric Co..	0.80
Devon 4A .	Connecticut Light & Power Co..	1.05
Devon 3, 4B, 5A, 5B, 6.	Connecticut Light & Power Co..	1.06
Hookers Point 6.	Tampa Electric Co. ..	1.06
Hookers Point 1, 4.	Tampa Electric Co. ..	1.07
Dan River 2.	Duke Power Co.	1.08
Hookers Point 2.	Tampa Electric Co. ..	1.09
Hookers Point 3, 5.	Tampa Electric Co. ..	1.10
GG Allen 2	Duke Power Co.	1.38
GG Allen 1	Duke Power Co.	1.39
Buck 8	Duke Power Co.	1.41
Dan River 1.	Duke Power Co.	1.41
Cliffside 3 .	Duke Power Co.	1.48
Dan River 3.	Duke Power Co.	1.49
Cliffside 4 .	Duke Power Co.	1.50
Riverbend 9.	Duke Power Co.	1.57
Riverbend 10.	Duke Power Co.	1.64
Centralia BW21.	PacificCorp	1.67
Hoot Lake 2.	Otter Tail Power Co .	1.75
Streeter Station 6.	Cedar Falls, City of ..	5.34
F B Culley 1, 2.	Southern Indiana Elec & Gas.	5.68
Earl F. Wisdom 1.	Corn Belt Power Coop.	5.95

For these units with relatively low emissions, the operating utility will have varying abilities to cover their emissions with allowances. The Agency appreciates the shortfall in allowances that utilities may experience without adjustments to their baseline, but believes that only in the severest circumstances is it warranted for the Agency to use its discretion and accept such adjustments. Utilities with small impacts have the flexibility under the Acid Rain Program to shift emissions across units in their system, their power pool and throughout the allowance trading market. Utilities with large impacts require a significant number of allowances to cover their emissions and have fewer options to generate or acquire allowances. The Agency will therefore adjust for outages where the allowance impact, as calculated below, exceeds 100 percent. In quantifying this effect, the Agency developed the following measure for allowance impact:

$$\text{Allowance Impact (in Percent)} = \frac{\text{Allowances With Outage Adjustment} - \text{Allowances Without Outage Adjustment}}{\text{Allowances Without Outage Adjustment}}$$

This measure assesses, on a percentage basis, the number of permanent allowances a utility would receive when the Agency granted or denied its outage adjustment requests. The measure is for the utility as a whole, includes a utility's partial ownership of units within its system, and assumes that operating utilities will receive allowances in proportion to their share of plant ownership. Under title IV, the Agency allocates allowances to the affected unit and, as a matter of policy, does not involve itself in the distribution of those allowances among the owners of the unit. Therefore, this measure of allowance impact is approximate, and in no way does it suggest nor does the Agency endorse a preferred arrangement for distributing allowances. These assumptions were made to identify utilities experiencing severe shortfalls in allowances without adjustments to their baselines.

Table 6 ranks the allowance impact for utilities requesting outage adjustments and operating these units with relatively low emissions. The threshold at which outage adjustments are granted is at 100%. Two plants clearly exceed this threshold, Canaday and Boardman, while the remaining units are significantly below this level. Despite the estimated attribution of allowances to the unit's operating utility, the demarcation between Canaday and Boardman and the other units is sufficiently distinctive to make this threshold level robust.

TABLE 6.—ALLOWANCE IMPACT ON THE OPERATING UTILITY FOR UNITS WITH RELATIVELY LOW EMISSIONS SEEKING OUTAGE ADJUSTMENTS

Operating utility	Plant name(s)	Allowance impact (percent)
Central Nebraska Pub P&I Dist.	Canaday	293
Portland General Electric Co.	Boardman ..	154

TABLE 6.—ALLOWANCE IMPACT ON THE OPERATING UTILITY FOR UNITS WITH RELATIVELY LOW EMISSIONS SEEKING OUTAGE ADJUSTMENTS—Continued

Operating utility	Plant name(s)	Allowance impact (percent)
Arizona Electric Power Coop Inc.	Apache	33
Connecticut Light & Power Co.	Devon	2
Tampa Electric Co ..	Hookers Point.	<1
Wisconsin Electric Power Co.	Presque Isle.	<1
Duke Power Co	Buck, Cliffside, Dan River, Riverbend.	1

F. Adjunct Data File

With publication of the final NADB last July, EPA provided notice that it had created an Adjunct Data File (ADF) which contained non-confidential

information from Form EIA–867 on non-traditional utilities, some of which might be affected under title IV. Although the ADF listed 304 utilities, EPA believed that only a small percentage were affected by the Acid Rain Program requirements. Because the data on Form EIA–867 was insufficient to make applicability determinations, EPA requested comments from utilities listed on the ADF and from other non-traditional utilities that could be affected.

In response to the request for comments, several utilities provided additional information for their ADF units and approximately ten utilities commented that their units are unaffected and should be deleted from the ADF.

Based on the comments submitted, EPA believes that only 3 units listed in the draft ADF are affected, two of which were already listed in the NADB under a prior utility owner. EPA has worked with the various utilities to complete their data submittals.

Because the ADF has the same data elements as the NADB and because the Agency would prefer to have one database listing potentially affected units, these ADF units are now included in the version of NADB published today. ADF units that are affected and have submitted the necessary data will receive allowance allocations if they are eligible (see final allowance allocations rule).

As stated in past notices, the omission of a unit from the NADB does not indicate that the unit is not or will not be affected by the Acid Rain Program requirements. Applicability will be determined under the rules in 40 CFR 72.6.

G. Regulatory Impact Analysis

There is no regulatory impact, per se, from this data base. Economic impacts arise upon the allocation of allowances and the beginning of compliance with the Acid Rain Program in 1995. A regulatory impact analysis has been prepared for the entire Acid Rain program, including the allowance system.

H. Regulatory Flexibility Act

This data base has no effect, per se, on small entities and small communities. The final core acid rain regulations contained a small entity and small community analysis within the regulatory impact analysis.

I. Paperwork Reduction Act

This notice does not request information. Therefore, the Paperwork Reduction Act 44 U.S.C. 3501, *et seq.*, does not apply and no Information Collection Request was prepared.

Dated: March 5, 1993.

Carol M. Browner,

Administrator.

[FR Doc. 93–5855 Filed 3–22–93; 8:45 am]

BILLING CODE 6560–50–M

federal register

Tuesday
March 23, 1993

Part V

Department of Transportation

Federal Aviation Administration

14 CFR Part 121
Pilot Operating and Experience Requirements; Proposed Rule

DEPARTMENT OF TRANSPORTATION

Federal Aviation Administration

14 CFR Part 121

[Docket No. 27210; Notice No. 93-1]

RIN 2120-AD88

Pilot Operating and Experience Requirements

AGENCY: Federal Aviation Administration (FAA), DOT.

ACTION: Notice of proposed rulemaking (NPRM).

SUMMARY: The Federal Aviation Administration proposes to amend its pilot qualification requirements for air carrier pilots by upgrading existing operating experience requirements, establishing a new kind of operating experience requirement, and adding requirements that would reduce the potential for an inexperienced pilot in command to be scheduled to fly with an inexperienced second in command pilot. These amendments are needed because the FAA has determined that the pairing of inexperienced pilots poses a potential safety problem. The proposed requirements would ensure that pilots are given the opportunity within a limited time period to use newly developed knowledge and skills in actual line operations.

DATES: Comments must be submitted on or before June 21, 1993.

ADDRESSES: Comments on this notice should be mailed, in triplicate, to: Federal Aviation Administration, Office of the Chief Counsel, Attention: Rules Docket (AGC-10), Docket No. 27210, 800 Independence Avenue, SW., Washington, DC 20591. Comments delivered must be marked Docket No. 27210. Comments may be examined in room 915G weekdays between 8:30 a.m. and 5 p.m., except on Federal holidays.

FOR FURTHER INFORMATION CONTACT: Mr. Larry Youngblut, Project Development Branch (AFS-240), Air Transportation Division, Flight Standards Service, Federal Aviation Administration, 800 Independence Avenue, SW., Washington, DC 20591; Telephone (202) 267-8096.

SUPPLEMENTARY INFORMATION:

Comments Invited

Interested persons are invited to participate in the making of the proposed rule by submitting such written data, views, or arguments as they may desire. Comments relating to the environmental, energy, federalism, or economic impact that might result from adopting the proposals in this notice are also invited. Substantive comments should be accompanied by cost estimates. Comments should identify the regulatory docket or notice number and should be submitted in triplicate to the Rules Docket address specified above. All comments received on or before the closing date for comments specified will be considered by the Administrator before taking action on this proposed rulemaking. The proposals contained in this notice may be changed in light of comments received. All comments received will be available, both before and after the closing date for comments, in the Rules Docket for examination by interested persons. A report summarizing each substantive public contact with Federal Aviation Administration (FAA) personnel concerned with this rulemaking will be filed in the docket. Commenters wishing the FAA to acknowledge receipt of their comments submitted in response to this notice must include a preaddressed, stamped postcard on which the following statement is made: "Comments to Docket No. 27210." The postcard will be date stamped and mailed to the commenter.

Availability of NPRMs

Any person may obtain a copy of this NPRM by submitting a request to the Federal Aviation Administration, Office of Public Affairs, Attention: Public Inquiry Center, APA-430, 800 Independence Avenue, SW., Washington, DC 20591, or by calling (202) 267-3484. Communications must identify the notice number of this NPRM.

Persons interested in being placed on the mailing list for future NPRM's should request from the above office a copy of Advisory Circular No. 11-2A, Notice of Proposed Rulemaking Distribution System, which describes the application procedure.

Background

On November 15, 1987, an air carrier operating under Part 121 was involved in an accident which was found by the NTSB to be partly due to the combined inexperience of the two pilots. This accident involved a Continental Airlines McDonnell Douglas DC-9-14 which crashed on takeoff in Denver. The NTSB found that while the aircraft's pilot in command (PIC) was an experienced pilot with apparently better-than-average flying skills, he was relatively inexperienced as captain on air carrier turbojet airplanes, and he had very little total flying time in the DC-9. In addition, according to the NTSB, the PIC was not seasoned in supervising or judging first officers. The NTSB found that the second in command (SIC) had little experience in the DC-9 or in any swept-wing turbojet airplane. In addition, the SIC, who had not flown for the previous 24 days, was flying the aircraft when it crashed. Of the 82 passengers and crewmembers, 29 were fatally injured.

On January 21, 1988, the FAA issued Air Carrier Operations Bulletin (ACOB) 8-88-1 which provided voluntary guidelines for certificate holders operating under Part 121 in the scheduling and pairing of pilots on flights, as well as recommended actions for pilots with low experience levels.

On July 19, 1988, the FAA issued further guidance to FAA field staff as a follow-up to the operations bulletin. This guidance requested that principal operations inspectors (POIs) review their certificate holders' policies on crew pairing and scheduling and send copies of these policies (from the certificate holder's operations manual) to FAA headquarters.

On November 3, 1988, the NTSB issued its findings and recommendations on the Denver accident, stating that the pairing of the pilots on this flight "was a factor in the accident." The NTSB recommended (Recommendation A-88-137) that the FAA issue requirements that establish minimum experience levels for each PIC and SIC that would, in effect, "prohibit the pairing on the same flight of pilots who have less than the minimum experience in their respective positions."

The FAA considered these recommendations and decided that it would have been premature to issue mandatory crew pairing requirements at that time. Only ten months previously, the FAA had issued its latest guidance documents containing specific crew pairing guidelines for certificate holders operating under part 121. The FAA, therefore, wanted to allow more time for air carriers to put these guidelines into effect.

On September 20, 1989, a second air carrier operating under part 121 was involved in an accident which the NTSB found was partly due to the inexperience of the pilots. This accident involved a USAir B-737 that aborted its takeoff and skidded into the East River in New York City. The NTSB found that the PIC, while having some 3,000 hours as an SIC in a B-737, had only 138 hours as a PIC in air transport aircraft; the SIC had been recently hired and had just qualified for B-737 service. The NTSB also found that the SIC "was conducting his first non-supervised line takeoff in a B-737, and also his first

takeoff after a 39-day non-flying period." Of the 61 passengers and crewmembers on this flight, 2 were fatally injured.

Past Practices and Current and Future Trends

The FAA has reviewed accident data and NTSB recommendations related to crew experience, and in addition has reviewed past and present practices and trends in the aviation environment that are affecting and will increasingly affect crew experience levels. Recent practices and trends necessitate revising current pilot qualification regulations to upgrade minimum crew experience and to require pilots to use newly acquired knowledge and skills in actual operations within a short time after training is completed and proficiency is demonstrated.

One practice generally followed by air carriers is the use of a bidding system to schedule flight crews. Pilots generally bid on those flights that are the most favorable to the pilot (e.g., time of day). Once all pilots have bid, schedules are assigned based on seniority. Pilots with the most seniority, and thus the most experience, usually win their bids and are awarded the most desirable flight schedules. Pilots having the least seniority and experience with the airline, or with the pilot duty position, usually do not win their bids and therefore receive the least desirable flight schedules. Moreover, as another problem, the least experienced pilots may be also assigned to a reserve pool. In the reserve pool these pilots may have to wait their turn for days or even weeks before they receive a flight assignment. This system often prevents newly qualified pilots from using and perfecting their new flight skills immediately after qualifying on a new aircraft. It also increases the likelihood of pairing inexperienced pilots on the same flight.

Also, in recent years manufacturers have introduced a greater number of new aircraft containing more equipment and systems variations within type. This has been in response to air carrier requirements for increasingly varied and sophisticated aircraft needed to cope with different routes and technology changes. As a result, pilots must not only learn the aircraft handling characteristics, they must also be able to work with a variety of aircraft equipment such as automated flight control and flight management systems and software.

Crew Pairing Committee

In response to the accidents, practices, and trends described above, and because many air carriers were not implementing the FAA guidelines on crew experience, the FAA requested the Joint Government/Industry Task Force on Flight Crew Performance, which was established in 1987, to form a committee to develop recommendations for establishing crew pairing requirements.[1]

The FAA received recommendations from a majority of the Task Force Committee, from the NTSB, and separate recommendations from the two pilot associations that were members of the committee. In addition to considering these recommendations, the FAA internally reviewed the identified problems and possible solutions. This proposal is based on the FAA's internal review and the recommendations previously referenced.

On September 13, 1990, the committee recommended requiring all certificate holders operating under part 121 to provide a minimum level of experience for pilot crews. Specifically, the committee recommended rule changes in three areas:

1. It recommended adding a requirement that PICs or SICs who are trained to fly new equipment obtain a minimum number of flight hours (100) within a reasonably short period of time (120 days) after a pilot demonstrates his or her piloting skills (i.e., from initiation of the airline transport pilot certificate (ATPC) type rating practical test or completion of the proficiency check). This will allow the pilot to obtain enough flying hours in the airplane to ensure that those skills are not lost once the training and testing have ended.

The committee referred to the concept of ensuring that newly-acquired skills are used in actual operations as soon as possible after they are acquired as "consolidation." The FAA has decided to use this term in this proposal and to refer to the proposed 120-day period as the "consolidation period." The FAA recognizes that this use of the word "consolidation" is broader than its application in psychology textbooks where it is usually meant to identify a period of time that is part of the training/learning process or that occurs almost immediately after completion of a training or teaching session. Consolidation or consolidation period as used by the committee and in this rulemaking includes the early stages of the actual reinforcement phases that follow after the end of the formal training.

Under the committee recommendation, a pilot who does not meet the minimum number of flight hours within the 120-day consolidation period would be required to complete some type of Line Oriented Flight Training (LOFT) period in a flight training device or flight simulator, airplane training period, or actual flight under observation of a pilot check airman before the pilot would be allowed to fly the new equipment again. The committee recommendation also included minor changes in the supervised operating experience requirements for PICs and SICs in turbojet powered airplanes currently contained in the FAR.

2. It recommended adding several operating restrictions generally relating to weather or runway conditions that would apply to an SIC who has fewer than 100 hours of flight time in the type of airplane being flown.

3. It recommended adding crew pairing limitations that would require either the PIC or SIC assigned to a flight to have at least 75 hours of flight time in that position on the airplane type being flown. However, committee members Air Line Pilots Association (ALPA) and Allied Pilots Association (APA) submitted separate views on elements of this recommendation. Their views are addressed in the discussion which follows on "Pairing Restrictions."

In response to these recommendations, the FAA has issued additional advisory material and is proposing regulatory changes to enhance crew experience levels. The proposed changes in this NPRM are designed to work with other rulemaking activities as part of an overall effort to improve flight crewmember performance. Other recent rulemaking activities completed or underway include the following: (1) The FAA issued Special Federal Aviation Regulation No. 58 establishing a voluntary Advanced Qualification Program (AQP), which gives operators the option of designing training programs that are proficiency-based, i.e., based on successful completion of training, checking, and qualification activities rather than completion of a set number of training hours. The AQP provides for Cockpit Resource Management (CRM) training which trains PICs and SICs to operate successfully as a crew through effective communication and coordination. (2) The FAA is considering rulemaking on Air Carrier Training Programs which would require CRM training for crewmembers and certain operations

[1] This task force was later subsumed by the Air Transportation Personnel Training and Qualifications Advisory Committee, established by FAA Order 1110.115, May 2, 1990. Today it continues to function as a subcommittee by the same name under the Aviation Rulemaking Advisory Committee.

personnel of certificate holders operating under part 121 and part 135 and require certain certificate holders operating under part 135 to comply with part 121 training, checking, and qualification requirements.

Discussion of FAA Proposal

In this NPRM, the FAA proposes the following crew experience requirements:

1. A PIC or SIC qualifying to fly an airplane for which an airline transport pilot (ATP) certificate with type rating, additional type rating, or § 121.441 proficiency check is required would be required to complete 100 hours of line operating flight time, including supervised operating experience, within a 120-day consolidation period beginning with initiation of an airman certification practical test or upon completion of a proficiency check in the new airplane (proposed new § 121.434(g)).

2. Operating experience requirements for PICs and SICs would be increased and modified (§ 121.434(c)).

3. Operating restrictions for inexperienced SICs would be imposed (proposed new § 121.438(a)).

4. Flight hour requirements in airplane type for pairing PICs and SICs would be applied (proposed new § 121.438(b)).

The specific proposed requirements are discussed below.

Consolidation Period

Under present requirements of Part 121, PICs and SICs who have completed training and demonstrated their proficiency to operate an airplane type for the first time must, in most cases, perform their duties under supervision. That is, they must operate the airplane for a certain number of hours under the supervision of a pilot check airman designated by the certificate holder. The required number of supervised hours of operating experience ranges from 10 to 25 hours. Under the present rules, a pilot may obtain his or her supervised operating experience immediately after qualifying (i.e., after successfully completing a type rating practical test or proficiency check) or several months after qualifying. In such a case, the first 10–25 hours, as applicable, of flight assignment under Part 121 would be under the supervision of a pilot check airman. Once a pilot has completed the required supervised hours, the pilot may operate that airplane in any operations permitted by the certificate holder's operations specifications. Thus, under present rules a PIC or an SIC may meet the regulatory requirements for a flight assignment under Part 121 without having operated the airplane for several months after having demonstrated proficiency. In this instance, the pilot would not have consolidated those skills demonstrated during qualification.

Pilots who have satisfactorily completed training and demonstrated proficiency in an airplane and who do not soon thereafter have an opportunity to consolidate the newly acquired knowledge and skills in actual operations may lose some proficiency in the newly acquired knowledge and skills. The loss of knowledge and skills is particularly acute if a pilot who has just completed training and qualification in an airplane is then assigned to an airplane for which he or she was previously qualified; that is, the pilot returns to a situation in which the pilot uses old skills after having just been trained in new skills. The loss of knowledge and skills can be particularly acute, in this case, because the return to use of previously acquired knowledge and skills can block newly acquired knowledge and skills before the pilot has fully absorbed the new knowledge and skills, that is, before the new knowledge and skills have been consolidated.

The committee concluded and the FAA agrees that it is important for a pilot who has qualified in an airplane to have an opportunity to consolidate the newly developed piloting skills and procedural knowledge through substantial line experience in the airplane within a reasonably short period of time after completing training and satisfactorily demonstrating proficiency. Therefore, the FAA proposes in new § 121.434(g) the following:

- For each airplane for which an ATPC with type rating, an additional type rating, or a proficiency check is required, a PIC or SIC would be required to obtain 100 hours of line operating flight time within a 120-day consolidation period after initiation of a practical test or completion of a proficiency check. This 100 hours would include the hours of operating experience when the PIC or SIC would be under the supervision of a pilot check airman under present § 121.434(c). (See below for supervised operating experience requirements.)
- In cases where a PIC or SIC performs flight time in another type airplane operated by the certificate holder at any time after the 120-day consolidation period begins, the pilot could not be assigned to the type airplane on which the pilot must complete the consolidation requirement until the pilot receives refresher training as provided in the certificate holder's approved training program and conducted by a proficiency pilot check airman.

Each certificate holder must develop training objectives for refresher training for each make and model airplane used in Part 121 operations. Refresher training should ensure that pilots have retained, or are allowed to regain, the level of proficiency needed to serve in part 121 operations. This training should focus on, among other things, procedural knowledge regarding the operation of the aircraft (e.g., programming the aircraft's flight management system) and critical skills such as engine inoperative approaches and missed approaches. Refresher training may consist of Special Purpose Operational Training or an airplane flight training period when a flight simulator or flight training device is unavailable. Special Purpose Operational Training is described in AC 120–35b, "Line Operational Simulations: Line-Oriented Flight Training, Special Purpose Operational Training, and Line Operational Evaluation."

- In cases where a PIC or SIC fails to complete 100 hours of line operating flight time in the airplane within the 120-day consolidation period, a certificate holder would be able to extend the period for up to 30 days for a maximum of 150 days if the following requirements are met:

1. The pilot continues to meet all other applicable requirements of subpart O of part 121; and

2. On or before the 120th day the pilot completes refresher training conducted by an appropriately qualified pilot check airman. However, the pilot need not receive this refresher training as provided in the certificate holder's approved training program if it is determined that the pilot has retained an adequate level of proficiency after having performed pilot duties on a supervised line observation flight conducted by a pilot check airman.

If a pilot has not completed one of the options described above, to ensure that the newly acquired knowledge and skills are consolidated, the pilot would have to be requalified under the certificate holder's approved training program.

These proposed requirements differ from the committee's recommendation, which seems to imply that the 120-day period might be extended indefinitely if a pilot completed one of the refresher options. The proposed limitations are consistent with a recommendation made by ALPA that continuation of the consolidation period should not be open

ended. The FAA specifically invites comments on the feasibility and adequacy of the 120-day period and on the related issues discussed above and may revise these requirements in light of comments received.

The FAA also recognizes that there are categories of individuals, who because of previous experience in a particular type airplane, should not be required to complete a consolidation period. Thus, new paragraphs § 121.434(h) (1) and (2) provide for exceptions to the consolidation rule.

Supervised Operating Experience

In accordance with the committee recommendations, this proposal would amend the requirements on supervised operating experience in § 121.434(c)(3) (i) and (ii) and § 121.434(f) as follows:

• For PICs and SICs who have completed initial training, the minimum hours of supervised operating experience would remain the same, but the proposed rule would require that each PIC or SIC complete at least 4 operating cycles in his or her respective duty positions. Each operating cycle is a complete flight segment consisting of a takeoff, climb, an enroute cruise portion, descent, and a landing. In addition the proposed rule would require that the PIC or SIC be the pilot flying the aircraft in at least two of these cycles.

• For PICs who have completed transition training, the requirement for supervised operating experience would be increased from 15 to 25 hours for Group II (turbojet powered) airplanes and for all airplanes the PIC would be required to complete at least four operating cycles in the PIC seat. The PIC would have to be the pilot flying the aircraft in at least two of these cycles.

• For SICs who have completed transition training, the hourly requirements for supervised operating experience would remain the same and the SIC would be required to complete at least four operating cycles in the SIC seat. The SIC would have to be the pilot flying the airplane in at least two of these cycles.

• For PICs who have completed transition training, up to 50% of the hours of supervised operating experience could be reduced by 1 hour for each takeoff and landing. PICs or SICs who have received initial training and SICs who have received transition training could not reduce supervised operating experience requirements in this manner. This is a change from present § 121.434(f), which permits reductions for all categories of flight crewmember hours of supervised operating experience required by that section.

The proposal to require that each pilot complete at least four operating cycles in his or her respective duty position (at least two as the pilot flying the airplane) is included to ensure that qualifying pilots obtain experience in all critical phases of a flight operation. In the case of some long range flights the minimum number of supervised operating experience hours may be met after two or three flights, without the pilot having obtained sufficient experience in takeoffs and landings. Under the proposed rule, the minimum number of cycles must be completed even if the supervised operating experience hours have already been accomplished.

The FAA is proposing three additional changes to the supervised operating experience requirements that were not addressed by the committee but are necessary to make the new consolidation rule work effectively. The proposed changes are as follows:

• Present § 121.434(a) prohibits a certificate holder from using any person "as a required crewmember on an airplane unless he has completed, on that type airplane and in that crewmember position, the operating experience requirements required" by that section. The word "satisfactorily" would be added before "completed" to make it clear that more than just meeting the minimum number of hours of operating experience is required. This change will ensure that the intent of this rule is met, namely, that the operating experience must not only be under appropriate supervision but also that the person supervising an individual's performance must be assured that the individual being supervised has the required knowledge and skills and is competent to perform assigned duties in revenue operations and to continue the consolidation period.

• In paragraph (c)(1)(ii) of § 121.434 the words "the certificate holder's approved training program includes a course of training in an airplane simulator under § 121.409(c) and" would be removed. The effect of this change would be to require that whenever a PIC is completing initial or upgrade training under § 121.434 at least one flight leg that includes a takeoff and landing must be observed by an FAA inspector. Under the present rule observance by an FAA inspector is required only when the approved training program includes a course of training in an airplane simulator.

• A third change to the present operating experience rule would be in paragraph (c)(2) of § 121.434. At present, this paragraph allows a SIC to obtain credit for operating experience hours during which the SIC is performing the duties of a SIC under the supervision of a pilot check airman or observing from the flight deck the performance of those duties by another SIC. Under this proposed change an SIC would not be authorized to gain credit for any observation hours, only for those hours during which the SIC has performed the actual duties of an SIC. This change is necessary to ensure that the newly trained SIC immediately begins consolidating newly developed knowledge and skills by actually performing line operations. This change was one of the NTSB recommendations (Recommendation A–88–138) issued following the November 1987 Continental Airlines Inc. crash in Denver discussed above.

Operating Restrictions

In cases where an SIC has fewer than 100 flight hours in the airplane being flown, and in certain situations, the PIC would be required, under proposed § 121.438(a) to make all takeoffs and landings, unless the PIC is a check airman. Those situations would include FAA designated special airports requiring special airport qualification, those special airports designated by the certificate holder, and any airport when one or more of the following conditions exist either for the airport or the runway to be used, as appropriate:

• The prevailing visibility value in the latest weather report is at or below ¾ mile.

• The runway visual range for the runway to be used is at or below 4000 feet.

• The runway to be used has water, snow, slush or similar conditions which may adversely affect airplane performance (e.g., takeoff, directional control, climbout, obstacle clearance, stopping).

• The braking action on the runway to be used is reported to be less than "good".

• The crosswind component for the runway to be used is in excess of 15 knots.

• Windshear is reported in the vicinity.

• Other conditions in which the PIC determines it to be prudent to exercise the PIC's prerogative.

This amendment is intended to ensure that an SIC with limited experience does not make a takeoff or landing in adverse conditions where a problem may arise that would require a more experienced pilot at the controls.

Pairing Restrictions

Under proposed § 121.438(b), a PIC and an SIC could not be assigned to the same flightcrew if each has fewer than 75 hours of line operating flight time, including supervised operating experience, on the airplane type. This means that the PIC or SIC would have to have at least 75 hours of line operating flight time on the airplane type. It would allow the pairing of a pilot with 75 hours of flight time with a pilot having zero hours of flight time (although the pilot with zero hours would have to be accompanied by a pilot check airman). For a PIC who has upgraded from the SIC position in the same airplane type, the required 75 hours of line operating flight time would include hours flown both as PIC and as SIC. The proposal would also provide for relief from these pairing restrictions in the form of a deviation authority granted by the Administrator.

Both the APA and ALPA stated that the committee's recommendations were too low. ALPA recommended that "an initial PIC and an initial SIC should not be paired together if both have fewer than 100 hours in their respective positions on the airplane in which they have most recently qualified." The FAA may, in the final rule, increase the minimum crew pairing experience requirements to the number of hours recommended by ALPA, and is therefore specifically inviting comments on this issue. The FAA would consider an increase to as many as 100 hours as within the scope of this notice.

The committee recommendation applies these crew pairing restrictions only to PICs and SICs who are qualifying for those positions for the first time. The committee recommendation does not apply the restrictions if a pilot is upgrading from SIC to PIC on the same airplane type or is transitioning from one airplane type to another. Under the committee recommendation, a new PIC in a particular type airplane with only 25 hours of operating experience in that airplane could be paired with an SIC who has transitioned from another airplane type and who has only 15 hours of operating experience in the airplane type. This is in contrast to the ALPA recommendation that the restrictions also apply to transitioning pilots.

The FAA would like public comment on these recommendations for applying the crew pairing restrictions. The FAA is proposing in this NPRM that the 75-hour minimum crew pairing restrictions also apply to transitioning pilots, as recommended by ALPA, in order to allow this option to be considered for the final rule.

The amendment is intended to prevent the pairing of two pilots both of whom may not be experienced enough with that airplane type to handle a problem if one arises.

Deviation Authority

Because the proposed requirements could be impractical for certificate holders in certain situations, the FAA proposes to include deviation authority within the consolidation period rule and the crew pairing rule (proposed §§ 121.434(h) and 121.438(b)). Deviations would be available only when: (1) A new certificate holder hires pilots who are also new to Part 121 operations, or to the type of airplane being operated, or (2) a certificate holder is adding new airplanes to its fleet or reassigning pilots to a new domicile where they will be operating different aircraft.

Definitions

The following definitions are proposed for inclusion in § 121.431.

Consolidation is the process by which a person through practice and practical experience becomes proficient in newly acquired knowledge and skills.

Line operating flight time is flight time performed in operations under this part.

Operating cycle is a complete flight segment consisting of a takeoff, climb, enroute portion, descent, and a landing.

Effective Date

For most of the proposed requirements the FAA assumes that more than a 30 day effective date would be needed to allow time for certificate holders to plan and implement a system for scheduling flight crews to meet the new requirements.

Under the proposed rule the requirement for increased supervised operating experience (§ 121.434(c)(3)); the consolidation requirement (§ 121.434(g)); and the prohibition against SICs acquiring operating experience while observing the performance of those duties by another SIC from the flight deck (§ 121.434(c)(2)) would all apply only to pilots who satisfactorily complete any portion of an airman certification practical test or satisfactorily complete a proficiency check on or after the effective date.

Under the SIC operating limitations and crew pairing requirements of proposed § 121.438, the specified number of hours must have been accumulated before any flight scheduled on or after the effective date.

The FAA invites public comment on the length of time needed between the issuance of the final rule and its effective date.

Regulatory Evaluation Summary

This section summarizes the full regulatory evaluation prepared by the FAA that provides detailed estimates of the economic consequences of this proposed regulatory action. This summary and the full evaluation quantify, to the extent practicable, estimates of the costs and benefits to the private sector, consumers, and Federal, State, and local governments.

Executive Order 12291, dated February 17, 1981, directs Federal agencies to promulgate new regulations or to modify existing regulations only if potential benefits to society outweigh potential costs for each regulatory change. The order also requires the preparation of a Regulatory Impact Analysis of all "major" rules except those responding to emergency situations or other narrowly-defined exigencies. A "major" rule is one that is likely to have an annual impact on the economy of $100 million or more, to have a major increase in consumer costs, or to have a significant adverse effect on competition.

The FAA has determined that this proposal is not major as defined in the Executive Order. Therefore, a full regulatory analysis that includes the identification and evaluation of cost-reducing alternatives to the proposal has not been prepared. Instead, the Agency has prepared a more concise regulatory evaluation that analyzes only this proposal without identifying alternatives. In addition to a summary of the regulatory evaluation, this section also contains an initial regulatory flexibility determination required by the 1980 Regulatory Flexibility Act (Pub. L. 96–354) and an international trade impact assessment. The complete regulatory evaluation, which contains more detailed economic information than this summary provides, is available in the docket.

Cost/Benefit Analysis

The primary objective of this proposed rule is to enhance aviation safety. The costs and benefits associated with the proposed amendments to the flight crewmember operating experience requirements of part 121 are presented below.

Costs

The proposed amendments add several requirements which would result in increased costs to Part 121 air carriers. The requirement that SICs

receive supervised operating experience while performing the duties of a copilot, rather than merely observing that function from a jump seat, would add $31.2 million over the years 1993–2002, or $17.7 million, discounted at 10 percent and expressed in 1991 dollars. The additional operating experience requirements for transitioning turbojet PICs would cost $44.7 million over the same 10-year period, or $25.6 million discounted. Initial and transitioning SICs in Group I (propeller driver) airplanes could reduce the operating experience requirements by substituting takeoffs and landings; this is expected to result in cost savings of $370,000 over the 10-year period, or $160,000 discounted, for those SICs who would have used observation, rather than actual flight experience, to meet the operating experience requirements under the existing rule. Transitioning PICs in Group I airplanes could also realize a cost savings of $4.5 million over 10 years, or $2.6 million, discounted, by the substitution of takeoffs and landings for some of the hours of operating experience.

The proposed rule would require initial and transitioning PICs and SICs to consolidate their skills by acquiring 100 hours of operating experience over a 120-day period. Those who failed to do so could be allowed an additional 30 days to complete this requirement, provided a check airman conducted a line observation flight to determine whether the PIC or SIC candidate had shown sufficient progress toward consolidation of skills and knowledge. If necessary, refresher training would also be required. The FAA estimates that 10 percent of the pilots would not complete their consolidation in the requisite time and that half of these pilots would need refresher training before they continued their consolidation. The cost of line observation flights and refresher training would be $5.7 million over 10 years, or $3.3 million discounted at 10 percent.

The requirement that PICs make all takeoffs and landings under adverse weather and runway conditions when the SIC has fewer than 100 flight hours in the airplane being flown is not expected to interfere with the proposed consolidation requirements for SICs, therefore, no costs were attributed to this requirement. The crew pairing requirement, which would prohibit two pilots from flying together if each of them has fewer than 75 hours in the airplane, would impose one-time costs on some air carriers to develop a software program to prevent such pairing. Many air carriers already have such programs. The FAA estimates that the cost of this requirement would be $91,000 in 1993.

The total costs of the proposed amendments are $78.0 million over the years 1993–2002, or $44.6 million discounted at 10 percent and expressed in 1991 dollars.

Benefits

The potential benefits of the proposed rule are based on the possibility of preventing fatalities, injuries, and property damage from accidents due to the inexperience of flight crewmembers.

The FAA has conducted an analysis of past accidents and actions that have already been undertaken to address the probable causes and contributing factors of those accidents. The FAA's analysis of regulations normally assumes that, in the absence of action on the part of the FAA, past accident trends serve as a sound basis for projecting future trends, and thus, for projecting the likely benefits of the action under consideration.

Although the two accidents described above were found to have been related, in part, to the inexperience of the flight crew, the FAA does not have sufficient information to quantify the benefits of avoiding future accidents that may result from pilot inexperience. However, if the requirements were effective in averting the equivalent of the damages of one accident (represented by an average of the two accidents described above), the benefits would be $63.5 million or $37.2 million discounted over the years 1993–2002.

The rule would be cost-beneficial if it were to avert the equivalent of 1.2 accidents of the type that have been caused in the past decade in part as a result of pilot inexperience. The rule also addresses a range of experience requirements that the FAA believes would make a cost-effective contribution to accident reduction through improved crewmember experience. The FAA, however, solicits comments about how the rule can be maximally cost-effective, so as to achieve the highest net benefit.

Initial Regulatory Flexibility Determination

The Regulatory Flexibility Act of 1980 (RFA) requires Federal agencies to review rules that may have a "significant economic impact on a substantial number of small entities." The FAA has adopted criteria and guidelines[2] for rulemaking officials to apply when determining whether a proposed or existing rule has any significant economic impact on a substantial number of small entities.

The entities that would be affected by this rule are air carriers operating under part 121. These air carriers are within the general classification of "operators of aircraft for hire." Based on the Regulatory Flexibility Criteria and Guidance, the size threshold for operators of aircraft for hire is nine aircraft owned, while the cost threshold varies from about $4,300 to $110,100 in 1991 dollars, depending on type of service and/or fleet seating capacity. A substantial number of carriers is a number of carriers that is not fewer than 11 or which is more than one-third of affected small entities.

The FAA has determined that the proposed rule will not have a significant economic impact on a substantial number of small entities. Approximately 40 air carriers operating under part 121 could be considered small entities. The costs of the proposed rule to carriers operating either large turbojet or turboprop aircraft would not exceed the threshold limits given above. Only 3 small air carriers operating unscheduled reciprocating engine airplanes would incur costs of approximately $6,000. Although this amount exceeds the threshold of $7,400 in 1991 dollars established in the FAA's Criteria and Guidance, a significant number of carriers would not be affected. Therefore, the FAA has determined that the proposed rule would not have a significant economic impact on a substantial number of small entities.

International Trade Impact Assessment

The proposed rule would have little or no impact on international trade. U.S. air carriers operating in international markets would incur additional costs, primarily for supervised operating experience requirements, whereas foreign air carriers operating in the same markets would not be affected by the proposed rule. If the cost of the proposed rule were borne entirely by U.S. carriers serving international markets it would still represent a negligible amount of the projected 10-year revenues from international operations.

Federalism Implications

The regulations herein would not have substantial direct effects on the states, on the relationship between the national government and the states, or on the distribution of power and responsibilities among the various levels of government. Therefore, in accordance with Executive Order 12612,

[2] U.S. Department of Transportation, Federal Aviation Administration. Regulatory Flexibility Criteria and Guidance. FAA Order 2100.14A. September 16, 1986.

it is determined that this regulation will not have federalism implications sufficient to warrant the preparation of a Federalism Assessment.

Conclusion

For the reasons discussed in the preamble, and based on the findings in the Regulatory Flexibility Determination and the International Trade Impact Analysis, the FAA has determined that this proposed regulation is not major under Executive Order 12291. In addition, the FAA certifies that this proposal, if adopted, will not have a significant economic impact, positive or negative, on a substantial number of small entities under the criteria of the Regulatory Flexibility Act. This proposal is considered significant under DOT Regulatory Policies and Procedures (44 FR 11034; February 26, 1979). An initial regulatory evaluation of the proposal, including a Regulatory Flexibility Determination and Trade Impact Analysis, has been placed in the docket. A copy may be obtained by contacting the person identified under "**FOR FURTHER INFORMATION CONTACT**."

List of Subjects in 14 CFR Part 121

Air safety, Air transportation, Aviation safety, Drug abuse, Narcotics, Safety, Transportation.

The Proposed Amendment

In consideration of the foregoing, the Federal Aviation Administration proposes to amend part 121 of the Federal Aviation Regulations (14 CFR part 121) as follows:

PART 121—CERTIFICATION AND OPERATIONS: DOMESTIC, FLAG, AND SUPPLEMENTAL AIR CARRIERS, AND COMMERCIAL OPERATORS OF LARGE AIRCRAFT

1. The authority citation for part 121 continues to read as follows:

Authority: 49 U.S.C. App. 1354(a), 1355, 1356, 1357, 1401, 1421–1430, 1472, 1485, and 1502; 49 U.S.C. 106(g).

2. Section 121.431(b) is revised to read as follows:

§ 121.431 Applicability.

* * * * *

(b) For the purpose of this subpart, the airplane groups and terms and definitions prescribed in § 121.400 of this part and the following definitions apply:

Consolidation is the process by which a person through practice and practical experience becomes proficient in newly acquired knowledge and skills.

Line operating flight time is flight time performed in operations under this part.

Operating cycle is a complete flight segment consisting of a takeoff, climb, enroute portion, descent, and a landing.

3. Section 121.434 is amended by revising the title; removing the flush paragraph at the end of paragraph (b); removing the words "the certificate holder's approved training program includes a course of training in an airplane simulator under § 121.409(c) and" in paragraph (c)(1)(ii); revising the introductory text of paragraphs (a), (b), and (c); revising paragraphs (b)(2), (c)(2), (c)(3) introductory text, (c)(3)(i), (c)(3)(ii), and (f); and adding new paragraphs (a)(3), (g) and (h) before the flush paragraph to read as follows:

§ 121.434 Operating experience, operating cycles, and consolidation of knowledge and skills.

(a) No certificate holder may use a person nor may any person serve as a required crewmember on an airplane unless the person has satisfactorily completed, on that type airplane and in that crewmember position, the operating experience, operating cycles, and the line operating flight time for consolidation of knowledge and skills required by this section, except as follows:

* * * * *

(3) Separate operating experience, operating cycles, and line operating flight time for consolidation of knowledge and skills are not required for variations within the same type airplane.

(b) In acquiring the operating experience, operating cycles, and line operating flight time for consolidation of knowledge and skills, crewmembers must comply with the following:

* * * * *

(2) The operating experience, operating cycles, and line operating flight time for consolidation of knowledge and skills must be acquired after satisfactory completion of the appropriate ground and flight training for the particular airplane type and crewmember position.

* * * * *

(c) Pilot crewmembers must acquire operating experience and operating cycles as follows:

* * * * *

(2) A second in command pilot must perform the duties of a second in command under the supervision of an appropriately qualified pilot check airman.

(3) The hours of operating experience and operating cycles for all pilots are as follows:

(i) For initial training, 15 hours in Group I reciprocating powered airplanes, 20 hours in Group I turbopropeller powered airplanes, and 25 hours in Group II airplanes. Operating experience in both airplane groups must include at least 4 operating cycles (at least 2 as the pilot flying the airplane).

(ii) For transition training, except as provided in paragraph (c)(3)(iii) of this section, 10 hours in Group I reciprocating powered airplanes, 12 hours in Group I turbopropeller powered airplanes, 25 hours for pilots in command in Group II airplanes, and 15 hours for second in command pilots in Group II airplanes. Operating experience in both airplane groups must include at least 4 operating cycles (at least 2 as the pilot flying the airplane).

* * * * *

(f) Except for pilots meeting requirements in Group II airplanes, flight crewmembers may substitute one additional takeoff and landing for each hour of flight to meet the operating experience requirements of this section, up to a maximum reduction of 50% of flight hours. The hours of operating experience for pilots in command meeting transition training requirements in Group II airplanes under paragraph (c)(3)(ii) of this section may be reduced to 50 percent of the hours required by this section by the substitution of one additional takeoff and landing for each hour of flight.

(1) The hours of operating experience for pilots in command meeting initial training operating experience requirements in Group II airplanes and for second in command pilots meeting either initial or transition training operating experience requirements in Group II airplanes may not be reduced under this paragraph.

(2) Notwithstanding the reductions in programmed hours permitted under §§ 121.405 and 121.409 of subpart N of this part, the hours of operating experience for flight crewmembers are not subject to reduction other than as provided in paragraphs (e) and (f) of this section.

(g) Except as provided in paragraph (h) of this section, pilot in command and second in command crewmembers must acquire at least 100 hours of line operating flight time for consolidation of knowledge and skills (including operating experience required under paragraph (c) of this section) within 120 days after the satisfactory completion of:

(1) Any part of the flight maneuvers and procedures portion of either an airline transport pilot certificate with type rating practical test or an additional type rating practical test, or

(2) A § 121.441 proficiency check.

(h) The following exceptions apply to the consolidation requirement of paragraph (g) of this section:

(1) Pilots who have qualified and served as second in command on a particular type airplane before the effective date are not required to complete line operating flight time for consolidation of knowledge and skills as pilot in command.

(2) Pilots who have completed line operating flight time for consolidation of knowledge and skills while serving as second in command on a particular type airplane after the effective date are not required to repeat line operating flight time for consolidation of knowledge and skills before serving as pilot in command on the same type airplane.

(3) If, before completing the required 100 hours of line operating flight time, a pilot serves as a pilot in another airplane type operated by the certificate holder, the pilot may not serve as a pilot in the airplane for which the pilot has newly qualified unless the pilot satisfactorily completes refresher training as provided in the certificate holder's approved training program and that training is conducted by an appropriately qualified pilot check airman.

(4) If the required 100 hours of line operating flight time are not completed within 120 days, the certificate holder may extend the 120-day period to no more than 150 days if—

(i) The pilot continues to meet all other applicable requirements of subpart O of this part; and

(ii) On or before the 120th day the pilot satisfactorily completes refresher training conducted by an appropriately qualified pilot check airman as provided in the certificate holder's approved training program, or a pilot check airman determines that the pilot has retained an adequate level of proficiency after observing that pilot in a supervised line operating flight.

(5) The Administrator, upon application by the certificate holder, may authorize deviations from the requirements of paragraph (g) of this section by an appropriate amendment to the operations specifications in any of the following circumstances:

(i) A newly certificated certificate holder does not employ any pilots who meet the minimum requirements of paragraph (g) of this section.

(ii) A certificate holder adds to its fleet a type airplane not before proven for use in its operations.

(iii) A certificate holder establishes a new domicile to which it assigns pilots who will be required to become qualified on the airplanes operated from that domicile.

4. Section 121.438 is added to subpart O to read as follows:

§ 121.438 Pilot operating limitations and pairing requirements.

(a) If the second in command has fewer than 100 hours of flight time as second in command in the type airplane being flown, and the pilot in command is not an appropriately qualified pilot check airman, the pilot in command must make all takeoffs and landings.

(1) At special airports designated by the Administrator or at special airports designated by the certificate holder; and

(2) In any of the following conditions:

(i) The prevailing visibility value in the latest weather report for the airport is at or below ¾ mile.

(ii) The runway visual range for the runway to be used is at or below 4000 feet.

(iii) The runway to be used has water, snow, slush or similar conditions that may adversely affect airplane performance.

(iv) The braking action on the runway to be used is reported to be less than "good".

(v) The crosswind component for the runway to be used is in excess of 15 knots.

(vi) Windshear is reported in the vicinity of the airport.

(vii) Any other condition in which the PIC determines it to be prudent to exercise the PIC's prerogative.

(b) No person may conduct operations under this part unless, for that type airplane, either the pilot in command or the second in command has at least 75 hours of line operating flight time, either as pilot in command or second in command. The Administrator may, upon application be the certificate holder, authorize deviations from the requirements of this paragraph by an appropriate amendment to the operations specifications in any of the following circumstances:

(1) A newly certificated certificate holder does not employ any pilots who meet the minimum requirements of this paragraph.

(2) An existing certificate holder adds to its fleet a type airplane not before proven for use in its operations.

(3) An existing certificate holder establishes a new domicile to which it assigns pilots who will be required to become qualified on the airplanes operated from that domicile.

Issued in Washington, DC on March 11, 1993.

Thomas C. Accardi,

Director, Flight Standards Service.

[FR Doc. 93-6247 Filed 3-22-93; 8:45 am]

BILLING CODE 4910-13-M

federal register

Tuesday
March 23, 1993

Part VI

Department of Transportation

Coast Guard

46 CFR Parts 31 and 32

Longitudinal Strength, Plating Thickness, and Periodic Gauging for Tank Vessels; Proposed Rule

DEPARTMENT OF TRANSPORTATION

Coast Guard

46 CFR Parts 31 and 32

[CGD 91-209]

RIN 2115-AD99

Requirements for Longitudinal Strength, Plating Thickness, and Periodic Gauging for Certain Tank Vessels

AGENCY: Coast Guard, DOT.

ACTION: Notice of proposed rulemaking.

SUMMARY: The Coast Guard proposes to establish minimum longitudinal strength and plate thickness standards for tank vessels that carry oil cargoes. The proposed regulations also would require the periodic gauging of these vessels after they reach the age of thirty years. The regulations are proposed in accordance with the Oil Pollution Act of 1990 (OPA 90). The purpose of the regulations is to reduce the likelihood of oil spills from structural failure of tank vessels, particularly in the case of unclassed tank barges.

DATES: Comments must be received by May 7, 1993.

ADDRESSES: Comments may be mailed to the Executive Secretary, Marine Safety Council (G-LRA/3406) (CGD 90-071a), U.S. Coast Guard Headquarters, 2100 Second Street SW., Washington, DC 20593-0001, or may be delivered to room 3406 at the same address between 8 a.m. and 3 p.m., Monday through Friday, except Federal holidays. The telephone number is (202) 267-1477. Comments on collection of information must be mailed also to the Office of Information and Regulatory Affairs, Office of Management and Budget, 725 17th Street NW., Washington, DC 20503, ATTN: Desk Officer, U.S. Coast Guard.

The Executive Secretary maintains the public docket for this rulemaking. Comments will become part of the docket and will be available for inspection and copying at room 3406, U.S. Coast Guard Headquarters.

FOR FURTHER INFORMATION CONTACT: Thomas Jordan, Project Manager, (202) 267-6751.

SUPPLEMENTARY INFORMATION:

Request for Comments

The Coast Guard encourages interested persons to participate in this rulemaking by submitting written data, views, or arguments. Persons submitting comments should include their names and addresses, identify both this rulemaking (CGD 91-209) and the specific section of the rulemaking to which each comment applies, and give the reason for the comment. Each person wanting acknowledgment of receipt of comments should enclose a stamped, self-addressed postcard or envelope.

The Coast Guard will consider all comments received during the comment period. It may change this proposal in view of the comments.

The Coast Guard plans no public hearing. Persons may request a public hearing by writing to the Marine Safety Council at the address listed under "**ADDRESSES.**" If the Coast Guard determines that the opportunity for oral presentations will aid this rulemaking, it will hold a public hearing at a time and place announced by a later notice in the **Federal Register**.

Drafting Information

The principal persons involved in drafting this document are Thomas Jordan, Project Manager, and Pamela M. Pelcovits, Project Counsel, Oil Pollution Act (OPA 90) Staff.

Statutory Basis and Purpose

Section 4109 of the Oil Pollution Act of 1990 (Pub. L. 101-380) (OPA 90), found as a statutory note following 46 U.S.C. 3703, requires the issuance of regulations on two matters related to the structural integrity of vessels that carry oil in bulk as cargo or cargo residue. These new regulations will: (1) Establish minimum standards for plating thickness, and (2) require periodic gauging of the plating thickness of all tank vessels over 30 years old operating on the navigable waters of the United States or the waters of the Exclusive Economic Zone.

The purpose of the regulations is to ensure adequate structural integrity of tank vessels throughout their service life. This will reduce the likelihood of a vessel breaking apart and spilling a substantial quantity of its cargo oil. The statute also requires the regulations to be consistent with generally recognized principles of international law. Additionally, the legislative history of the section stipulates that the Coast Guard should consider gaugings by classification societies, if equivalent to the Secretary's requirements, to be acceptable evidence of compliance.

In accordance with its authority under section 4109 of OPA 90 and its additional authority to establish standards for structural integrity under 46 U.S.C. 3306, the Coast Guard is proposing requirements in this notice of proposed rulemaking (NPRM) that address these matters.

Background and Discussion of Proposed Regulations

1. Legislative Origin of Section 4109

The specific incident that prompted section 4109 of OPA 90 was the structural failure of Tank Barge 565. While under tow in August 1988, this thirty-seven year old barge broke almost in half and spilled 4,000 barrels of petroleum into the Chesapeake Bay. The accident occurred two weeks after the required periodic drydock and internal inspections of the barge were conducted by the Coast Guard. The Coast Guard was unable to determine the proximate cause of the structural failure. However, the investigation report stated that the most probable cause was fatigue due to the age of the vessel and the type of construction. The report recommended establishing minimum plate thickness standards and periodic gauging requirements for older vessels. Two years later, Congress incorporated these two recommendations into section 4109 of OPA 90.

2. Oil Pollution Risk Group

Section 4109 of OPA 90 applies to all types of vessels that carry bulk oil cargoes; however, the group of vessels with the greatest risk of structural failure is unclassed tank barges, like Tank Barge 565. Currently, the gauging of unclassed barges is left to the discretion of owners/operators and the Coast Guard. Vessels classed by the American Bureau of Shipping (ABS), in contrast, are subject to class rules which require periodic gaugings and evaluation of the vessel's structural integrity.

3. Vessel Applicability

Section 4109 of OPA 90 applies to all vessels that carry oil in bulk as cargo, not just those inspected under 46 CFR subchapter D as tank vessels. In addition to subchapter D tankers and barges, oil also can be carried as bulk cargo aboard a variety of other non-tank vessels such as passenger ships, container and other cargo ships, certain fishing industry vessels and offshore supply vessels (OSVs). However, neither the language of OPA 90 nor its legislative history imply that Congress was concerned about vessels other than tank vessels. At this time, therefore, the Coast Guard is proposing regulations that will apply only to subchapter D tank vessels, including double-hulled ones. At a future date, the Coast Guard may expand the scope of the regulations to encompass the other types of vessels if necessary.

4. OPA 90 Definition of Oil

The definition of "oil" in OPA 90 includes oil of any type or in any form, including petroleum, fuel oil, sludge, oil refuse, and oil mixed with wastes (except dredged spoil). This definition also includes non-petroleum oils such as animal and vegetable oils. However, the Coast Guard is not proposing regulations that encompass all of these oils at this time. Under the International Convention for the Prevention of Pollution by Ships (MARPOL 73/78), to which the United States is a signatory, two different definitions of oil are used for purposes of preventing pollution of the marine environment: petroleum oils are defined in Annex I of MARPOL, and other oils (animal and vegetable) in Annex III. Presently, the international community is focusing on the Annex I (petroleum) oils. Therefore, in accordance with the statutory intent of section 4109 that the regulations be as consistent with generally recognized principles of international law, the Coast Guard has determined that it is appropriate that the proposed regulations of this rulemaking apply only to petroleum oil cargoes (listed in 46 CFR Table 30.25–1 as pollution category I cargoes). However, at a future date, the Coast Guard may extend the regulations to encompass other oils if necessary.

5. Classification Societies

The legislative history of section 4109 stipulates that gaugings by classification societies, if equivalent to the Coast Guard's requirements, should be considered as acceptable evidence of compliance. There are more than 40 classification societies worldwide, eleven of which are members of the International Association of Classification Societies (IACS). The American Bureau of Shipping (ABS) is one of the major classification societies, and its standards are recognized by the U.S. Coast Guard. Classification societies historically began as independent assessors of a vessel's seaworthiness for insurance purposes. Today, these societies are also used by vessel owners and many flag states to carry out the provisions of international maritime agreements, such as the International Convention on Load Lines (ICLL), Safety of Life at Sea Convention (SOLAS), and the International Convention for the Prevention of Pollution by Ships (MARPOL). The Coast Guard, for example, has authorized ABS to perform certain administrative functions on its behalf with respect to these international conventions.

Based on its own engineering calculations and experience, each classification society publishes rules for vessel scantling design requirements, including those for plating thicknesses. Even though there are broad international regulations for inspections, each society also has its own specific guidelines for conducting hull surveys, gauging plate thicknesses, and evaluating corrosion. The Coast Guard has never completed a comprehensive review of all classification societies' particular design and inspection criteria. Accordingly, it is not feasible at this time to establish the equivalency of all other classification societies to ABS.

6. Load Line Certificates

U.S. vessels engaged in domestic voyages by sea (between U.S. ports via offshore or coastwise routes), Great Lakes voyages, or international voyages, are required by law to have an appropriate load line certificate. The United States, as do many other nations, also requires any foreign vessel entering its waters to have a load line certificate. This may be an international load line certificate issued by its flag state under the International Convention on Load Lines (ICLL), or a U.S. "Form B" load line certificate issued to a foreign-flag vessel that does not have an ICLL certificate. In order to be issued a load line certificate, the vessel must undergo a survey of its material condition. This survey includes, among many other items, evaluation of its structural integrity.

For international load lines, Article 1 of the ICLL specifically requires that the flag nation assure itself of the structural integrity of the vessel to which it is issuing the certificate. Most flag nations, including the United States, have delegated this function to classification societies to perform on their behalf. To issue a load line certificate to a U.S. flag vessel, or a Form B load line certificate to a foreign vessel, 46 CFR 42.09–30 specifically requires that, where deemed necessary, the vessel's shell and deck plating be gauged to ascertain its thickness. Load line certificates are valid for a period of five years, and the vessel must be surveyed again before the certificate is reissued.

For these reasons, the proposed regulations allow the Coast Guard to accept an international load line certificate or a Form B load line certificate as satisfactory evidence that a foreign tank vessel meets the structural integrity standards of the proposed regulations. For U.S. flag vessels, the Coast Guard may similarly accept a current load line certificate.

It is important to note, however, that domestic tank vessels navigating inside the U.S. boundary lines, as well as rivers, waterways, and some bodies of water that are designated as lakes, bays and sounds (LBS), are not required to have load lines. Accordingly, most U.S. tank barges and a few small harbor tankers do not have load lines.

7. Design and Inspection Regulations

Current Federal regulations for U.S. tank vessels, found in 46 CFR subchapter D, require that the design and construction be at least equivalent to the requirements of the American Bureau of Shipping (ABS) or other recognized classification societies.

With respect to inspections, 46 CFR subchapter D provides that the current standards established by the ABS shall be accepted as standard by the Coast Guard (46 CFR 31.10–1(a)). Further, in the event a tank vessel is classed by the ABS or other recognized classification society, the approved plans and certificates of the society may be accepted by the Coast Guard as evidence of the structural efficiency of the hull (46 CFR 31.10–5(c)). At present, ABS is the only classification society recognized by the Coast Guard for these purposes. The proposed regulations therefore allow the Coast Guard to accept classification with ABS as satisfactory evidence that the vessel meets the structural integrity standards of the proposed regulations.

It is important to note, however, that although the Federal regulations require the vessels to be initially built to ABS standards, there is no requirement for the vessels to actually be ABS-classed once in service. For unclassed or non-load lined vessels, subsequent material condition surveys are performed solely by owners and Coast Guard inspectors in accordance with the regulations in 46 CFR subchapter D. Currently, guidance to inspectors in determining whether or not to require gauging of unclassed vessels is contained in the Marine Safety Manual (MSM). The guidance is general and inspectors exercise wide latitude in applying the provisions of the MSM, unless the local Officer in Charge of Marine Inspection (OCMI) has provided other direction. Section 4109 of OPA 90 essentially replaced this discretionary practice with mandatory gauging requirements.

8. International Regulations

Present international regulations concerning the structural integrity of tank vessels are only generally addressed in MARPOL regulations. In March, 1992, the Marine Environmental Protection Committee (MEPC) of the

United Nations' International Maritime Organization (IMO) adopted Regulation 13G to MARPOL Annex I, which calls for enhanced inspection standards for older tank vessels. Specific guidelines for conducting inspections, gauging surveys, and evaluating structural integrity of tank vessels are expected to be finalized at IMO's Marine Safety Committee meeting (MSC 62) in May, 1993 and MEPC 34 in July, 1993. They will then be presented to the IMO assembly for adoption as a Resolution in October, 1993, and would be effective immediately. However, the major classification societies have already announced their intention to apply the guidelines to their respective rules commencing in July, 1993.

9. Plating Thickness

As previously discussed, tank vessels must be designed in accordance with ABS Rules or equivalent standards acceptable to the U.S. Coast Guard. The ABS Rules include numerous equations for determining sizes and dimensions of all structural elements of a hull. For example, the ABS Rules for Building and Classing Steel Vessels, which would be used as a structural standard for tankships, has more than 30 equations for plate thickness alone, depending upon the type of vessel (e.g., cargo, tanker), hull design (e.g., single- or double-hulled), location of the plating (e.g., main deck, sheer strake, sides, bottom, keel, forebody, midships, superstructure, etc.), type of steel (e.g., ordinary strength or high-tensile strength), and other naval architectural considerations. The ABS design equations for plate thicknesses also include appropriate margins for corrosion losses, generally 20 or 25 percent of design thickness. When gauging surveys find steel thicknesses that are below the allowable limits, then the structural member must be replaced, or the lost strength otherwise restored.

Presently, the Coast Guard uses ABS standards and guidelines found in Navigation and Vessel Inspection Circular (NVIC) 7–68 when evaluating gauging data and determining whether or not steel must be renewed or replaced. The proposed regulation lists minimum plate thicknesses, as a percentage of original plate thicknesses, for different areas on the hull.

10. Section Modulus Standards

In addition to plating thickness, the appropriate engineering approach to ensure adequate structural integrity of older tank vessels is to establish minimum "section modulus" standards which the vessel must maintain throughout its service life. Section modulus is a calculated measure of the bending strength of a structure. It is applicable both to simple structures (such as a single beam) and to composite structures that are composed of many smaller structural members (such as plating stiffened by beams). For composite structures, section modulus takes into account the strength contributions of the individual members and determines the overall bending strength of the total structure. With respect to ship or barge hulls (which are composite structures), the important strength concerns are those caused by hogging/sagging stresses due to waves or loading/discharging operations. The composite longitudinal strength of the vessel must be sufficient to withstand these bending stresses, which are usually at a maximum in the midship region of the hull. All classification society rules require a minimum midship section modulus, which applies to the middle 40 percent-length of the hull. Their rules also require minimum section modulus for some individual structural members (such as girders, stiffeners, beams, etc.).

When newly-constructed to classification standards, all vessels are strong enough to withstand the normal bending stresses expected for their intended service. As the vessel ages, however, corrosion will erode the structure and reduce the section modulus. If unchecked, the hull will eventually buckle or break apart.

Section modulus standards must be included in the proposed regulations because the original design strength of a hull was based upon both hull plating and the internal structure (such as longitudinal bulkheads, girders, stiffeners). To focus on plating thickness alone will not guarantee adequate strength; the other structural members must also be assessed for their material condition. The International Association of Classification Societies (IACS) published a requirement that in-service midship section modulus for ocean-going tankers should be at least 90 percent of the original, as-built, section modulus; most classification societies use this standard as well.

The proposed regulations require a minimum midship section modulus of 90 percent of the original, as-built, section modulus.

11. Oversized Plating and Scantling Considerations

A tank vessel is built in accordance with ABS rules, which in turn are based upon the intended service. For example, ocean-going tankers are built in accordance with ABS Rules for Steel Vessels, ocean-going barges are built in accordance with ABS Rules for Steel Barges, and inland barges are built in accordance with ABS Rules for Steel Vessels for Service on Rivers and Intracoastal Waterways. These Rules are periodically revised as appropriate to reflect changes in construction techniques, improved methods of structural analysis, new corrosion protection technology, etc. Generally, scantlings for ocean-going service are much heavier than required for inland service, because of the more-corrosive and stressful ocean environment.

It is possible that an older tank vessel, originally built for more-severe service, could be transferred into inland service. Although its scantlings may be below allowable limits for ocean service, it may still have adequate strength for the more-sheltered inland service. Requiring these vessels to maintain their original as-built strength may not be appropriate and might penalize owners/operators unnecessarily. It is more appropriate to structurally evaluate these vessels against the strength requirements of their new service. In order to account for this situation, the proposed regulations allow owners/operators of vessels built to rules other than for service on Great Lakes, rivers and intracoastal waterways to request that their case be reviewed by the cognizant Officer in Charge of Marine Inspection (OCMI) for possible consideration with request to alternative standards.

12. Periodic Gauging

Although section 4109 of OPA 90 specifically mandates periodic gauging of vessels once they are more than 30 years old, classification societies actually begin requiring tank vessels to undergo two or three midship transverse (girth) belt gaugings at 20 years of age. These belt gaugings are for the purpose of evaluating the midship section modulus. Additional gaugings are also required on other longitudinal members to assess their individual strength condition. The classification societies require subsequent re-gaugings every five years thereafter.

Unclassed vessels, such as river barges and harbor tankers, are not subjected to explicit gauging requirements but are required (by 46 CFR subchapter D) to be drydocked at least once every five years, with gaugings generally done at the discretion of the USCG (using ABS, MSM, NVIC 7–68 and local OCMI policies for guidance).

The proposed regulations require that a tank vessel be gauged before its 31st year, and re-gauged every five years thereafter.

13. Implementation Period

The regulations are expected to go into effect in mid-1993. It is estimated that approximately 1,194 unclassed tank vessels will be more than 30 years old at that time. In order to minimize the economic impact on owners/operators, and to prevent the overloading of marine industry and Coast Guard resources, the periodic gauging requirements will be implemented over approximately three and a half years. By the end of the first 18 months that the regulations are in effect, all vessels more than 40 years old (estimated to be 441 vessels) will have to undergo their first gauging survey. The next 12 months will capture all vessels more than 35 years old (estimated to be 376 vessels), and the last 12 months will capture all vessels more than 30 years old (estimated to be 408 vessels).

The proposed minimum thickness standards are already used by the Coast Guard in evaluating the structural integrity of unclassed tank vessels. Therefore, because these standards are already in practice, there is no need to delay implementation of these requirements.

Regulatory Evaluation

This proposal is not major under Executive Order 12291 and not significant under the Department of Transportation Regulatory Policies and Procedures (44 FR 11040; February 26, 1979). A draft Regulatory Evaluation (RE) for this rulemaking is available in the docket (CGD 91–209) for inspection or copying, as indicated in the "ADDRESSES" section of this preamble.

A copy of the draft RE also has been placed in a special file (CGD 91–207) established to facilitate review of the programmatic Regulatory Impact Analysis for titles IV and V of OPA 90. Any public comments received will also be placed in that file.

Summary of Draft Regulatory Evaluation (RE)

There are already regulations in effect which require tank vessels to be drydocked at least once every five years, and to undergo general plate gauging to the satisfaction of the local Coast Guard OCMI. The scope and cost of these general gauging surveys can vary significantly from vessel to vessel, depending upon how well it has been maintained and how satisfied the OCMI is with its material condition. The proposed regulations will impose a very specific gauging requirement in addition to the general gaugings already required. The draft RE analyzes the new gauging costs.

The proposed regulations will most significantly impact owners/operators of unclassed tank barges and small harbor tankers. As of June, 1992, the age profile of the present unclassed tank vessel fleet (2,643 barges and 37 tankers) shows that 45 percent of the fleet is more than 30 years old, but only 9 percent is more than 50 years old. The draft RE therefore assumes that the service life of an unclassed tank vessel is 50 years. It is noted that no unclassed harbor tankers have been built since 1979, which suggests that, as these tankers are retired from service, industry is replacing them with tank barges.

The existing unclassed tank vessel fleet includes 232 vessels (9 percent) that are already more than 50 years old; by 1994, that number is expected to be 309. It is assumed that owners/operators of these older vessels will retire them from service rather than incur the gauging survey costs. The removal of these barges, however, is not expected to disrupt the overall supply/demand balance of the oil transportation market for three reasons. First, there is presently an oversupply of tank barges. Second, since the passage of OPA 90 there has been a resurgence of new tank barge construction orders; it is expected that industry will match the pace of replacement construction to meet market demand. Third, the retired barges are not necessarily scrapped; owners/operators must put them into lay-up until market rates offset reactivation costs (this is already common practice within the industry).

It is assumed that the original midship section drawing for these older tank vessels will no longer be available; therefore, a vessel's first gauging survey will require additional efforts to "reverse-engineer" the "as-built" drawing and section modulus. This will be a one-time-only cost, however, because the results will be available for subsequent surveys. Accordingly, the first gauging survey is estimated to cost $3,990 and the subsequent surveys $2,990. Commercial business loans are not generally available for these purposes because there is usually no suitable collateral or other equity available to secure a loan. Therefore, for most companies, the gauging survey costs will be an out-of-pocket capital expenditure that will come from current operating revenues and be recovered over the subsequent five years before the vessel must be regauged again. The draft RE calculates that a capital recovery rate of $3.33 per day is required in order to amortize the $3,990 gauging survey cost over five years, assuming a tank vessel work year of 292 days (i.e., 20% idle or out-of-service time per calendar year).

The section modulus and plate thickness standards are already in practice; therefore, they do not represent any new costs to industry. It is recognized that some owners/operators may have been maintaining their vessels below current standards (until discovered by Coast Guard), and will now have to expend additional funds to bring their vessels up to the required levels. However, the Coast Guard views this potential expenditure as deferred maintenance costs that properly should have been expended previously.

Over the 22-year period from mid-1993 (when the regulations are expected to go into effect) to 2015 (when all existing tank vessels must be double-hulled or removed from service), an estimated total of 4,446 gaugings will be accomplished. This estimate is based on the current fleet size and age profile, and certain assumptions regarding vessel retirement rates. Discounted at a rate of 7 percent adjusted to 1992 dollars, the total present value cost of the program is estimated to be $8.6 million, of which $4.6 million (53 percent) will occur in the first five years. The costs of the program are relatively high during the first five years because of the large number of existing vessels that will have to comply within that period. Thereafter, the annual cost will decline steadily as these existing tank vessels are retired and replaced by new ones that will not require gauging until they are 30 years old.

The effect of the proposed regulation will be to prevent catastrophic hull failures which would otherwise result in the spillage of several hundred tons of oil into the marine environment. However, this type of casualty is infrequent. Although tank barges have broken apart in the past, the failures are most often associated with improper loading/discharge operations, which can seriously overstress even a sound hull. The sole casualty which the Coast Guard has so far identified as clearly attributable to inadequate longitudinal strength and poor maintenance is the original Tank Barge 565 failure that prompted section 4109 of OPA 90. Accordingly, there is no statistical basis for projecting how much oil might otherwise be spilled without the proposed regulations. Therefore, the draft RE assumes that at least one such casualty will be prevented at some time over the 22-year program period, averting a spill of 4,000 barrels.

The monetary benefits of the proposed regulations include avoided clean-up costs, third-party compensation (lost earnings to

fishermen, etc.) and natural resource damages. Historically, these costs have varied enormously from spill to spill because of the great range of factors affecting the impact of oil spills, such as type of product, environment, time of year, location, weather conditions. Accordingly, it is not possible to establish a definitive monetized (dollar) benefit value for "unspilled" oil. Therefore, the draft RE does not perform benefit calculations using dollar amounts. Instead, it uses the "unspilled oil" quantity, discounted at 7 percent back to 1992 barrels. If the averted 4,000-barrel spill were to occur in the first full program year (1994), the discounted quantity would be 3,494 barrels. If it were to occur in the last program year (2015), the discounted quantity would be 844 barrels.

Therefore, the draft RE determines that the cost of the proposed regulations ranges from $2,465 to $10,208 per barrel of unspilled oil.

Although it is not statistically possible to predict when the "averted spill" is most likely to occur, the draft RE notes that the projected age profile of the fleet shows that the oldest of the existing vessels will be removed from service relatively early in the program period (more than 900 vessels by 1999). This age group represents the most at-risk group of vessels; hence, it is more likely that the benefit would occur sooner than later. Furthermore, the draft RE assumes that only one casualty will be averted, but it is possible that the regulations could avert several catastrophic failures, thereby reducing the benefit costs dramatically.

The regulatory burden on the Coast Guard will be the review and approval of the gauging reports. This is estimated to be $192 (6 man-hours) per report.

Small Entities

Under the Regulatory Flexibility Act (5 U.S.C. 601 *et seq.*), the Coast Guard must consider whether this proposal will have a significant impact on a substantial number of small entities. "Small entities" include independently owned and operated businesses that are not dominant in their field and that otherwise qualify as "small business concerns" under section 3 of the Small Business Act (5 U.S.C. 632).

Summary of Small Entity Impact

There are an estimated 1,163, unclassed tank barges and 31 unclassed harbor tankers in service that are already more than 30 years old. Because of this, and because the tank barge industry is largely comprised of one- and two-barge companies, the proposed regulations will impact several hundred small companies over the first five years that they are in effect. The specific impact on any particular company will depend upon the age profile of its fleet. Owners of vessels more than 40 years old will be immediately affected, and owners of barges more than 30 years old will be affected within three and a half years of the date when the proposed regulations are expected to go into effect. If a company owns several older vessels that must be gauged in the same year, and operating revenues cannot cover the gauging survey costs, then it may have to temporarily remove some vessels from service until funds are available.

This economic impact is unavoidable: The statute clearly targets older vessels. The Coast Guard has attempted to minimize the impact by implementing the periodic gauging regulations over a three and a half year period. Further, the five-year re-gauging interval is intended to coincide with the periodic drydock inspections already required by regulation, thus, preventing additional time out of service.

If a company affected by the proposed regulations thinks it qualifies as a small entity, and that the proposed regulations will have a more-adverse economic impact than discussed above, then it should submit a comment (see "ADDRESSES") explaining why it qualifies as a small entity, and in what way and to what degree the proposed regulations will affect it.

Collection of Information

Under the Paperwork Reduction Act (44 U.S.C. 3051 *et seq.*), the Office of Management and Budget (OMB) reviews each proposed rule that contains a collection of information requirement to determine whether the practical value of the information is worth the burden imposed by its collection. Collection of information requirements include reporting, recordkeeping, notification, and other similar requirements.

This proposal contains collection of information requirements in the following section: 46 CFR 31.10–21a. The following particulars apply:

DOT No.: 2115
OMB Control No.: 2115–XXXX
Administration: U.S. Coast Guard.
Title: Requirements for Longitudinal Strength, Plating Thickness, and Periodic Gauging for Certain Tank Vessels
Need for Information: The proposed regulations are intended to ensure the structural integrity of older tank vessels by establishing minimum standards for plating thickness and requiring periodic gauging of the plating thickness of tank vessels over 30 years old. The collected information (survey data and associated engineering analysis) is needed in conjunction with the periodic gauging requirement.
Proposed Use: The Coast Guard will use the collected information to verify the structural integrity and regulatory compliance of older tank vessels.
Frequency: First time when a tank vessel is 30 years of age, then every five years thereafter.
Burden Estimate: The annual average burden on industry is 23,683 hours per year for the first three years.
Respondents: Owners/operators of unclassed tank vessels more than 30 years old (estimated to be 1,225 vessels in first three years).
Average Burden Hours Per Respondent: 58 hrs per vessel for the first survey, as follows:
16 hrs—Gauging survey (technician)
40 Hrs—Data calculations and analysis, report preparation (professional engineer)
1 hr—Review by owner/operator (manager)
1 hr—Processing by owner/operator (secretary)
Form(s): None

The Coast Guard has submitted the requirements to OMB for review under section 3504(h) of the Paperwork Reduction Act. Persons submitting comments on the requirements should submit their comments both to OMB and to the Coast Guard where indicated under "ADDRESSES."

Federalism

The Coast Guard has analyzed this proposal in accordance with the principles and criteria contained in Executive Order 12612 and has determined that this proposal does not have sufficient federalism implications to warrant the preparation of a Federalism Assessment.

This NPRM proposes standards for structural strength and requirements for the periodic gauging of certain cargo tank vessels. The authority to regulate tank vessel design, construction and inspection is delegated to the Coast Guard by the Secretary of Transportation, whose authority is committed by statute. Because tank vessels move between U.S. ports in the national marketplace, and between U.S. and foreign ports in the international marketplace, standards for structural strength, and periodic confirmation thereof, are a matter for which regulations should be of national scope to avoid unreasonably burdensome variances. The Coast Guard intends that these regulations preempt State action addressing the same subject matter.

Environment

The Coast Guard has considered the environmental impact of this proposal under COMDTINST M16475.1B. A draft Environmental Assessment (EA) is available in the docket for copying and inspection as indicated in the "ADDRESSES" section of this preamble. The draft EA discusses and compares the proposed action and alternatives, subsequent expected environmental impacts, and overall need for the action.

Summary of Draft Environmental Assessment (EA)

Section 4109 of OPA 90 is intended to protect the environment by assuring adequate structural integrity of tank vessels throughout their service lives, thereby preventing catastrophic hull failures and resultant oil spillage. Several alternatives towards achieving this end were considered and rejected:

1. Take no action

This alternative would rely on improved self-vigilance by owners and operators, perhaps motivated by market forces (for example, shippers being more selective about the material condition of vessels that they hire, and willing to pay premium rates for better vessels) or regulatory pressure (for example, the threat of unlimited liability under other provisions of OPA 90). This approach was rejected, however, because: (1) The statue explicitly requires issuance of regulations; (2) it would put more-responsible owners/operators at a competitive disadvantage against less-responsible ones who did not expend the same efforts in maintenance; and (3) left to their own judgment, owners/operators are likely to implement differing standards, resulting in uneven practices and undermining the overall effectiveness of the environmental protection measures. Clearly-defined standards that are equally imposed on all vessels are considered the most effective approach towards protecting the environment and maintaining fair competition within the industry.

2. Regulate all vessels carrying all oils

This option would exercise the full scope of the statute by requiring all vessels, including non-tank vessels, that carry all oils, including animal and vegetable oils, to comply with the new regulations. The Coast Guard decided to limit the proposed regulations to only subchapter D tank vessels carrying MARPOL Annex I (petroleum) oils because: (1) The international community is presently focusing on petroleum oil pollution by tank vessels; (2) the volume of animal and vegetable oil movements is extremely small compared to petroleum oil movements, no significant spillage has occurred in the past, nor are such spills as potentially devastating to the environment. Similarly, non-tank vessels are not causing significant pollution. Therefore, including these oils and vessels imposes costs without commensurate benefits; (3) neither OPA 90 nor the legislative history of section 4109 imply that Congress was concerned about vessels other than tank vessels or oils other than petroleum oils; and (4) this rulemaking does not preclude the Coast Guard from extending the regulations to encompass these vessels or oil if warranted by future events.

3. Require classification of all tank vessels

This approach would assure a high level of structural integrity. However, it was rejected because classification imposes other requirements on a vessel that exceed the statutory concerns of section 4109. Furthermore, the costs of bringing an existing, unclassed vessel into class are much greater than the costs of the proposed regulations, while not providing any greater environmental protection.

4. Require load line assignments for all tank vessels, regardless of routes

This would ensure that the structural integrity of the vessel was periodically evaluated. However, it was rejected for the same reasons as the classification alternative: load line requirements exceed the mandate of section 4109, are more expensive than the proposed regulations, but do not provide any greater environmental benefit.

As previously discussed, structural hull failures like that which occurred to Tank Barge 565 are infrequent. The draft EA has no statistical basis for projecting how much oil spillage will be prevented by the proposed regulations. Therefore, although some reduction in environmental damage will probably accrue, the actual benefits cannot be reasonably predicted beyond making an assumption of effectiveness. The draft EA assumes that the regulations will prevent at least one catastrophic hull failure, averting a spill of 4,000 barrels. (This quantity is the approximate capacity of a set of port/starboard cargo tanks on a typical barge.)

Although this averted spillage may be significant to a local environment, generally, the proposed regulations are not expected to result in significant impact on the quality of the human environment. Therefore, the Coast Guard expects to issue a Finding of No Significant Impact.

List of Subjects

46 CFR Part 31

Cargo vessels, Marine safety, Reporting and recordkeeping requirements.

46 CFR Part 32

Cargo vessels, Fire protection, Marine safety, Navigation (water), Occupational safety and health, Reporting and recordkeeping requirements, Seamen.

For the reasons discussed in the preamble, the Coast Guard proposes to amend 46 CFR parts 31 and 32 as follows:

SUBCHAPTER D—TANK VESSELS

PART 31—INSPECTION AND CERTIFICATION

1. The authority citation for 46 CFR part 31 is revised to read as follows:

Authority: 33 U.S.C. 1321(j); 46 U.S.C. 3306, 3703, 5115, 8105; 49 U.S.C. app. 1804; E.O. 12234, 45 FR 58801, 3 CFR, 1980 Comp., p. 277; E.O. 11735, 38 FR 21243, 3 CFR, 1971–1975 Comp., p. 793; 49 CFR 1.46; sec. 4109, Pub. L. 101–380, 104 Stat. 515.

2. Section 31.10–21a is added as follows:

§ 31.10–21a Periodic gauging of tank vessels more than 30 years old that carry certain oil cargoes—TB/ALL.

(a) All tank vessels carrying a pollution category I oil cargo listed in 46 CFR Table 30.25–1 must undergo periodic gauging surveys as follows:

(1) Tank vessels originally delivered on or after January 1, 1967 must undergo the gauging survey in paragraph (b) of this section before their 31st year, and be re-gauged at intervals not exceeding five years thereafter.

(2) Tank vessels originally delivered between January 1, 1961 and December 31, 1966 must undergo the gauging survey in paragraph (b) of this section no later than January 1, 1997, and be re-gauged at intervals not exceeding five years thereafter.

(3) Tank vessels originally delivered between January 1, 1955 and December 31, 1960 must undergo the gauging survey in paragraph (b) of this section no later than January 1, 1996, and be re-gauged at intervals not exceeding five years thereafter.

(4) Tank vessels originally delivered before January 1, 1955 must undergo the gauging survey in paragraph (b) of this section no later than January 1, 1995, and be re-gauged at intervals not exceeding five years thereafter.

(b) The gauging survey shall comprise at least three transverse (girth) belts of deck, bottom, side, inner hull, trunk and longitudinal bulkhead plating within

the 40-percent midship length, together with attached longitudinal members. The number and specific locations of the gauging points shall be to the satisfaction of the OCMI.

(c) Except as provided in paragraph (e) of this section, within 60 days of the vessel's required compliance date the owner/operator shall submit to the OCMI that issued the vessel's current Certificate of Inspection:

(1) The gauging survey results, and

(2) An engineering analysis, signed by a registered Professional Engineer licensed by one of the 50 U.S. States or the District of Columbia, certifying the vessel's compliance with respect to the minimum section modulus and plate thickness requirements of subpart 32.59 of this chapter, or proposing structural repairs and/or modifications that will bring the vessel up to the required strength standards.

(d) The vessel owner/operator shall keep a permanent copy of the Coast Guard-approved gauging report available for inspection by the OCMI.

(e) Instead of the submittals required by paragraph (c) of this section, current classification with the American Bureau of Shipping, or a load line certificate issued in accordance with the International Convention on Load Lines, the International Load Line Act or the Coastwise Load Line Act, may be submitted as evidence of compliance with the requirements of this section.

PART 32—SPECIAL EQUIPMENT, MACHINERY, AND HULL REQUIREMENTS

3. The authority citation for 46 CFR part 32 is revised to read as follows:

Authority: 46 U.S.C. 3306, 3703; E.O. 12234, 45 FR 58801, 3 CFR, 1980 Comp., p. 277; 49 CFR 1.46; sec. 4109, Pub. L. 101–380, 104 Stat. 515.

4. Subpart 32.59 is added consisting of § 32.59–1 as follows:

Subpart 32.59—Minimum Longitudinal Strength and Plate Thickness Requirements for Unclassed Tank Vessels That Carry Certain Oil Cargoes—TB/ALL

§ 32.59–1 Minimum longitudinal strength and plate thickness requirements—TB/ALL.

(a) Except as provided in paragraph (b) of this section, all unclassed tank vessels carrying a pollution category I oil cargo listed in 46 CFR Table 30.25–1 must meet the longitudinal strength and plate thickness requirements as follows:

(1) The minimum midship section modulus must be at least 90 percent of the vessel's original, as-built midship section modulus;

(2) Within the 40-percent midship length, the average flange and web thicknesses of each structural stiffener shall be at least 85 percent of original thickness unless a buckling analysis demonstrates that lesser thicknesses can be safely tolerated. However, the average minimum thickness for any stiffener web or flange shall never be less than 80 percent of original thickness; and

(3) Within the 40-percent midship length, the minimum plate thickness for individual longitudinal strength plates must be as follows:

(i) Weather deck: 75 percent of original thickness

(ii) Trunk/hatch: 70 percent of original thickness

(iii) Sheer strake: 75 percent of original thickness

(iv) Outer sideshell: 75 percent of original thickness

(v) Inner sideshell: 75 percent of original thickness

(vi) Outer bottom: 75 percent of original thickness

(vii) Inner bottom: 70 percent of original thickness

(viii) Keel: 75 percent of original thickness

(ix) Bulkheads: 75 percent of original thickness

(b) Where a vessel was originally built to heavier plating and section modulus standards than required for its present service, it may be structurally evaluated against the strength requirements of its present service. Owners or operators of a vessel may request the cognizant OCMI to review the current condition of the vessel and its intended service for possible consideration with respect to alternative standards.

Dated: March 16, 1993.

A.E. Henn,

Rear Admiral, U.S. Coast Guard, Chief, Office of Marine Safety, Security and Environmental Protection.

[FR Doc. 93–6497 Filed 3–22–93; 8:45 am]

BILLING CODE 4910–14–M

federal register

Tuesday
March 23, 1993

Part VII

Department of Education

34 CFR Part 232

Drug-Free Schools and Communities Emergency Grants; Proposed Rule

DEPARTMENT OF EDUCATION

34 CFR Part 232

RIN 1810-AA65

Drug-Free Schools and Communities Emergency Grants Program

AGENCY: Department of Education.

ACTION: Notice of proposed rulemaking.

SUMMARY: The Secretary proposes to revise the regulations governing the Emergency Grants Program in 34 CFR part 232 to add projects that combat drug and alcohol abuse by students in the most troubled areas of a local educational agency (LEA) to the list of types of projects the Secretary may assist; to clarify eligibility requirements; and to ensure that applicants are able to demonstrate the basis of their eligibility to receive a grant.

DATES: Comments must be received on or before May 7, 1993.

ADDRESSES: All comments concerning these proposed regulations should be addressed to Madeline Bosma, U.S. Department of Education, 400 Maryland Avenue, SW., room 2123, FOB 6, Washington, DC 20202-6439.

A copy of any comments that concern information collection requirements should also be sent to the Office of Management and Budget at the address listed in the Paperwork Reduction Act section of this preamble.

FOR FURTHER INFORMATION CONTACT: Madeline Bosma. Telephone: (202) 401-1258. Deaf and hearing impaired individuals may call the Federal Dual Party Relay Service at 1-800-877-8339 (in the Washington, DC 202 area code, telephone 708-9300) between 8 a.m. and 7 p.m., Eastern time.

SUPPLEMENTARY INFORMATION: Part 232 governs the administration of the Drug-Free Schools and Communities Emergency Grants Program. The proposed changes to part 232 would add to the list of the types of projects the Secretary may assist (in § 232.5) comprehensive programs to combat drug and alcohol abuse by students in the most troubled areas of an LEA. The Secretary is especially interested in receiving public comment on the validity and feasibility of using the following factors to assist applicants in identifying the most troubled areas of an LEA for purposes of implementing § 232.5(e) of the proposed regulations. These factors are—

(1) Open-air drug markets;
(2) High unemployment;
(3) High homicide rates;
(4) Overcrowded housing conditions;
(5) Boarded-up businesses and dwellings; or
(6) Limited access to basic goods, health, and other social services.

The Secretary intends to incorporate one or more of these factors, or other factors received in public comment, into a list of factors that applicants for grants under this program may use to identify the most troubled areas of an LEA.

The Secretary is also particularly interested in receiving public comment on other factors that applicants could use to identify troubled areas. Because the Secretary wants to ensure that these factors are valid measures, commenters should supply supporting documentation, including citations of research findings and correlations between drug use and suggested factors, with their comments. To the extent that commenters suggest alternative factors as indicators of the most troubled areas of an LEA, the Secretary is interested in receiving comments on those alternative factors. These comments will be available for public inspection as noted in the **INVITATION TO COMMENT** section of this NPRM to allow the public the opportunity to review and comment on possible alternative factors.

The proposed changes to part 232 would also (1) clarify the emergency grants eligibility requirements by including statutory language regarding the conditions of eligibility based on section 1006 of chapter 1 of title I of the Elementary and Secondary Education Act; and (2) require that applicants include in their applications a statement of how they meet these requirements. These changes are needed to ensure that applicants understand and demonstrate their eligibility to receive an emergency grant.

The Drug-Free Schools and Communities Emergency Grants Program supports recipients in their efforts to attain drug-free schools under National Education Goal Six.

Executive Order 12291

These proposed regulations have been reviewed in accordance with Executive Order 12291. They are not classified as major because they do not meet the criteria for major regulations established in the order.

Regulatory Flexibility Act Certification

The Secretary certifies that these proposed regulations would not have a significant economic impact on a substantial number of small entities.

The proposed regulations do not impose burdensome requirements on applications or grantees. They establish requirements for participation in the program and would not have a significant economic impact on entities participating in the program.

Paperwork Reduction Act of 1980

Section 232.4 contains information collection requirements. As required by the Paperwork Reduction Act of 1980, the Department of Education will submit a copy of this section to the Office of Management and Budget (OMB) for its review. (44 U.S.C. 3504(h))

Annual public reporting and recordkeeping burden for this collection of information is estimated to average one-half hour per response for 200 respondents, including the time for reviewing instructions, searching existing data sources, gathering and maintaining the data needed, and completing and reviewing the collection of information.

Organizations and individuals desiring to submit comments on the information collection requirements should direct them to the Office of Information and Regulatory Affairs, OMB, room 3002, New Executive Office Building, Washington, DC 20503; Attention: Daniel J. Chenok.

Intergovernmental Review

This program is subject to the requirements of Executive Order 12372 and the regulations in 34 CFR part 79. The objective of the Executive order is to foster an intergovernmental partnership and a strengthened federalism by relying on processes developed by State and local governments for coordination and review of proposed Federal financial assistance.

In accordance with the order, this document is intended to provide early notification of the Department's specific plans and actions for this program.

INVITATION TO COMMENT: Interested persons are invited to submit comments and recommendations regarding any of the provisions in these proposed regulations.

All comments submitted in response to these proposed regulations will be available for public inspection during and after the comment period in room 2123, FOB #6, 400 Maryland Avenue, SW., Washington, DC, between the hours of 8:30 a.m. and 4 p.m., Monday through Friday of each week except Federal holidays.

To assist the Department in complying with the specific requirements of Executive Order 12291 and the Paperwork Reduction Act of 1980 and their overall requirements of reducing the regulatory burden, the Secretary also invites comments on whether there may be further opportunities to reduce any regulatory burdens found in these proposed regulations.

List of Subjects in 34 CFR Part 232

Drug abuse, Drug-free schools and communities, Education department, Elementary and secondary education, Grant programs—Education, Local educational agencies, Reporting and recordkeeping.

Dated: March 2, 1993.

Richard W. Riley,

Department of Education.

(Catalog of Federal Domestic Assistance Number 84.233A Emergency Grants Program)

The Secretary proposes to amend part 232 of title 34 of the Code of Federal Regulations as follows:

PART 232—DRUG-FREE SCHOOLS AND COMMUNITIES EMERGENCY GRANTS PROGRAM

1. The authority citation for part 232 continues to read as follows:

Authority: 20 U.S.C. 3216, unless otherwise noted.

2. Section 232.2 is revised to read as follows:

§ 232.2 What parties are eligible for a grant under this program?

A local educational agency is eligible to receive a grant if it—

(a)(1) Receives, or is eligible to receive, assistance under section 1006 of chapter 1 of title I of the Elementary and Secondary Education Act of 1965 (20 U.S.C. 2712); or

(2) Meets the criteria of clauses (i) and (ii) of section 1006 (a)(1)(A) of chapter 1 of title I of the Elementary and Secondary Education Act of 1965 (20 U.S.C. 2712); and

(b) Serves an area—

(1) In which there are a large number or a high percentage of—

(i) Arrests for, or while under the influence of, drugs or alcohol; or

(ii) Convictions of youth for drug- or alcohol-related crimes;

(2) In which there are a large number or a high percentage of referrals of youths to drug and alcohol abuse treatment and rehabilitation programs; and

(3) That has a significant drug and alcohol abuse problem.

(Authority: 20 U.S.C. 3216)

3. Section 232.4 is amended by redesignating paragraphs (a) and (b) as paragraphs (b) and (c), respectively, and by adding a new paragraph (a) to read as follows:

§ 232.4 What must an application include?

* * * * *

(a) A statement of the basis for the applicant's eligibility under § 232.2(a)(1) or (2);

* * * * *

(Authority: 20 U.S.C. 3216)

4. Section 232.5 is amended by removing the word "or" at the end of paragraph (c), by removing the period at the end of paragraph (d) and adding in its place "; or", and by adding a new paragraph (e) to read as follows:

§ 232.5 What types of projects may the Secretary assist under this program?

* * * * *

(e) Implement comprehensive programs to combat drug and alcohol abuse by students in the most troubled areas of a local educational agency.

* * * * *

[FR Doc. 93-6564 Filed 3-22-93; 8:45 am]

BILLING CODE 4000-01-U

Reader Aids

Federal Register

Vol. 58, No. 54

Tuesday, March 23, 1993

INFORMATION AND ASSISTANCE

Federal Register

Index, finding aids & general information	202-523-5227
Public inspection desk	523-5215
Corrections to published documents	523-5237
Document drafting information	523-3187
Machine readable documents	523-3447

Code of Federal Regulations

Index, finding aids & general information	523-5227
Printing schedules	523-3419

Laws

Public Laws Update Service (numbers, dates, etc.)	523-6641
Additional information	523-5230

Presidential Documents

Executive orders and proclamations	523-5230
Public Papers of the Presidents	523-5230
Weekly Compilation of Presidential Documents	523-5230

The United States Government Manual

General information	523-5230

Other Services

Data base and machine readable specifications	523-3447
Electronic Bulletin Board	275-1538, 275-0920
Guide to Record Retention Requirements	523-3187
Legal staff	523-4534
Privacy Act Compilation	523-3187
Public Laws Update Service (PLUS)	523-6641
TDD for the hearing impaired	523-5229

FEDERAL REGISTER PAGES AND DATES, MARCH

11783–11950.....1
11951–12144.....2
12145–12328.....3
12329–12536.....4
12537–12900.....5
12901–12996.....8
12997–13188.....9
13189–13400.....10
13401–13528.....11
13529–13694.....12
13695–14144.....15
14145–14302.....16
14303–14494.....17
14495–15070.....18
15071–15260.....19
15261–15414.....22
15415–15750.....23

CFR PARTS AFFECTED DURING MARCH

At the end of each month, the Office of the Federal Register publishes separately a List of CFR Sections Affected (LSA), which lists parts and sections affected by documents published since the revision date of each title.

3 CFR

Executive Orders:
12154 (Amended by EO 12841).....13529
12193 (See EO 12840).....13401
12295 (See EO 12840).....13401
12351 (See EO 12840).....13401
12409 (See EO 12840).....13401
12463 (See EO 12840).....13401
12506 (See EO 12840).....13401
12554 (See EO 12840).....13401
12587 (See EO 12840).....13401
12629 (See EO 12840).....13401
12670 (See EO 12840).....13401
12706 (See EO 12840).....13401
12753 (See EO 12840).....13401
12791 (Superseded by EO 12840).....13401
12800 (See DOL final rule of March 15).....15402
12808 (See final rule of Jan. 14).....13199
12810 (See final rule of Jan. 14).....13199
12831 (See final rule of Jan. 14).....13199
12833 (See EO 12841).....13529
12836 (See final rule of Mar. 2).....12140
12836 (See DOL final rule of March 15).....15402
12840.....13401
12841.....13529

Proclamations:
6491 (Revoked by Proc. 6534).....13189
6531.....11951
6532.....13185
6533.....13187
6534.....13189
6535.....15441
6536.....15413

Administrative Orders:
Presidential Determinations:
No. 93-15 of February 27, 1993.....13183
Memorandums:
March 4, 1993.....14303

5 CFR

Ch. 14.....13695
307.....12145
432.....13191
532.....12146, 13193, 13194, 15415
752.....13191
870.....11953
871.....11953
872.....11953
873.....11953

Proposed Rules:
317.....11988
412.....11988

7 CFR

2.....11954, 11955
321.....11957
354.....14395
400.....13531
702.....11783
723.....11959, 11960
729.....11962
987.....13695
993.....13697
1106.....14307
1260.....12997
1413.....12329, 12332, 15416
1421.....14495
1427.....12332, 15261
1434.....14495
1464.....11960
1493.....11786, 13684
1703.....13194
1901.....12632
1943.....15071
1944.....12632, 14509
1951.....15071, 15417
1980.....15071
4284.....12632

Proposed Rules:
29.....13130
52.....13130
55.....13130
58.....13130
59.....13130
61.....13130
68.....14174
70.....13130
90–159.....13130
180.....13130
1001.....12634
1002.....12634
1004.....12634
1005.....12634
1006.....12634
1007.....12634

1011....12634
1012....12634
1013....12634
1030....12634
1032....12634
1033....12634
1036....12634
1040....12634
1044....12634
1046....12634
1049....12634
1050....12634
1064....12634
1065....12634
1068....12634
1075....12634
1076....12634
1079....12634
1093....12634
1094....12634
1096....12634
1097....12634
1098....12634, 14344
1099....12634
1106....12634
1108....12634
1124....12634
1126....12634
1131....12634
1134....12634
1135....12634
1137....12634
1138....12634
1139....12634
1421....12338
1717....12552
3515....11910

8 CFR

208....12146, 14145
209....12146, 14145
274a....12146, 14145

9 CFR

94....13698
Proposed Rules:
94....14174
113....12187
391....14177
92....15292
113....15301
130....15292

10 CFR

2....14308
73....13699
110....11886, 12999
440....12514
Proposed Rules:
20....14178
50....12339
50....15303
60....12342
110....14344
810....13427, 15441
1706....13684

11 CFR

110....14310
201....14510
Proposed Rules:
102....12189
104....14530
110....12189

12 CFR

217....15076
225....15076
230....15076
325....12149
563....14510, 15082
567....15085
601....12333
614....11792
203....13403
Proposed Rules:
346....11992
611....15099
701....11801
707....11801
711....12910
740....11801
900....13565

13 CFR

102....14145, 14147
121....12334

14 CFR

25....12537
35....15262
39....12152, 12153, 12155, 13430, 13700, 13701, 14181, 14182, 14184, 14185, 14187, 14189, 14311, 14513, 14515
71....11886, 12128, 12157, 13006, 13703, 13704, 14190, 14517, 15117, 15118, 15264
93....12128
97....15265, 15266, 15268, 15270
121....12158
Proposed Rules:
21....13216
25....12563, 13216
39....11996, 11997, 11999, 12002, 12004, 12190, 12192, 12194, 12195, 12347, 12349, 13430, 13711, 13713, 15114, 15116, 15305, 15309, 15441, 15444, 15445, 15448, 15450
71....11801, 11802, 11803, 12128, 11886, 12197, 12566, 12567, 13715, 15117, 15118
121....15730
221....12350
389....12350

15 CFR

Proposed Rules:
806....12912
944....15271

16 CFR

305....15086
1030....12335
Proposed Rules:
305....12818
308....13370

17 CFR

1....12988
200....11792, 14628, 14848, 14999
201....14628
202....14628, 14999, 15009
210....14628
228....14628
229....14628, 14848
230....14628, 14848
232....14628
239....14628, 14848
240....14628, 14848
249....14628, 14848
250....14999
259....14999
260....14628, 15009
269....14628
270....14848
274....14848
Proposed Rules:
1....13565, 14348
17....13716
18....13716
155....13025, 13684
200....11804
240....11804, 11806
250....13719
259....13719

18 CFR

2....15418
154....15418
157....15418
284....15087, 15418
365....11886
375....15418
380....15418
381....11886
Proposed Rules:
284....14530, 15311

19 CFR

4....12538, 13195

20 CFR

Proposed Rules:
209....11811
211....11811
266....13225
325....12005
345....11811
416....14191
656....15242

21 CFR

520....14313
522....11964
529....14314
1301....15272
1308....13533, 15088
1311....15272
Proposed Rules:
103....13041
129....13041
165....13041
184....13041
350....15452
876....15119
878....13230

22 CFR

221....14148
514....15180

23 CFR

Proposed Rules:
450....12064, 12084
500....12096
511....12096
626....12096

24 CFR

91....13686
200....13534
201....13950
202....13534
203....12901, 13534, 13950
204....12901
213....13534
234....13534, 13950
236....13007
240....13534
570....13686
582....13884
583....13870
882....13828
905....13916
968....13916
3500....13705

25 CFR

Proposed Rules:
216....15404

26 CFR

1....13409, 13412, 13413, 13706, 14150, 15089, 15274
52....14517
602....13409, 13413
Proposed Rules:
1....14531, 15312, 15313
20....15313
25....15313
26....15314
301....15314
602....14531

27 CFR

9....11964
Proposed Rules:
650....11814

29 CFR

470....15402
1910....15089
2619....13706
2676....13707
Proposed Rules:
103....15314
825....13394
1910....15526
2619....15315
2676....15315
2700....12158

30 CFR

920....15275
Proposed Rules:
56....14492
57....14492
710....15404
715....15404
716....15404
717....15404
750....15404
870....12913
935....15315
938....15456
950....15318, 15319

31 CFR

103....13538
505....13197
550....13198
585....13199

32 CFR

92....13550
988....13007

33 CFR

1....15228

100 ... 13214
110 ... 12539
117 ... 12540, 15419, 15420, 15421
154 ... 13550
155 ... 13708
165 ... 14151, 15089
Proposed Rules:
117 ... 12568

34 CFR

200 ... 11920
230 ... 13176
231 ... 13176
236 ... 13176
238 ... 13176
300 ... 13528
600 ... 13335, 15523
668 ... 14152
682 ... 13335
Proposed Rules:
50 ... 11924
232 ... 15748
649 ... 11928
674 ... 13356
682 ... 13356

36 CFR

Proposed Rules:
242 ... 14350

37 CFR

301 ... 13413
311 ... 13413

38 CFR

3 ... 12174

39 CFR

111 ... 13551
Proposed Rules:
3001 ... 12198

40 CFR

50 ... 13008, 15278, 15281, 15282
52 ... 11967, 14153, 15277, 15422, 15431
55 ... 14157
72 ... 15634
73 ... 15634
75 ... 15634
80 ... 13413, 14476
81 ... 12541, 15422
86 ... 13413
88 ... 11888
180 ... 14314, 14316
261 ... 15284
268 ... 14317
271 ... 12174, 14319, 14321
300 ... 12142, 15287
435 ... 12454
712 ... 13556
716 ... 13556
761 ... 15435
Proposed Rules:
Ch. 1 ... 12199, 12352, 13571, 13730
51 ... 13836
52 ... 12006, 12913, 12914, 13230, 13572, 13575, 14194
61 ... 15457
68 ... 13174
69 ... 13579
82 ... 15014
85 ... 13730
86 ... 13730
93 ... 13836
144 ... 13836, 15320
180 ... 12199, 12200, 13234, 13236, 13238, 13239, 13241
185 ... 13241
186 ... 13241
191 ... 13731, 15320
194 ... 15320
228 ... 12569
302 ... 12876
355 ... 12876
761 ... 12352, 13128

41 CFR

Ch. 301 ... 12890
301–7 ... 12890
302–11 ... 15436

43 CFR

Public Land Orders:
86 ... 11816
6958 ... 11968
6959 ... 14323
Proposed Rules:
3730 ... 12878
3820 ... 12878
3830 ... 12878
3850 ... 12878

44 CFR

64 ... 11968, 14159
65 ... 14323, 15091
67 ... 14325
Proposed Rules:
67 ... 14350

45 CFR

400 ... 11793
1303 ... 13019
1611 ... 12335

46 CFR

10 ... 15228
12 ... 15228
15 ... 13360
25 ... 13364
552 ... 13414
Proposed Rules:
31 ... 15740
32 ... 15740
67 ... 12352

47 CFR

Ch. I ... 14161
0 ... 13019
1 ... 13019, 13708, 14328
2 ... 11795
5 ... 14328
13 ... 12632
21 ... 11795, 13708
22 ... 11799
25 ... 13417
64 ... 12175, 14329
73 ... 12902, 12903, 13423, 13424, 15288, 15289, 15290, 15439, 15440
74 ... 11795
76 ... 11970, 11972
90 ... 12176, 12177
Proposed Rules:
Ch. I ... 12915, 13041, 14367, 15120, 15461
1 ... 14369
2 ... 14532
21 ... 12202, 13708
25 ... 13432, 13433, 14532
32 ... 14535
61 ... 13435
64 ... 12204, 13435, 14371
68 ... 14375
69 ... 12204, 13435
73 ... 12916, 13435, 13436, 13437, 15321, 15461, 15462
76 ... 12917, 12921
90 ... 12205, 15131
74 ... 12011

48 CFR

Ch. 20 ... 12988
22 ... 12140
36 ... 12140
52 ... 12140

49 CFR

1 ... 12543
107 ... 12543
171 ... 12182
173 ... 12904
178 ... 12904
180 ... 12904
192 ... 14519
193 ... 14519
195 ... 14519
501 ... 12545
571 ... 11974, 11975, 12183, 13021, 13023, 13424, 14162, 15463
582 ... 12545
591 ... 12905
1007 ... 15290
Proposed Rules:
23 ... 12207
171 ... 12207
172 ... 12207
173 ... 12207, 12316
178 ... 12316
180 ... 12316
195 ... 12213
571 ... 12921, 13042, 13243, 13424, 15132
613 ... 12064, 12084
614 ... 12096
1056 ... 12573
1312 ... 14198

50 CFR

17 ... 12853, 12864, 14169, 14248, 14330
20 ... 15093
611 ... 14170
625 ... 13560
641 ... 13560
646 ... 11979
652 ... 14340
663 ... 11984
672 ... 11985, 11986, 13214, 13561
674 ... 12336
675 ... 11986, 12336, 13561, 13826, 14172, 14173, 14524, 15291
685 ... 14170
Proposed Rules:
17 ... 11821, 12013, 12353, 12573, 13042, 13244, 13732, 14199, 14537, 14541
100 ... 14350
625 ... 12017, 15463
641 ... 12018, 15132
646 ... 13732
663 ... 14543, 14549

LIST OF PUBLIC LAWS

Note: No public bills which have become law were received by the Office of the Federal Register for inclusion in today's **List of Public Laws**.

Last List March 11, 1993

ELECTRONIC BULLETIN BOARD

Free **Electronic Bulletin Board** Service for Public Law Numbers is available on 202–275–1538 or 275–0920.